Fermilab Library
0 1160 0018381 8
UBCTP-92-029

UBCTP-92-029

Exact Conformal Field Theory Results on the Multi-Channel Kondo Effect: Single-Fermion Green's Function, Self-energy and Resistivity

Ian Affleck[a,b] and Andreas W. W. Ludwig[b,c,*]
[a] *Canadian Institute for Advanced Research and*
[b] *Department of Physics, University of British Columbia, Vancouver, BC, V6T 1Z1, Canada* [c] *Physics Department, Simon Fraser University Burnaby, BC, V5A 1S6, Canada*

A conformal field theory approach has recently been developed for quantum impurity problems including the "overscreened" multi-channel Kondo model. We present the details of our calculation of the single-fermion Green's function. The universal zero-temperature resistivity and leading temperature-dependent term are derived. Effects of particle-hole symmetry breaking are included. We also give our perturbative proof of the "g-theorem" governing the change in residual entropy under a renormalization group flow between two boundary fixed points.

PACS numbers: 75.20.Hr

I. INTRODUCTION AND CONCLUSIONS

We have recently developed a new conformal field theory technique for quantum impurity problems, including the "overscreened" multi-channel Kondo model. [1,2,3,4,5,6,7] In particular, this has led to exact results on Green's functions at low temperatures and frequencies and long distances.[5] The purpose of this paper is to present the details of our results for the single particle Green's function, ie. the self-energy in the dilute impurity approximation. From this self-energy we obtain the resistivity. We also present here, the details of an unrelated result, namely a perturbative proof of our "g-theorem" concerning the residual entropy or "groundstate degeneracy".[4] Our results on two-particle Green's functions will be presented in a separate paper.[8] Since the Green's function calculation is rather long and technical we summarize the results in this section as well as outlining the various steps.

The calculation naturally breaks up into two parts: the zero frequency or temperature behavior and the finite frequency or temperature behavior. The universal zero energy behavior, discussed in Section II, is governed by the boundary fixed point.[9,4,5] In the one-dimensional formulation, we calculate the single-particle left-right Green's function in the presence of the impurity spin. We find that, at low energies and long distances, this simply equals the non-interacting Green's function up to a universal factor, $S_{(1)}$ which may be interpreted as the S-matrix element in the single particle sector, ie. the amplitude for a single electron to scatter elastically off the impurity at zero energy. We find that $|S_{(1)}| < 1$ indicating the occurance of inelastic (one particle into several) scattering at zero energy; this violation of the most basic assumption of Landau's Fermi liquid theory shows that these fixed points are not of Fermi liquid type. For k channels and a spin s impurity, this universal factor is given by:

$$S_{(1)} = \frac{cos[\pi(2s+1)/(2+k)]}{cos[\pi/(2+k)]} \tag{1}$$

$S_{(1)}$ is real as required by time-reversal and particle-hole symmetry. In the large-k limit this becomes:

$$S_{(1)} \rightarrow \left[1 - \frac{s(s+1)(2\pi)^2}{2k^2}\right] + O\left(\frac{1}{k^3}\right) \tag{2}$$

This indicates that the scattering amplitude, and hence the resistivity, vanish as $k \rightarrow \infty$. This is to be expected since the value of the Kondo coupling at the zero temperature fixed point vanishes in this limit. In Appendix A we calculate $S_{(1)}$ to second order of perturbation theory in the Kondo coupling to check our general result in this limit.[10]

We next look, in Section III, at the corrections to this simple form of the single-particle Green's function by doing first order perturbation theory in the leading irrelevant operator at the low-temperature fixed point. We show that these corrections can be interpreted as a frequency and temperature dependent self-energy in the three-dimensional Green's function, in the dilute impurity limit. The leading irrelevant operator, $\mathcal{O}$, has dimension $1 + \Delta$ with $\Delta = 2/(k+2)$. Thus the leading temperature and frequency dependence is of the form $T^{\Delta} f(\omega/T)$ where f is a non-trivial universal scaling function which we compute. This first-order perturbation theory result is obtained from calculating a three-point Green's function at the non-trivial fixed point, $< \psi \mathcal{O} \psi^{\dagger} >$, where ψ is the fermion field. It has the form of an integral over a trigonometric function of $\tau + ir$, where τ is imaginary time and r is the distance from the impurity. It turns out that the result is proportional to a hypergeometric function. [See for example, Ref. (11).] The resulting function must then be Fourier transformed and the analytic continuation of the Matsubara

frequency to real frequency must then be performed. Much of section III is taken up with this straightforward but tedious calculation. Some needed properties of hypergeometric functions are derived in Appendix B. The result for the retarded self-energy is:

$$\Sigma^R(\omega) = -\frac{in_i}{2\pi\nu}\left\{[1 - S_{(1)}] - N\lambda\left(\frac{2\pi}{\beta}\right)^{\Delta} 2\sin(\pi\Delta)\int_0^1 du\left[u^{-i\beta\omega/2\pi}\right.\right.$$
$$\left.\left.\cdot u^{-1/2}(1-u)^{\Delta}F(u) - \frac{\Gamma(1+2\Delta)}{\Gamma^2(1+\Delta)}u^{(\Delta-1)}(1-u)^{-(1+\Delta)}\right]\right\} \tag{3}$$

Here, $F(u) \equiv F(1+\Delta, 1+\Delta; 1; u)$ is a hypergeometric function,[11] Γ is Euler's Gamma function, n_i is the density of impurities, β is the inverse temperature, ν is the density of states per spin per channel and N is a constant:

$$N = \left\{\frac{9}{8}\,\frac{\Gamma^2\left(\frac{k}{k+2}\right)}{\Gamma\left(\frac{k+1}{k+2}\right)\Gamma\left(\frac{k-1}{k+2}\right)\cos\left(\frac{\pi}{k+2}\right)}\,\frac{\cos\left(\frac{2\pi}{2+k}\right) - \cos\left(\frac{2\pi(2s+1)}{2+k}\right)}{1 + 2\cos\left(\frac{2\pi}{2+k}\right)}\right\}^{1/2} \tag{4}$$

λ is the leading irrelevant coupling constant. It is important that Σ^R has both real and imaginary parts, at first order in the leading irrelevant operator. The leading-frequency-dependent part of the zero-temperature self-energy is proportional to ω^{Δ}:

$$\Sigma^R(\omega, T=0) = -\frac{in_i}{2\pi\nu}\left[[1 - S_{(1)}] + 2N\lambda\frac{\sin(\pi\Delta)\Gamma(1+2\Delta)\Gamma(1-\Delta)}{\Delta\Gamma^2(1+\Delta)}\right.$$
$$\left.\cdot\left[\cos(\pi\Delta/2) - i\epsilon(\omega)\sin(\pi\Delta/2)\right]|\omega|^{\Delta}\right] \tag{5}$$

The resistivity can be obtained from $\mathrm{Im}\Sigma^R$ via the Kubo formula. This follows from the fact that we assume purely s-wave scattering so that the contribution from the scattering kernel (ie. the connected four-point Green's function) vanishes upon

angular averaging in the Kubo formula. This argument is reviewed in Appendix C. The resulting resistivity is:

$$\rho(T) = \frac{3n_i[1-S_{(1)}]}{2k\pi(e\nu v_F)^2}\left\{1 - \frac{2N\sin(\pi\Delta)\lambda}{[1-S_{(1)}]}\left(\frac{2\pi}{\beta}\right)^{\Delta}\int_0^1 du\left[\right.\right.$$
$$\left.\left.\cdot|\ln u|(1-u)^{\Delta-1}F(u) - \frac{\Gamma(1+2\Delta)}{\Gamma^2(1+\Delta)}u^{(\Delta-1)}(1-u)^{-(1+\Delta)}\right]\right\} \tag{6}$$

where v_F is the Fermi velocity and e the electron charge. The leading temperature dependent part scales as λT^{Δ}, with $\Delta < 1$. This is quite different than at the Fermi liquid Kondo fixed point which occurs for one-channel. In that case the dimension of the leading irrelevant operator is 2, corresponding to $\Delta = 1$. Importantly, the self-energy is real, to first order in λ, since it simply corresponds to an energy-dependent phase shift, so that the resistivity is second order and therefore $\propto T^2$. This calculation for the Fermi liquid case is reviewed in Appendix D using a slightly different approach than the original one of Nozières. Our approach is based on doing explicit perturbation theory for the self-energy to second order in the leading irrelevant operator and then using the Kubo formula. Our results are exactly equivalent to Nozières'. We stress that the resistivity has a far more singular temperature-dependence in the non Fermi liquid case. The temperature dependent part of the resistivity has a non-universal amplitude, $\propto \lambda$. This same (non-universal) coupling constant appears in the specific heat and susceptibility so that two universal ratios can be formed. These are given by:[3]

$$\frac{C(T)}{V} = \frac{2\pi^2 k}{3}T\left[\nu + n_i\lambda^2 T^{2\Delta-1}\frac{9\pi^{2\Delta+1/2}\Delta^2(k/2+2)\Gamma(1/2-\Delta)}{2k\Gamma(1-\Delta)}\right] \tag{7}$$

and

$$\frac{\chi(T)}{V} = \frac{k(g\mu_B)^2}{2}\left[\nu + n_i\lambda^2 T^{2\Delta-1}\frac{\pi^{2\Delta+1/2}(k/2+2)^2\Gamma(1/2-\Delta)}{k\Gamma(1-\Delta)}\right] \tag{8}$$

where μ_B is the Bohr magneton and g is the gyromagnetic ratio. The impurity contributions to these quantities are second order in λ, unlike the Fermi liquid case, reviewed in Appendix D, where they are first order. This is a consequence of the fact that the leading irrelevant operator is a Virasoro primary field in the non-Fermi liquid case which has a vanishing finite-temperature 1-point function. It is possible to form two independent universal ratios from the specific heat, susceptibility and resistivity, in which λ cancels.

For the case of two channels and an s=1/2 impurity, the zero-temperature self-energy becomes:

$$\Sigma^R(\omega, T=0) = -\frac{in_i}{2\pi\nu}[1 + (24\lambda/\sqrt{2\pi})[1 - i\epsilon(\omega)]|\omega|^{1/2} \tag{9}$$

We evaluate the integral over a hypergeometric function in Equation (6) explicitly, obtaining the resistivity:

$$\rho(T) = \frac{3n_i}{4\pi(e\nu v_F)^2}[1 + 4\lambda\sqrt{\pi T}] \tag{10}$$

In this case the specific heat and susceptibility are given by:

$$\frac{C(T)}{V} = \frac{4\pi^2}{3}T\left[\nu + n_i\lambda^2 \ln(T_K/T)\frac{27\pi}{4}\right] \tag{11}$$

and

$$\frac{\chi(T)}{V} = \frac{k(g\mu_B)^2}{2}\left[\nu + n_i\lambda^2 \ln(T_K/T)18\pi\right] \tag{12}$$

Here the Kondo temperature T_K is given by $\lambda \approx T_K^{-\Delta}$.

The results stated so far assume particle-hole symmetry. Importantly, they assume in particular no potential scattering in addition to the Kondo interaction. However, it is easy to include a potential scattering term. This is considered in Section IV. The important point is that the non-trivial physics all takes place in the spin sector whereas the potential scattering is entirely in the charge sector. It produces a line of fixed points which are obtained by a trivial modification of the charge sector. [This is quite unlike the two-impurity Kondo problem[6] where breaking of particle-hole symmetry restores Fermi liquid behavior.] It has no effect on the low-temperature specific heat or susceptibility. It modifies the self energy by an additional potential-scattering phase shift, δ_P. The resistivity becomes:

$$\rho(T) = \frac{3n_i[1-\cos(2\delta_P)S_{(1)}]}{2k\pi(e\nu v_F)^2}\left\{1 - \frac{\cos(2\delta_P)2N\sin(\pi\Delta)\lambda}{[1-\cos(2\delta_P)S_{(1)}]}\left(\frac{2\pi}{\beta}\right)^{\Delta}\int_0^1 du\left[\right.\right.$$
$$\left.\left.\cdot|\ln u|(1-u)^{\Delta-1}F(u) - \frac{\Gamma(1+2\Delta)}{\Gamma^2(1+\Delta)}u^{(\Delta-1)}(1-u)^{-(1+\Delta)}\right]\right\} \tag{13}$$

Although the universality of the zero-temperature resistivity is spoiled, it is possible, for $k > 2$, to eliminate δ_P by taking ratios of the temperature-independent and temperature-dependent parts of $\rho(T)$. Hence two universal ratios can still be formed from C, χ and ρ. In the special case, $k = 2$, $S_{(1)} = 0$ so the zero-temperature resistivity is independent of δ_P; ie. it is universal even with particle-hole symmetry breaking. δ_P can no longer be eliminated between the zero-temperature and finite-temperature resistivity; it could however be eliminated using a measurement of the thermopower.

In an earlier paper[4] we argued that the (zero temperature) residual entropy contains an impurity term of the form $\ln g$ where, in general, the "groundstate degeneracy", g, is non-integer. We further hypothesized that g always decreases upon renormalization from a less stable to a more stable boundary fixed point. We have

a proof of this hypothesis only in the case where the flow is between two nearby boundary fixed points, induced by a barely relevant operator, of dimension $1-y$ with $0 < y << 1$. We show in Appendix E, that, in this limit, the change in g has the universal form: $\delta g/g = -\pi^2 y^3/3b^2 < 0$ where b is the coefficient of the quadratic term in the β-function of the operator.

II. S-MATRIX

In this section we calculate the S-matrix, or equivalently the electron self-energy at the critical point, to lowest order in the dilute-impurity expansion. This object is very simply defined in terms of the one-particle Green's function.

In the one-dimensional formulation of the Kondo effect, which arises after s-wave projection, we have left and right-moving fermion fields, ψ_L and ψ_R on the positive x-axis. (See Ref. (3), Appendix A.) With our normalizations, the bulk free fermion Green's functions are:

$$\begin{aligned} &< \psi_L^\dagger(z_1)\psi_L(z_2) > = \frac{1}{z_1 - z_2} \\ &< \psi_R^\dagger(\bar{z}_1)\psi_R(\bar{z}_2) > = \frac{1}{\bar{z}_1 - \bar{z}_2} \\ &< \psi_L^\dagger(z_1)\psi_R(\bar{z}_2) > = 0 \end{aligned} \tag{14}$$

Here $z = \tau + ix$. If we impose a boundary condition at $x = 0$ of the form $\psi_R(z) = \psi_L(\bar{z})$, then the left-left and right-right Green's functions remain unaffected but the left-right Green's function becomes:

$$< \psi_L^\dagger(z_1)\psi_R(\bar{z}_2) = \frac{1}{z_1 - \bar{z}_2} \tag{15}$$

More generally, if we impose the boundary condition $\psi_R(z) = e^{i2\delta}\psi_L(\bar{z})$ the Green's function becomes:

$$< \psi_L^\dagger(z_1)\psi_R(\bar{z}_2) = e^{i2\delta}\frac{1}{z_1 - \bar{z}_2} \tag{16}$$

Here δ is the phase shift. For an arbitrary conformally invariant boundary condition the left-left and right-right Green's function is the same as in the bulk, Equation (14), and the left-right Green's function takes the form:

$$< \psi_L^\dagger(z_1)\psi_R(\bar{z}_2) = \frac{S_{(1)}}{z_1 - \bar{z}_2} \tag{17}$$

where $S_{(1)}$ is a universal complex number which depends on the universality class of the boundary conditions. It represents the S (scattering)-matrix restricted to the one-particle subspace right at the Fermi-surface (ie. at zero energy). In general $|S_{(1)}| < 1$ signifying multi-particle scattering (ie. one electron into one electron plus one or more electron-hole pairs). In Fermi liquid theory such multi-particle scattering is assumed to vanish at the Fermi surface. This is true at the local Fermi liquid fixed describing the one-channel Kondo effect. In this case $S_{(1)} = -1$, corresponding to a $\pi/2$ phase shift. At the overscreened Kondo fixed points $|S_{(1)}| < 1$, implying that these are *not* local Fermi liquid fixed points.

$S_{(1)}$ can be readily calculated for an arbitrary conformally invariant boundary condition. Consider an arbitrary left-moving primary field, $O_L^a(z)$, of scaling dimension x with a unit-normalized bulk two-point function:

$$< O_L^a(z_1)\bar{O}_L^a(z_2) >= \frac{1}{(z_1 - z_2)^{2x}} \tag{18}$$

Then, in the presence of a conformally invariant boundary, corresponding to the boundary state, $|A>$, the two-point function of O_L^a with $\bar{O}_R^a$ the conjugate right-moving field is:[9]

$$< O_L^a(z_1)\bar{O}_R^a(\bar{z}_2) >= \frac{< a;0|A >}{< I;0|A >}\frac{1}{(z_1 - \bar{z}_2)^{2x}} \tag{19}$$

Here $|a;0>$ is the direct product of left and right highest weight states corresponding to the operator $O_L^a\bar{O}_R^a$; I labels the identity operator. In the fermion problem, primary operators are labelled by charge, Q, spin, j and flavor representation ρ quantum numbers. Thus the fermion operator has quantum numbers $Q = 1$, $j = 1/2$ and $\rho = k$ (the fundamental representation of the $SU(k)$ flavor group). Therefore we find;

$$S_{(1)} =< 1, 1/2, k; 0|A > / < 0, 0, I; 0|A > \tag{20}$$

If we consider the trivial free fermion boundary state, $|F>$, corresponding to the boundary condition $\psi_R(\bar{z}) = \psi_L(z)$, then we must have:

$$1 =< 1, 1/2, k; 0|F > / < 0, 0, I; 0|F > \tag{21}$$

Thus letting $|K>$ represent the Kondo boundary state describing the non-trivial conformally invariant boundary condition arising at the low-temperature fixed point in the Kondo effect, we may write:

$$S_{(1)} = \frac{< 1, 1/2, k; 0|K > / < 1, 1/2, k; 0|F >}{< 0, 0, I; 0|K > / < 0, 0, I; 0|F >} \tag{22}$$

The latter form is useful because the ratios of Kondo to free fermion matrix elements can be calculated simply using a formula due to Cardy,[9] relating boundary state matrix elements to the spectrum, our "fusion rule hypothesis"[2,3] and the Verlinde formula.[14] Cardy's formula states:[9]

$$\sum_b S^a_b n^b_{AB} =< A|a;0 >< a;0|B > \tag{23}$$

Here S^a_b is the "modular S-matrix" representing a modular transformation on the characters. (This name is rather unfortunate since the "modular S-matrix" is *not* the scattering-matrix.) n^a_{AB} is the number of times that the ath conformal tower appears in the spectrum with conformally invariant boundary conditions corresponding to the boundary states $|A>$ and $|B>$ at the two ends of a finite line. Our fusion rule hypothesis states[2,3] that the spectrum with one free and one Kondo boundary condition is related to that with two free boundary conditions by:

$$n^{Q,j,\rho}_{FK} = \sum_{j'} N^j_{j's} n^{Q,j',\rho}_{FF} \tag{24}$$

where $N^j_{j's}$ is the fusion rule coefficient for the $SU(2)$ level k theory, giving the number of distinct ways that the representation j occurs in the operator product expansion of two fields transforming according to the representations j' and s, respectively. (s is the spin of the impurity.) This hypothesis, which is a natural result of "completing the square" when the Kondo interaction is written in terms of currents, has been extensively checked against numerical renormalization group results for the finite-size spectrum[3,7] and Bethe ansatz results for the residual entropy[15]. Combining these two formulas and writing the modular S-matrix as a product of charge, spin and flavor parts we obtain:

$$\sum_{Q,j',\rho';j''} S^Q_{Q'} S^j_{j'} S^\rho_{\rho'} N^{j'}_{j''s} n^{Q'j''\rho'}_{FF} =< F|Q,j,\rho;0 >< Q,j,\rho;0|K > \tag{25}$$

Finally we use the Verlinde formula[14] which relates the modular S-matrix to the fusion rule coefficients:

$$\sum_{j'} N^{j'}_{j''s} S^{j}_{j'} = S^{j}_{j''} S^{j}_{s} / S^{j}_{0} \tag{26}$$

Using Equation (26), Equation (25) can be simplified to:

$$(S^{j}_{s}/S^{j}_{0}) \sum_{Q',j'',\rho'} S^{Q}_{Q'} S^{j}_{j''} S^{\rho}_{\rho'} n^{Q'j''\rho'}_{FF} =< F|Q,j,\rho;0 >< Q,j,\rho;0|K > \tag{27}$$

Using Equation (23) once again with $A = B = F$, we obtain our final result:

$$< Q,j,\rho;0|K > / < Q,j,\rho;0|F >= S^{j}_{s}/S^{j}_{0} \tag{28}$$

Thus any matrix element of the Kondo state can be expressed in terms of the corresponding free matrix element and the modular S-matrix. This is given by:[16]

$$S^{j}_{j'} = \sqrt{2/(2+k)} sin[\pi(2j+1)(2j'+1)/(2+k)] \tag{29}$$

We may now use this result to calculate the scattering matrix at the Kondo fixed point. Substituting Equations (28) and (29) into Equation (22) we obtain:

$$S_{(1)} = \frac{S^{1/2}_{s}/S^{1/2}_{0}}{S^{0}_{s}/S^{0}_{0}} = \frac{cos[\pi(2s+1)/(2+k)]}{cos[\pi/(2+k)]} \tag{30}$$

Since $k \geq 2s$, $|S_{(1)}| \leq 1$, as expected. $S_{(1)}$ is real, as required by particle-hole and time-reversal symmetries. Furthermore, in the exactly screened case, $k = 2s$, $S_{(1)} = -1$, corresponding to a Fermi liquid fixed point with a $\pi/2$ phase shift. [If $k < 2s$, the impurity is underscreened; ie. reduced to size $s - k/2$, and we must replace s by $k/2$ in Equation (30). Thus we again obtain $S_{(1)} = -1$.] We also note that, in the limit $k \to \infty$ with s held fixed, $S_{(1)} \to 1$. This reflects the fact that

the stable fixed point occurs at weak Kondo coupling in this limit. We show[10] in Appendix A that Equation (30) agrees with a perturbative calculation of $S_{(1)}$ to $O(1/k^2)$.

III. TEMPERATURE DEPENDENCE OF THE RESISTIVITY AND THE LEADING IRRELEVANT OPERATOR

The calculation of the S-matrix in the previous section can also be regarded as a calculation of the self-energy for three-dimensional electrons propagating in a dilute ensemble of magnetic impurities. To see this, let us first consider the three-dimensional Green's function in the presence of a single impurity, located at the origin. We consider the imaginary time, time-ordered finite-temperature Green's function. It turns out to be convenient to work in a mixed representation where we Fourier transform with respect to imaginary time, but not space. The Fourier modes occur at the Matsubara frequencies;

$$\omega_n \equiv 2\pi(n + 1/2)T \tag{31}$$

The non-interacting Green's function is given by:

$$\begin{aligned} G^0(\omega_n, \vec{r}) &\equiv -\int_0^\beta d\tau e^{i\omega_n \tau} < \psi(\tau, \vec{r})\psi^\dagger(0, \vec{0}) > \\ &= \int \frac{d^3\vec{p}}{(2\pi)^3} \frac{e^{i\vec{p}\cdot\vec{r}}}{i\omega_n - \epsilon_{\vec{p}}} \end{aligned} \tag{32}$$

In the critical region, $r \to \infty$, $\omega_n \to 0$, we may approximate the dispersion relation by:

$$\epsilon_{\vec{p}} \approx v_F(p - p_F) \equiv v_f p' \tag{33}$$

and take the limits of integration to ∞ for p'. Thus we obtain:

$$G^0(\omega_n, \vec{r}) \approx \frac{p_F}{4\pi^2 ir}\left[e^{ip_F r}\int_{-\infty}^{\infty}\frac{dp'\, e^{ip'r}}{i\omega_n - v_F p'} - e^{-ip_F r}\int_{-\infty}^{\infty}\frac{dp'\, e^{-ip'r}}{i\omega_n - v_F p'}\right] \tag{34}$$

These integrals can be evaluated exactly from the residue theorem. Noting that, since $r > 0$, the first integral may be closed in the upper half plane and the second in the lower, and setting $v_F = 1$, we find:

$$G^0(\omega_n, \vec{r}) \approx -\frac{p_F}{2\pi r}\left[e^{ip_F r}e^{-\omega_n r}\theta(\omega_n) + e^{-ip_F r}e^{\omega_n r}\theta(-\omega_n)\right] \tag{35}$$

Alternatively, we may decompose the three-dimensional fermion annihilation operator:

$$\Psi(\vec{r}) = \int \frac{d^3\vec{p}}{(2\pi)^{3/2}} e^{i\vec{p}\cdot\vec{r}}\Psi(\vec{p}) \tag{36}$$

into spherical harmonics. Only the s-wave component interacts with a δ-function impurity. The s-wave part is:

$$\Psi(\vec{r}) = \frac{1}{i2\sqrt{2}\pi r}\left[e^{ip_F r}\psi_R(r) - e^{-ip_F r}\psi_L(r)\right] \tag{37}$$

where $\psi_{L,R}$ are one-dimensional left and right-moving fields. [See Appendix A of Reference (3) but note that left and right-movers are defined using the opposite convention in Equation (A.8, A.9).] The non-interacting one-dimensional Green's function for left-movers is:

$$\begin{aligned} G_L^0(\omega_n, x) &= -\int_0^\beta d\tau e^{i\omega_n \tau} < \psi_L(\tau + ix)\psi_L^\dagger(0) > \\ &= \int_{-\infty}^{\infty} dp\, \frac{e^{ipx}}{i\omega_n + p} \\ &= 2\pi i e^{\omega_n x}[\theta(-\omega_n)\theta(x) - \theta(\omega_n)\theta(-x)] \end{aligned} \tag{38}$$

(Note the factor of 2π arising from the unconventional normalization of the fermion operators and recall that $\epsilon(p) = -p$ for left-movers.) The decomposition into spherical harmonics implies[3] the boundary condition:

$$\psi_L(0) = \psi_R(0) \tag{39}$$

and hence, $\psi_R(r) = \psi_L(-r)$. Thus the four Green's functions in the non-interacting theory are:

$$\begin{aligned}
G^0_{LL}(\omega_n, r_1, r_2) &\equiv -\int_0^\beta d\tau e^{i\omega_n\tau} < \psi_L(\tau, r_1)\psi^\dagger_L(0, r_2) >_0 = G^0_L(\omega_n, r_1 - r_2) \\
G^0_{RR}(\omega_n, r_1, r_2) &\equiv -\int_0^\beta d\tau e^{i\omega_n\tau} < \psi_R(\tau, r_1)\psi^\dagger_R(0, r_2) >_0 = G^0_L(\omega_n, r_2 - r_1) \\
G^0_{LR}(\omega_n, r_1, r_2) &\equiv -\int_0^\beta d\tau e^{i\omega_n\tau} < \psi_L(\tau, r_1)\psi^\dagger_R(0, r_2) >_0 = G^0_L(\omega_n, r_1 + r_2) \\
G^0_{RL}(\omega_n, r_1, r_2) &\equiv -\int_0^\beta d\tau e^{i\omega_n\tau} < \psi_R(\tau, r_1)\psi^\dagger_L(0, r_2) >_0 = G^0_L(\omega_n, -r_1 - r_2)
\end{aligned} \tag{40}$$

To calculate the three-dimensional Green's function with the impurity at the origin, we may decompose into spherical harmonics and use the fact that only the s-wave harmonic is modified from its non-interacting value. Furthermore, only the left-right and right-left parts of the s-wave Green's function are modified, as we saw in the previous section and will be shown more generally below. Hence:

$$\begin{aligned}
&G(\omega_n, \vec{r}_1, \vec{r}_2) - G^0(\omega_n, \vec{r}_1 - \vec{r}_2) \\
&= \frac{-1}{8\pi^2 r_1 r_2}\Big\{ e^{-ip_F(r_1+r_2)}\left[G_{LR}(\omega_n, r_1, r_2) - G^0_{LR}(\omega_n, r_1, r_2)\right] \\
&+ e^{ip_F(r_1+r_2)}\left[G_{RL}(\omega_n, r_1, r_2) - G^0_{RL}(\omega_n, r_1, r_2)\right]\Big\}
\end{aligned} \tag{41}$$

Here G_{LR} and G_{RL} are the left-right and right-left Green's functions defined as in Equation (40) but for the interacting theory. Using the fact that the LR Green's function in the presence of the impurity only differs from the non-interacting case by a factor, $S_{(1)}$, and using the explicit form of the non-interacting Green's function, Equation (38), (40), this becomes:

$$\begin{aligned} &G(\vec{r}_1, \vec{r}_2; \omega_n) - G^0(\vec{r}_1 - \vec{r}_2; \omega_n) \\ &= \frac{i[S_{(1)} - 1]}{4\pi r_1 r_2} \left[e^{ip_F(r_1+r_2)} e^{-\omega_n(r_1+r_2)} \theta(\omega_n) - e^{-ip_F(r_1+r_2)} e^{\omega_n(r_1+r_2)} \theta(-\omega_n) \right] \end{aligned} \quad (42)$$

Finally we observe that the correction to the three-dimensional Green's function coming from the impurity takes the form:

$$G(\vec{r}_1, \vec{r}_2; \omega_n) - G^0(\vec{r}_1 - \vec{r}_2; \omega_n) = G^0(\vec{r}_1; \omega_n) T(\omega_n) G^0(-\vec{r}_2; \omega_n) \quad (43)$$

where the T-matrix, $T(\omega_n)$ is given by:

$$T(\omega_n) = -\frac{i\pi(1 - S_{(1)})}{p_F^2} \epsilon(\omega_n) = -\frac{i(1 - S_{(1)})}{2\pi\nu} \epsilon(\omega_n) \quad (44)$$

$\epsilon(x)$ is the step function; ν is the density of states, per spin per flavor.

For a dilute random array of impurities of density n_i, we obtain, to lowest order in n_i:

$$G(\vec{r}_1, \vec{r}_2; \omega_n) - G^0(\vec{r}_1 - \vec{r}_2; \omega_n) \approx n_i \int d^3\vec{r}_i G^0(\vec{r}_1 - \vec{r}_i; \omega_n) T(\omega_n) G^0(\vec{r}_i - \vec{r}_2; \omega_n) \quad (45)$$

The averaging over impurity location has restored translation invariance. Summing over multi-impurity terms[17] and ignoring inter-impurity interactions the Green's function takes the standard form:

$$G(\vec{k},\omega_n) \approx \frac{1}{i\omega_n - \epsilon_k - \Sigma(\omega_n)} \tag{46}$$

where:

$$\Sigma(\omega_n) = n_i T(\omega_n) \tag{47}$$

is the self-energy for a dilute random array of impurities, to first order in n_i. By considering the Green's function in the presence of two or more impurities we could, in principle, calculate the interaction terms which give corrections to the self-energy as a power series in n_i. The above result is correct up to corrections of $O(n_i^2)$ and thus would appear to be reliable for a dilute system. However, it may well be that these terms of higher order in n_i have increasingly more singular temperature (or frequency) dependence. (The situation may be worse than in the single channel case.) Thus our dilute impurity results may only be valid in some intermediate temperature range, low enough to be in the critical region for a single impurity but high enough that the multi-impurity interaction effects are small. Furthermore it is clearly neccessary that the average inter-impurity separation be large compared to the Kondo length scale, v_F/T_K. It is, to say the least, highly problematic whether any real material could be studied in this regime. The effect of these inter-impurity interactions is therefore very important and we are currently considering them. However, they lie outside the scope of the present article.

The retarded self-energy is obtained by continuing the imaginary frequency to the real axis, from the upper half-plane:[17] $i\omega_n \to \omega + i\eta$, $\eta \to 0^+$. This gives: $\epsilon(\eta + i\omega) = \epsilon(\eta) = 1$, so:

$$\Sigma^R(\omega) = -\frac{in_i[1 - S_{(1)}]}{2\pi\nu} \tag{48}$$

The self-energy is pure imaginary and is interpreted as the single-particle scattering rate,

$$\frac{1}{\tau} = -2\mathrm{Im}\Sigma^R = \frac{n_i[1 - S_{(1)}]}{\pi\nu} \tag{49}$$

Note that the retarded self-energy is independent of T and ω.

To obtain finite frequency and finite temperature corrections we must consider contributions from irrelevant boundary operators. The T or ω dependence can be determined by simple scaling arguments. If the leading irrelevant boundary operator has dimension $1 + \Delta$, then the corresponding coupling constant, λ, has dimension $-\Delta$. [Recall that boundary operators are effectively multiplied by $\delta(x)$, modifying the usual (1+1)dimensional scaling arguments.] We may replace λ by $1/T_K^{\Delta}$. Thus we expect the leading temperature dependence of the self-energy to be:

$$\Sigma(T) - \Sigma(0) \propto (T/T_K)^{\Delta} \tag{50}$$

and similary for the frequency dependence. To determine the scattering rate we must find the leading temperature (and frequency) dependence of the imaginary part of Σ^R. For the one-channel, Fermi liquid case, $\Delta = 1$. It turns out that the leading correction to the self-energy, of $O(T/T_K)$, is purely real in this case. (See Appendix D.) The leading temperature-dependence of the imaginary part comes from second order perturbation theory in the leading irrelevant operator and hence is $O\left[(T/T_K)^2\right]$. This calculation of the scattering rate or conductivity was first performed by Nozières [12] using an equivalent method involving the Boltzmann equation and an energy and density-dependent phase shift. We repeat it in Appendix D using our Green's function approach and the Kubo formula in order to check our methods.

It turns out that, for the non-Fermi liquid fixed points, the term of $O\left[(T/T_K)^{\Delta}\right]$ is complex, contributing to both real and imaginary parts of Σ. Thus the scattering rate has much more singular temperature and frequency dependence in the non-Fermi liquid cases.

We now proceed to an explicit evaluation of this correction to the self-energy in the overscreened case for general s and k with $k > 2s$. There are two reasons to do this. First of all, it will confirm that this term is indeed complex. Furthermore it allows for an actual evaluation of the amplitude of this term, up to one unknown factor, the leading irrelevant coupling constant, λ. Since the same coupling constant determines the impurity specific heat and susceptibility, this amplitude is completely determined if either of these thermodynamic quantities are known. ie. the ratio $[\Sigma(\omega, T)]^2/C_{imp}(T)$ is universal for $k > 2$, like the Wilson ratio. [For $k = 2$, $C_{imp}(T) \propto \ln(T/T_K)$, so the ratio is universal up to this logarithmic dependence on T_K.]

The leading irrelevant operator at the non-Fermi liquid fixed points is always, $\vec{J}_{-1} \cdot \vec{\phi}$, where $\vec{\phi}$ is the spin-one primary field of dimension $\Delta = 2/(2+k)$, defined to have a unit-normalized two-point function:

$$< \phi^a(\tau_1)\phi^b(\tau_2) >= \frac{\delta^{ab}}{(\tau_1 - \tau_2)^{2\Delta}} \tag{51}$$

and $\vec{J}_{-1}$ is the Kac-Moody raising operator. $\vec{J}_{-1} \cdot \vec{\phi}$ has dimension $1 + \Delta$. Writing the perturbation term in the imaginary time action as:

$$\delta S = \lambda \int d\tau \vec{J}_{-1} \cdot \vec{\phi} \tag{52}$$

the leading correction to the left-right single particle Green's function is:

$$\delta G^{\beta j}_{LR\alpha i} \equiv \delta^\beta_\alpha \delta^i_j \delta G_{LR}(z_1, \bar{z}_2) = \lambda \int_0^\beta d\tau \mathcal{T} < \psi_{Li\alpha}(z_1) \vec{J}_{-1} \cdot \vec{\phi}(\vec{0}, \tau) \psi^{\dagger, j\beta}_R(\bar{z}_2) > \quad (53)$$

Here $\mathcal{T}$ signifies time-ordering. This three-point function is completely specified by conformal invariance up to an overall constant, N, which is determined by the boundary state:

$$\delta G_{LR} = i\lambda N \left(\frac{\pi}{\beta}\right)^{2+\Delta} \int_0^\beta \frac{d\tau \left[i sin \frac{\pi}{\beta}(\bar{z}_2 - z_1)\right]^\Delta}{\left[sin\left(\frac{\pi}{\beta}(\tau - z_1)\right) sin\left(\frac{\pi}{\beta}(\tau - \bar{z}_2)\right)\right]^{1+\Delta}} \quad (54)$$

We determine the normalization constant, N, appearing in this three-point function as follows: $\vec{J}_{-1} \cdot \vec{\phi}$ has the zero temperature two-point function (see Ref. 3, p. 665, footnote) :

$$< \vec{J}_{-1} \cdot \vec{\phi}(\tau_1) \vec{J}_{-1} \cdot \vec{\phi}(\tau_2) >= \frac{3(k/2+2)}{|\tau_1 - \tau_2|^{2(1+\Delta)}} \quad (55)$$

The operator $\vec{J}_{-1} \cdot \vec{\phi}$ occurs in the boundary operator product expansion (OPE) of $\psi_L(z_1)$ with $\psi^\dagger_R(\bar{z}_2)$:

$$\psi_{Li\alpha}(z_1) \psi^{\dagger i\alpha}_R(\bar{z}_2) \rightarrow iC[i(\bar{z}_2 - z_1)]^\Delta \vec{J}_{-1} \cdot \vec{\phi} + ... \quad (56)$$

Comparing with Equations (54) (in the zero-temperature limit) and (55) we see that the normalization constant, N, is proportional to the OPE coefficient, C: $N = 3(k/2+2)C/2k$. The OPE coefficient can be determined from the exact two-particle Green's function $< \psi_{L\alpha i}(z_1) \psi^{\dagger \alpha i}_R(\bar{z}_1) \psi_{R\beta j}(\bar{z}_2) \psi^{\dagger \beta j}_L(z_2) >$ which we have determined at the Kondo fixed point.[8] We take the double limit $r_1 \rightarrow 0$, $r_2 \rightarrow 0$ and use the boundary OPE twice, giving:

$$< \psi_{L\alpha i}(z_1)\psi_R^{\dagger\alpha i}(\bar{z}_1)\psi_{R\beta j}(\bar{z}_2)\psi_L^{\dagger\beta j}(z_2) >\rightarrow |C|^2(4r_1r_2)^{\Delta}\frac{3(k/2+2)}{|\tau_1-\tau_2|^{2(1+\Delta)}} \tag{57}$$

for $k > 2$.

This Green's function, which is calculated in Reference (8) has the expected dependence on $r_1, r_2, \tau_1 - \tau_2$. From it we extract the value of

$$|N|^2 = \frac{9}{8}\frac{\Gamma^2\left(\frac{k}{k+2}\right)}{\Gamma\left(\frac{k+1}{k+2}\right)\Gamma\left(\frac{k-1}{k+2}\right)\cos\left(\frac{\pi}{k+2}\right)}\frac{\cos\left(\frac{2\pi}{2+k}\right)-\cos\left(\frac{2\pi(2s+1)}{2+k}\right)}{1+2\cos\left(\frac{2\pi}{2+k}\right)} \tag{58}$$

where $\Gamma(x)$ is Euler's Gamma function. This is the only place where the size of the impurity spin, s, enters into the leading temperature dependent term in the resistivity (namely via the boundary state).

In the special case $k = 2$ $s = 1/2$, there is another singlet operator with the same dimension, 3/2, as $\vec{J}_{-1}\cdot\vec{\phi}$, namely the equivalent operator in the flavor sector, $J^A_{-1}\phi^A$. ($A = 1, 2, 3$ labels a vector in flavor space.) Denoting the corresponding OPE coefficient by C', the Green's function now becomes:

$$< \psi_{L\alpha i}(z_1)\psi_R^{\dagger\alpha i}(\bar{z}_1)\psi_{R\beta j}(\bar{z}_2)\psi_L^{\dagger\beta j}(z_2) >\rightarrow (|C|^2+|C'|^2)(4r_1r_2)^{1/2}\frac{9}{|\tau_1-\tau_2|^3} \tag{59}$$

Clearly we need another equation to determine both C and C'. This is provided by the other two-point function which we have also calculated exactly:[8]

$$< \psi_{L\alpha i}(z_1)\psi_R^{\dagger\alpha i}(\bar{z}_1)\psi_{L\beta j}(z_2)\psi_R^{\dagger\beta j}(\bar{z}_2) > \tag{60}$$

In the corresponding boundary limit this becomes:

$$< \psi_L^{\dagger\alpha i}(z_1)\psi_{R\alpha i}(\bar{z}_1)\psi_L^{\dagger\beta j}(z_2)\psi_{R\beta j}(\bar{z}_2) >\rightarrow (C^2+C'^2)(4r_1r_2)^{1/2}\frac{9}{|\tau_1-\tau_2|^{2(1+\Delta)}} \tag{61}$$

Our explicit calculation[8] shows that the second Green's function vanishes for $k = 2$ (after tracing over indices as indicated). This implies $C^2 = -C'^2$. The first Green's function is non-vanishing; from it we extract the value of $|N|^2 = 9/8$, the same value which would follow from Equation (58).

The phase of C, and hence N, can be determined using the product of time-reversal and charge conjugation (particle-hole) symmetry, CT. We set $\tau = 0$. CT maps $\psi_L(r) \to \psi_R^\dagger(r)$ and hence maps $\psi_L^\dagger(r)\psi_R(r)$ into minus itself. On the other hand $\vec{J}_{-1} \cdot \vec{\phi}$ is even under CT. (This must be the case since this operator appears in the effective Lagrangian, a fact verified by the logarithmic behavior of the impurity susceptibility observed in the Bethe ansatz solution.[18]) Taking into account that CT is anti-unitary (complex conjugates C-numbers) we see that:

$$\psi_L^\dagger(r)\psi_R(r) \to iC[i(\bar{z}_2 - z_1)]^\Delta \vec{J}_{-1} \cdot \vec{\phi} \tag{62}$$

is indeed consistent with CT , if the constant, C is real. The *sign* of C is not determined. This is of no consequence here since the sign of $\vec{J}_{-1} \cdot \vec{\phi}$ is not fixed anyway. For convenience we choose the sign of this operator so that $C > 0$, $N > 0$.

The rest of this section will be concerned with Fourier transforming the above expression, showing that it corresponds again to a T-matrix insertion as in Equation (43), extracting an explicit expression for the T-matrix or self-energy, analytically continuing to real frequency and then calculating the $T = 0$ lifetime and the $\omega = 0$ resistivity.

The first step is to rewrite the denominator in Equation (54) using a trigonometic identity:

$$sin\frac{\pi}{\beta}(\tau - z_1)sin\frac{\pi}{\beta}(\tau - \bar{z}_2)$$

$$= \frac{1}{2}\left[cos\frac{\pi}{\beta}[\tau_1 - \tau_2 + i(r_1 + r_2)] - [cos\frac{\pi}{\beta}[2\tau - \tau_1 - \tau_2 + i(r_2 - r_1)]\right] \quad (63)$$

Clearly we may shift the integration variable, τ by $(\tau_1 + \tau_2)/2$ to eliminate this term from the argument of the second cosine on the right-hand side of Equation (63). Note that the zeros of the denominator in Equation (54) in the complex τ plane occur when $\mathrm{Im}\tau = ir_1$ or $\mathrm{Im}\tau = -ir_2$. Therefore it is further possible to displace the τ integral into the complex plane by $i(r_1 - r_2)/2$ without encountering a singularity since $-r_2 < (r_1 - r_2)/2 < r_1$. This has the advantage that the only dependence of the integrand on z_1 and $\bar{z}_2$ is via the quantity:

$$w \equiv exp\left[i\frac{2\pi}{\beta}(z_1 - \bar{z}_2)\right] \quad (64)$$

We also see that $\delta G_{LL} = \delta G_{RR} = 0$, as required for the corrections to the three-dimensional Green's function to correspond to a T-matrix insertion. δG_{LL} is proportional to the same integral, Equation (54), but with $r_2 \to -r_2$. Now all zeroes of the denominator occur at $\mathrm{Im}\tau = ir_1$ or $\mathrm{Im}\tau = ir_2$, in the upper half plane. Consequently the integration contour can be deformed to $\mathrm{Im}\tau \to -\infty$ without encountering a singularity; hence the integral vanishes. In the case of δG_{RR} all poles are in the lower half-plane so the integral again vanishes. This argument can be trivially extended to show that δG_{LL} and δG_{RR} vanish to all orders in perturbation theory in all irrelevant operators. A general term involves n insertions of irrelevant operators at $z_i = \tau_i$. Since both fermion fields are on the same side of the boundary for δG_{LL} and δG_{RR} we may analytically continue all the z_i integration contours to $z_i = \tau_i + ir_i$ with $r_i \to \mp\infty$ without encountering a singularity.

It is also convenient to introduce the angular integration variable, $\theta \equiv 2\pi\tau/\beta$, in terms of which the Green's function becomes:

$$\delta G_{LR} = i\frac{N}{2}\lambda\left[\frac{w^{-1/2}-w^{1/2}}{2}\right]^{\Delta}\left(\frac{2\pi}{\beta}\right)^{1+\Delta}\int_0^{2\pi}\frac{d\theta}{\left[\frac{1}{2}\left(w^{1/2}+w^{-1/2}\right)-cos\theta\right]^{1+\Delta}} \quad (65)$$

By extracting a factor of $\left(2w^{1/2}\right)^{(1+\Delta)}$ we may express δG_{LR} in terms of a hypergeometric function:[11]

$$\delta G_{LR} = i\frac{N}{2}\lambda\left(\frac{2\pi}{\beta}\right)^{1+\Delta} 2w^{1/2}(1-w)^{\Delta}2\pi F(1+\Delta,1+\Delta;1,w) \quad (66)$$

where

$$F(1+\Delta,1+\Delta;1,w) \equiv \frac{1}{2\pi}\int_0^{2\pi}\frac{d\theta}{[w+1-2w^{1/2}cos\theta]^{1+\Delta}} \quad (67)$$

(We will generally suppress the first three arguments of the hypergeometric function writing simply $F(w)$.) The next step is to Fourier transform with respect to τ_1. Since w is periodic in τ_1 and $F(w)$ is analytic near $w = 0$, we see that δG_{LR} has Fourier modes, $\omega_n \equiv 2\pi(n+1/2)/\beta$. The Fourier transform may be written as a contour integral over w:

$$\delta G_{LR}(r_1,r_2;\omega_n) \equiv \int d\tau_1 e^{i\omega_n\tau_1}\delta G_{LR}(r_1,r_2;\tau_1-\tau_2) \quad (68)$$

$$= i2\pi N\lambda\left(\frac{2\pi}{\beta}\right)^{\Delta} e^{\omega_n(r_1+r_2)}\oint\frac{dw}{iw}w^{n+1/2}w^{1/2}(1-w)^{\Delta}F(w) \quad (69)$$

The integration contour is a circle of radius $e^{-2\pi(r_1+r_2)/\beta} < 1$. Since the hypergeometric function is analytic for $|w| < 1$ we see that $\delta G_{LR}(r_1,r_2,\omega_n)$ vanishes for $\omega_n > 0$ as required for it to correspond to a three-dimensional T-matrix insertion. We obtain an analogous expression for $\delta G_{RL}(r_1,r_2;\omega_n)$. The constant N of Equation (54) takes on a different value in this case, ie. we do *not* obtain δG_{RL}

by simply analytically continuing δG_{LR} across the boundary. In the presence of a boundary condition the function can be non-analytic at the boundary. δG_{RL} can be determined instead from time-reversal invariance:

$$\delta G_{LR}(r,r) = \delta G_{RL}(r,r)^* \tag{70}$$

This implies that δG_{RL} can be written as in Equation (54) with the replacements $1 \leftrightarrow 2$ and $N \to -N$. We see that δG does indeed have the form of a T-matrix insertion, Equation (43)) with

$$\Sigma(\omega_n) = n_i T(\omega_n) = -\frac{n_i}{2\pi\nu}\Bigg[i[1 - S_{(1)}]\epsilon(\omega_n) - iN\lambda\left(\frac{2\pi}{\beta}\right)^{\Delta} \oint \frac{dw}{iw}\Big[-\theta(\omega_n)w^{-\beta\omega_n/2\pi} + \theta(-\omega_n)w^{\beta\omega_n/2\pi}\Big] \cdot w^{1/2}(1-w)^{\Delta}F(w)\Bigg] \tag{71}$$

Note that this leading correction has the expected scaling form T^{Δ} times a function of ω_n/T.

To proceed we must consider the analyticity properties of the integrand in more detail. $F(w)$ is analytic everywhere except for a cut along the real axis from $w = 1 \to \infty$. This is discussed in some detail in Appendix B. On either side of the cut it takes the value:

$$lim_{\epsilon \to 0^+} F(w \pm i\epsilon) = c(w) + e^{\pm i\pi\Delta} d(w) \tag{72}$$

The function $c(w)$ can be conveniently expressed as:

$$c(w) = w^{-(1+\Delta)} F(w^{-1}) \tag{73}$$

Thus the integrand, $w^{-(n+1)}(1-w)^{\Delta}F(w)$, is also analytic everywhere except for

a cut at the same location and an $(n+1)$ order pole at the origin. It vanishes as $|w| \to \infty$ as $|w|^{-(n+2)}$. In order to perform the analytic continuation to real frequency, it is convenient to deform the integration contour to lie on either side of the cut. (See Figure 1.) Along the cut,

$$lim_{\epsilon \to 0+}(1 - w \mp i\epsilon)^{\Delta} \to e^{\mp i\pi\Delta}(w-1)^{\Delta} \tag{74}$$

and therefore the discontinuity across the cut of $(1-w)^{\Delta}F(w)$ is proportional to $c(w)$, independent of $d(w)$. The integral along the cut diverges at $w \to 1$. This is cut off by the circular section of the contour surrounding the branch point at 1. (See Figure 1.) It is convenient to include this by a subtraction of the integrand, giving:

$$\begin{aligned}\Sigma(\omega_n) = &-\frac{in_i\epsilon(\omega_n)}{2\pi\nu}\Bigg[[1 - S_{(1)}] \\ &-N\lambda\left(\frac{2\pi}{\beta}\right)^{\Delta} 2sin\pi\Delta \int_{1+\epsilon}^{\infty} \frac{dw}{w} w^{-\beta|\omega_n|/2\pi} w^{1/2}(w-1)^{\Delta}c(w) + ...\Bigg]\end{aligned} \tag{75}$$

where the ... represents the subtraction due to the circular section of the contour. As $w \to 1$,

$$c(w) = w^{-(1+\Delta)}F(w^{-1}) \to \frac{\Gamma(1+2\Delta)}{\Gamma^2(1+\Delta)}(w-1)^{-(1+2\Delta)} + O[(w-1)^{-2\Delta}] \tag{76}$$

Thus, using Equation (73), the subtracted expression becomes:

$$\begin{aligned}\Sigma(\omega_n) = -\frac{in_i\epsilon(\omega_n)}{2\pi\nu}\Bigg\{[1 - S_{(1)}] - N\lambda\left(\frac{2\pi}{\beta}\right)^{\Delta} 2sin(\pi\Delta)\int_1^{\infty} dw\Bigg[w^{-\beta|\omega_n|/2\pi} \\ \cdot w^{-(3/2+\Delta)}(w-1)^{\Delta}F(w^{-1}) - \frac{\Gamma(1+2\Delta)}{\Gamma^2(1+\Delta)}(w-1)^{-(1+\Delta)}\Bigg]\Bigg\}\end{aligned} \tag{77}$$

It is convenient to change variables, $u \equiv 1/w$, giving our final expression for the self-energy:

$$\Sigma(\omega_n) = -\frac{in_i\epsilon(\omega_n)}{2\pi\nu}\left\{[1 - S_{(1)}] - N\lambda\left(\frac{2\pi}{\beta}\right)^{\Delta} 2\sin(\pi\Delta)\int_0^1 du\left[u^{\beta|\omega_n|/2\pi}\right.\right.$$
$$\left.\left.\cdot u^{-1/2}(1-u)^{\Delta}F(u) - \frac{\Gamma(1+2\Delta)}{\Gamma^2(1+\Delta)}u^{(\Delta-1)}(1-u)^{-(1+\Delta)}\right]\right\} \tag{78}$$

The analytic continuation to real frequencies can now be made. Using:

$$\epsilon(\omega_n)u^{\beta|\omega_n|/2\pi} \equiv \left[\theta(\omega_n)u^{\beta\omega_n/2\pi} - \theta(-\omega_n)u^{-\beta\omega_n/2\pi}\right] \rightarrow u^{-i\beta\omega/2\pi} \tag{79}$$

we obtain:

$$\Sigma^R(\omega) = -\frac{in_i}{2\pi\nu}\left\{[1 - S_{(1)}] - N\lambda\left(\frac{2\pi}{\beta}\right)^{\Delta} 2\sin(\pi\Delta)\int_0^1 du\left[u^{-i\beta\omega/2\pi}\right.\right.$$
$$\left.\left.\cdot u^{-1/2}(1-u)^{\Delta}F(u) - \frac{\Gamma(1+2\Delta)}{\Gamma^2(1+\Delta)}u^{(\Delta-1)}(1-u)^{-(1+\Delta)}\right]\right\} \tag{80}$$

Note that, unlike the Fermi liquid case, the contribution to Σ^R of first order in the leading irrelevant operator has both real and imaginary parts and has non-trivial dependence on ω/T. Writing $u^{-i\beta\omega/2\pi} = \cos[\beta\omega(\ln u)/2\pi] - i\sin[\beta\omega(\ln u)/2\pi]$ we see that $\Sigma^R(\omega)^* = -\Sigma^R(-\omega)$ as required by time-reversal and particle-hole symmetry.

We now consider the $T \rightarrow 0$ limit of $\Sigma^R(\omega)$. The u-integral is now dominated by $u \approx 1$ due to the rapid oscillation of $u^{-i\beta\omega/2\pi}$. Writing $x \equiv 1 - u$, approximating the integrand by its value near $u = 1$, and extending the limits of integration to $x = \infty$, we obtain:

$$\Sigma^R(\omega) \rightarrow -\frac{in_i}{2\pi\nu}\left[[1 - S_{(1)}] - N\lambda\left(\frac{2\pi}{\beta}\right)^{\Delta} 2\sin(\pi\Delta)\frac{\Gamma(1+2\Delta)}{\Gamma^2(1+\Delta)}\right.$$

$$\cdot \int_0^\infty \frac{e^{i\omega\beta x/2\pi} - 1}{x^{(1+\Delta)}} \Bigg] \tag{81}$$

Rescaling x by $\omega\beta$ we see that the temperature-dependence of Σ cancells. Rotating the integration contour by 90^0, the integral can be expressed in terms of Euler's Gamma function, giving:

$$\Sigma^R(\omega, T=0) = -\frac{in_i}{2\pi\nu}\Bigg[[1 - S_{(1)}] + 2N\lambda \frac{\sin(\pi\Delta)\Gamma(1+2\Delta)\Gamma(1-\Delta)}{\Delta\Gamma^2(1+\Delta)}$$
$$\cdot [\cos(\pi\Delta/2) - i\epsilon(\omega)\sin(\pi\Delta/2)]\,|\omega|^\Delta\Bigg] \tag{82}$$

The zero-temperature frequency dependence is $\propto |\omega|^\Delta$ as anticipated from scaling; both real and imaginary parts are non-zero.

Finally, we calculate the resistivity to $O(T^\Delta)$. This can be expressed in terms of $\mathrm{Im}\Sigma^R(\omega)$ since we assume that the Kondo interaction only acts in the s-wave channel. The argument for this is reviewed in Appendix C. From the Kubo formula, we obtain the conductivity:

$$\sigma(T) = k \times 2\frac{e^2}{3m^2}\int \frac{d^3\vec{p}}{(2\pi)^3}\left[-\frac{dn}{d\epsilon_p}\right]\vec{p}^2\tau(\epsilon_p) \tag{83}$$

Here e and m are the charge and mass of the electron, n is the Fermi distribution function, ϵ_k is the electron dispersion relation and $\tau(\epsilon_k)$ is the life-time, $\tau = \left(\mathrm{Im}\Sigma^R\right)^{-1}$. An extra factor of k has been inserted since any of the k channels of electrons can conduct the charge. To first order in λ, the life-time is given by:

$$\tau(\omega) = \frac{\pi\nu}{n_i[1 - S_{(1)}]}\Bigg\{1 + \frac{N\lambda}{[1 - S_{(1)}]}\left(\frac{2\pi}{\beta}\right)^\Delta 2\sin(\pi\Delta)\int_0^1 du\Bigg[\cos[(\beta\omega/2\pi)\ln u]$$
$$\cdot u^{-1/2}(1-u)^\Delta F(u) - \frac{\Gamma(1+2\Delta)}{\Gamma^2(1+\Delta)}u^{(\Delta-1)}(1-u)^{-(1+\Delta)}\Bigg]\Bigg\} \tag{84}$$

In the low-temperature limit, after changing variables to $x \equiv \epsilon_p/T$, Equation (83) for the conductivity becomes,

$$\sigma(T) = \frac{2k\pi(e\nu v_F)^2}{3n_i[1-S_{(1)}]}\left\{1 + \frac{2N\sin(\pi\Delta)\lambda}{[1-S_{(1)}]}\left(\frac{2\pi}{\beta}\right)^{\Delta}\int_{-\infty}^{\infty}\frac{dx}{4cosh^2(x/2)}\int_0^1 du\left[\cos[(x/2\pi)\ln u]\right.\right.$$
$$\left.\left.\cdot u^{-1/2}(1-u)^{\Delta}F(u) - \frac{\Gamma(1+2\Delta)}{\Gamma^2(1+\Delta)}u^{(\Delta-1)}(1-u)^{-(1+\Delta)}\right]\right\} \tag{85}$$

Here we have reinstated the Fermi velocity which was previously set to one. The integral over x can be done first exactly, [Ref. (13) Eq. (3.982/1)] giving the resistivity:

$$\rho(T) = \frac{3n_i[1-S_{(1)}]}{2k\pi(e\nu v_F)^2}\left\{1 - \frac{2N\sin(\pi\Delta)\lambda}{[1-S_{(1)}]}\left(\frac{2\pi}{\beta}\right)^{\Delta}\int_0^1 du\left[\right.\right.$$
$$\left.\left.\cdot|\ln u|(1-u)^{\Delta-1}F(u) - \frac{\Gamma(1+2\Delta)}{\Gamma^2(1+\Delta)}u^{(\Delta-1)}(1-u)^{-(1+\Delta)}\right]\right\} \tag{86}$$

Note that the leading temperature dependent term in the resistivity is proportional to T^{Δ} as anticipated. This final integral can be easily evaluated numerically, by using the Taylor expansion of the hypergeometric function at $u = 0$, which has unit radius of convergence, and the asymptotic expansion at $u = 1$. Thus we have succeeded in expressing the resistivity (and self-energy) in terms of one unknown parameter, λ. The same parameter also determines the impurity specific heat and susceptibility so that two independent universal ratios can be formed. For $k > 2$ these are given by:

$$\frac{C(T)}{V} = \frac{2\pi^2 k}{3}T\left[\nu + n_i\lambda^2 T^{2\Delta-1}\frac{9\pi^{2\Delta+1/2}\Delta^2(k/2+2)\Gamma(1/2-\Delta)}{2k\Gamma(1-\Delta)}\right] \tag{87}$$

and

$$\frac{\chi(T)}{V} = \frac{k(g\mu_B)^2}{2}\left[\nu + n_i\lambda^2 T^{2\Delta-1}\frac{\pi^{2\Delta+1/2}(k/2+2)^2\Gamma(1/2-\Delta)}{k\Gamma(1-\Delta)}\right] \tag{88}$$

where μ_B is the Bohr magneton and g is the gyromagnetic ratio.

We now specialize to the case $k = 2$, $s = 1/2$ of current experimental interest. The zero-temperature self-energy becomes:

$$\Sigma^R(\omega, T=0) = -\frac{in_i}{2\pi\nu}\left[1 + 24\lambda/\sqrt{2\pi}[1 - i\epsilon(\omega)]|\omega|^{1/2}\right] \tag{89}$$

The real and imaginary parts of Σ^R have equal magnitude. The resistivity becomes:

$$\rho(T) = \frac{3n_i}{4\pi(e\nu v_F)^2}\left[1 - 3\lambda\sqrt{\pi T}I\right] \tag{90}$$

where:

$$I \equiv \int_0^1 du\left[|\ln u|(1-u)^{-1/2}F(3/2,3/2;1;u) - \frac{4}{\pi u^{1/2}(1-u)^{3/2}}\right] \tag{91}$$

We find that the integrand is negative definite and the integral has the value $I \approx -1.333 \approx -4/3$. [We suspect that the integral is exactly $-4/3$ but have not been able to prove it.] This gives:

$$\rho(T) = \frac{3n_i}{4\pi(e\nu v_F)^2}[1 + 4\sqrt{\pi T}\lambda] \tag{92}$$

(with a possible error of $\pm.1\%$ in the second term.) In this case the specific heat and susceptibility are given by:

$$\frac{C(T)}{V} = \frac{4\pi^2}{3}T\left[\nu + n_i\lambda^2\ln(T_K/T)\frac{27\pi}{4}\right] \tag{93}$$

and

$$\frac{\chi(T)}{V} = \frac{k(g\mu_B)^2}{2}\left[\nu + n_i\lambda^2 \ln(T_K/T) 18\pi\right] \tag{94}$$

Here the Kondo temperature T_K is given by $\lambda \approx T_K^{-\Delta}$.

Note that the sign of the leading temperature-dependent term in $\rho(T)$ depends on the sign of λ. In general λ can take either sign; it reverses as the Kondo coupling passes through its critical point, $\lambda_{K,c}$. An assumption of monotonicity of the resistivity implies that λ is negative for $\lambda_K < \lambda_{K,c}$ and hence positive for $\lambda_K > \lambda_{K,c}$. Thus the resistivity is a decreasing function of T at low T, for weak Kondo coupling but an increasing function for strong Kondo coupling. (For very strong Kondo coupling the resistivity should rise rapidly from its zero-temperature value to the unitary limit.) This could be checked using numerical methods. It might also be possible to determine this sign from existing numerical data on the magnetoresistance.[7] Note that the situation is different for the Fermi liquid Kondo fixed points (see Appendix D) where the temperature-dependent part of $\rho(T)$ is second order in λ and is always a decreasing function.

IV. PARTICLE-HOLE SYMMETRY BREAKING

Finally we consider the situation with particle-hole symmetry breaking. The important effect is a potential scattering term, in addition to the Kondo interaction. In the continuum limit, at low energies, this simply corresponds to an additional interaction of the form:

$$\delta H_P = \frac{\delta_P v}{\pi} J_L(0) \tag{95}$$

in the one-dimensional left-moving theory, where $J(0)$ is the charge current. The subscript P stands for potential scattering. The essential point is that potential scattering acts only in the *charge* sector and does not effect the Kondo physics which takes place only in the *spin* sector. Furthermore this term leaves the charge sector non-interacting since its bosonized form is $\propto \partial\phi/\partial x(0)$. Thus it corresponds to an exactly marginal boundary operator. In fact its effect on the charge spectrum is the same as a chemical potential term:

$$\delta H_P = \frac{\delta_P v_F}{l} Q \tag{96}$$

where Q is the conserved charge. ie., at low energies we may approximate the energy-dependent phase shift by a constant, its value at the Fermi surface, δ_P. Such a constant phase shift is equivalent to a chemical potential of $O(1/l)$. It changes the finite-size spectrum to:[3]

$$E = \frac{v_F \pi}{l}\left[\frac{1}{4k}\left(Q + 2k\frac{\delta_P}{\pi}\right)^2 + \frac{j(j+1)}{2+k} + \frac{c_f}{2+k} + n^Q + n^s + n^f\right] \tag{97}$$

It produces a line of stable fixed points corresponding to the fixed point occuring in the particle-hole symmetric case, modified by the addition of a chemical potential.

Its effect on the single-particle Green's functions is simply to multiply G_{RL} by a factor of $e^{2i\delta_P}$ and G_{LR} by a factor of $e^{-2i\delta_P}$ coming from the charge factor in the Green's functions (and similarly for multi-point Green's functions). The zero-temperature, zero-frequency self-energy becomes:

$$\Sigma_R = -\frac{in_i\left[1 - e^{2i\delta_P} S_{(1)}\right]}{2\pi\nu} \tag{98}$$

Thus the factor of $1 - S_{(1)}$ in the scattering rate and zero-temperature resistivity is

replaced by $[1-\cos(2\delta_P)S_{(1)}]$. (Recall that $S_{(1)}$ is real.) The leading irrelevant operator, living entirely in the spin sector, is unaffected by the potential scattering term, for weak Kondo coupling. Thus the frequency and temperature dependent terms in the self-energy coming from perturbation theory in the leading irrelevant operator are also simply multiplied by the factor $e^{2i\delta_P}$. Thus the self-energy becomes:

$$\Sigma^R(\omega) = -\frac{in_i}{2\pi\nu}\left\{[1-e^{2i\delta_P}S_{(1)}] - e^{2i\delta_P}N\lambda\left(\frac{2\pi}{\beta}\right)^{\Delta} 2\sin(\pi\Delta)\int_0^1 du\left[u^{-i\beta\omega/2\pi}\right.\right.$$
$$\left.\left.\cdot u^{-1/2}(1-u)^{\Delta}f(u) - \frac{\Gamma(1+2\Delta)}{\Gamma^2(1+\Delta)}u^{(\Delta-1)}(1-u)^{-(1+\Delta)}\right]\right\} \tag{99}$$

Note that, in the calculation of the leading temperature-dependence of the resistivity, only the part of the self-energy which is both imaginary and an even function of ω contributes. Thus we obtain:

$$\rho(T) = \frac{3n_i[1-\cos(2\delta_P)S_{(1)}]}{2k\pi(e\nu v_F)^2}\left\{1 - \frac{\cos(2\delta_P)2N\sin(\pi\Delta)\lambda}{[1-\cos(2\delta_P)S_{(1)}]}\left(\frac{2\pi}{\beta}\right)^{\Delta}\int_0^1 du\left[\right.\right.$$
$$\left.\left.\cdot|\ln u|(1-u)^{\Delta-1}F(u) - \frac{\Gamma(1+2\Delta)}{\Gamma^2(1+\Delta)}u^{(\Delta-1)}(1-u)^{-(1+\Delta)}\right]\right\} \tag{100}$$

In conclusion, two unknown parameters, δ_P and λ now enter into our formula for the resistivity and the universality of the $T=0$ resistivity is spoiled. However by taking an appropriate ratio involving the zero temperature resisivity and the temperature-dependent part we may eliminate δ_P, for $k>2$. Neither the specific heat nor the susceptibility are affected, at low temperatures, by potential scattering. Thus it is still possible to form two universal ratios from the specific heat, susceptibility and resistivity, for $k>2$. For $k=2$, $S_{(1)}=0$ so that the zero-temperature resistivity is independent of δ_P; ie. universal even in the presence

of particle-hole symmetry breaking. δ_P cannot be eliminated between the zero-temperature resistivity and finite-temperature part; however it could be eliminated using the thermopower.

APPENDIX A: T=0 RESISTIVITY IN LARGE-K LIMIT

In this appendix we check our calculation of the T=0 resistivity, ie. the one-particle S-matrix, $S_{(1)}$, by comparing it with a perturbative calcultion in the large-k limit. In this limit the non-trivial fixed point occurs at a Kondo coupling, λ_K of $O(1/k)$ so that a perturbative calculation becomes reliable.

We perform the perturbative calculation using the same method as in Reference (3) Appendix B. The second-order correction to the single-particle Green's function is:

$$\delta G^{\beta j}_{LR\alpha i}(z,\bar{z}') = -\frac{\lambda_K^2}{2!}\int_{-\infty}^{\infty} d\tau_1 d\tau_2 < \psi_{\alpha i}(z)\vec{J}(\tau_1)\cdot\vec{S}(\tau_1)\vec{J}(\tau_2)\cdot\vec{S}(\tau_2)\psi^{\dagger\beta j}(\bar{z}') > \tag{A101}$$

Using $< S^a S^b >= (1/3)s(s+1)\delta^{ab}$, and making the two possible contractions of the fermion fields, we obtain:

$$\delta G^{\beta j}_{LR\alpha i} = -\frac{\lambda_K^2}{2!}s(s+1)\frac{1}{4}\delta_i^j\delta_\alpha^\beta\int d\tau_1 d\tau_2\left[\frac{1}{(z-\tau_1)(\tau_1-\tau_2)(\tau_2-\bar{z}')} + (\tau_1 \leftrightarrow \tau_2)\right] \tag{A102}$$

Combining the two terms we obtain a product of elementary integrals:

$$\delta G^{\beta j}_{LR\alpha i} = -\frac{\lambda_K^2}{8}s(s+1)\delta_i^j\delta_\alpha^\beta(z_1-\bar{z}_2)\int\frac{d\tau_1}{(z-\tau_1)(\tau_1-\bar{z}')}\int\frac{d\tau_2}{(z-\tau_2)(\tau_2-\bar{z}')} \tag{A103}$$

Performing these two (identical) integrals by contour methods, we obtain:

$$\delta G^{\beta j}_{LR\alpha i} = \frac{\lambda_K^2}{8} s(s+1)\delta_i^j \delta_\alpha^\beta \frac{(2\pi)^2}{(z-\bar{z}')} \tag{A104}$$

We see that this is proportional to the free Green's function:

$$G^{\beta j}_{LR\alpha i}(z,\bar{z}') = G^{0\beta j}_{LR\alpha i}(z,\bar{z}') \left[1 - \frac{\lambda_K^2 s(s+1)(2\pi)^2}{8}\right] \tag{A105}$$

Inserting the large-k value of the Kondo coupling at the non-trivial fixed point, $\lambda_K^c \approx 2/k$, we obtain the one-particle S-matrix:

$$S_{(1)} \approx \left[1 - \frac{s(s+1)(2\pi)^2}{2k^2}\right] \tag{A106}$$

The exact formula for $S_{(1)}$, calculated in Section II, is:

$$S_{(1)} = \frac{\cos[\pi(2s+1)/(2+k)]}{cos[\pi/(2+k)]} \tag{A107}$$

Taylor expanding to second order in 1/k we obtain the same result as Equation (A106). This provides a useful check on the conformal field theory result.

APPENDIX B: HYPERGEOMETRIC FUNCTION

The integral of Equation (67):

$$F(1+\Delta, 1+\Delta, 1; w) = \frac{1}{2\pi}\int_0^{2\pi} \frac{d\theta}{[w+1-2w^{1/2}cos\theta]^{1+\Delta}}, \tag{B108}$$

defines a hypergeometric function[11] which is analytic for $|w| < 1$. We wish to consider its analytic continuation to $|w| > 1$. To do this it is convenient to regard the θ integration as a contour integral over another complex variable, $v \equiv e^{i\theta}$:

$$F(w) = \frac{1}{2\pi} \oint \frac{dv}{iv} \left[\frac{-v}{w^{1/2}(v - w^{1/2})(v - w^{-1/2})} \right]^{1+\Delta} \tag{B109}$$

The contour is the unit circle. As a function of v, the integrand has three branch points at $v = 0$, $w^{1/2}$ and $w^{-1/2}$. Since $F(w)$ as originally defined by Equation (B108) is analytic for $|w| < 1$ we see that there must be a branch cut joining up the first two branch points and that the branch cut from the third branch point must extend to ∞ as shown in Figure (2). It is now clear that, for $|w| < 1$ we may deform the v integration contour so that it approaches the first branch cut from $v = 0$ to $v = w^{1/2}$, as shown in Figure (3). Since the integrand diverges at the second branch point we must include a contribution from a circular section of the contour around this branch point. This gives:

$$F(w) = \frac{-\sin(\pi\Delta)}{\pi} \int_o^{w^{1/2}-\epsilon} \frac{dv}{v} \left[\frac{v}{w^{1/2}(w^{1/2} - v)(w^{-1/2} - v)} \right]^{1+\Delta} + \ldots \tag{B110}$$

where ... represents the contribution from the circular section. This simply subtracts off the $\epsilon^{-\Delta}$ divergence of the integral:

$$F(w) = \frac{-\sin(\pi\Delta)}{\pi} lim_{\epsilon\to 0} \left\{ \int_o^{w^{1/2}-\epsilon} \frac{dv}{v} \left[\frac{v}{w^{1/2}(w^{1/2} - v)(w^{-1/2} - v)} \right]^{1+\Delta} - \frac{1}{\Delta\epsilon^{\Delta} w^{1/2}(w^{-1/2} - w^{1/2})^{1+\Delta}} \right\} \tag{111}$$

It is convenient to subtract a quantity from the integrand to cancel the divergence so that the limit $\epsilon \to 0$ may be taken. This gives:

$$F(w) = \frac{-\sin(\pi\Delta)}{\pi} \left\{ \int_o^{w^{1/2}} \frac{dv}{(w^{1/2} - v)^{1+\Delta}} \left[\frac{v^{\Delta}}{[w^{1/2}(w^{-1/2} - v)]^{1+\Delta}} - \frac{1}{w^{1/2}(w^{-1/2} - w^{1/2})^{1+\Delta}} \right] - \frac{1}{\Delta(1-w)^{1+\Delta}} \right\} \qquad 0 < w < 1 \tag{112}$$

This subtracted integral representation will be useful below.

Clearly there is a unique analytic continuation of $F(w)$ for $|w| > 1$ provided that $\mathrm{Im} w \neq 0$, as shown in Figure (4a, 4b). Now consider what happens as we let $\mathrm{Im}\ w \to 0$. The third branch point squeezes the integration contour surrounding the first branch cut. This third branch point approaches the integration contour from below or above if $\mathrm{Im}\ w$ is positive or negative respectively. Thus $F(w)$ is discontinuous along the real axis for $w > 1$; ie. it has a branch cut. We would like to consider both the principal part, and the discontinuity of F(w) at its branch cut. To do this, it is convenient to choose the second branch cut in the complex v plane to lie parallel to the imaginary axis, as shown in Figure (4a,4b). Depending on whether w approaches the real axis from above or below, the second branch cut in the v plane approaches the real axis from below or above, respectively. The phase of the integrand on the two sides of the first branch cut is indicated in Figure (5) for either sign of the phase of w. We see that:

$$lim_{\epsilon \to 0+} F(w \pm i\epsilon) = c(w) + e^{\pm i\pi\Delta} d(w) \tag{B113}$$

where the first term comes from the portion of the integral between 0 and $w^{-1/2}$ and the second term comes from the portion between $w^{-1/2}$ and $w^{1/2}$. There are also contributions from the integral on the semi-circular contours around the branch points. This simply subtracts the $O(\epsilon^{-\Delta})$ divergence from the integrals along the real axis, as occured above. Thus we obtain:

$$F(w \pm i\delta) = \frac{-\sin(\pi\Delta)}{\pi} \left\{ \int_0^{w^{-1/2}-\epsilon} \frac{dv}{v} \left[\frac{v}{w^{1/2}(w^{1/2} - v)(w^{-1/2} - v)} \right]^{1+\Delta} \right.$$
$$\left. + e^{\pm i\pi\Delta} \int_{w^{-1/2}+\epsilon}^{w^{1/2}-\epsilon'} \frac{dv}{v} \left[\frac{v}{w^{1/2}(w^{1/2} - v)(v - w^{-1/2})} \right]^{1+\Delta} + \ldots \right\} \tag{114}$$

where the ... represents the contribution from the semi-circular integration around the second and third branch points. We are only interested in c(w) ie. the first term above. Representing the subtraction by an addition to the integrand plus a finite correction, as before, we obtain for this:

$$c(w) = \frac{-\sin(\pi\Delta)}{\pi}\left\{\int_0^{w^{-1/2}} \frac{dv}{(w^{-1/2}-v)^{1+\Delta}}\left[\frac{v^{\Delta}}{[w^{1/2}(w^{1/2}-v)]^{1+\Delta}} - \frac{1}{w^{1/2+\Delta}[w^{1/2}-w^{-1/2}]^{1+\Delta}}\right] - \frac{1}{\Delta(w-1)^{1+\Delta}}\right\} \tag{115}$$

Comparing the subtracted integral representation for $F(w)$ for $0 < w < 1$, Equation (112), with the representation for $c(w)$ in the region $w > 1$, Equation (115), we see that:

$$c(w) = w^{-(1+\Delta)}F(w^{-1}) \qquad (w > 1) \tag{B116}$$

In conclusion, the hypergeometric function, $F(1+\Delta, 1+\Delta; 1; w)$ has a branch cut along the real axis, for $w > 1$. On the two sides of the cut it takes the values:

$$F(w) = c(w) + e^{\pm i\pi\Delta}d(w) \tag{B117}$$

c(w) can be expressed in terms of F in its analytic region by Equation (B116). This expression is useful because we can use the convergent power series, for instance, to calculate F in the analytic region.

APPENDIX C: RESISTIVITY

In this appendix we review the argument that the resistivity in the dilute impurity limit is determined by the single particle scattering rate, in the case where the Kondo interaction occurs only in the s-wave channel. We shall see that this argument still holds at the non-trivial fixed point in the overscreened case. We follow closely the reasoning in Appendix D of Reference (19).

The conductivity is determined, from the Kubo formula, from the time-ordered, imaginary time, finite temperature current-current correlation function:

$$\Pi(i\omega_n) \equiv -\left(\frac{e^2}{3m^2}\right)\int\frac{d^3\vec{p}}{(2\pi)^3}\int\frac{d^3\vec{p}\,'}{(2\pi)^3}(\vec{p}\cdot\vec{p}\,')\int_0^\beta d\tau e^{i\omega_n\tau}\mathcal{T} < \psi^\dagger(\vec{p},\tau)\psi(\vec{p},\tau)\psi^\dagger(\vec{p}\,',0)\psi(\vec{p}\,',0) > \tag{C118}$$

(A sum over spin and flavor indices is implied. The <> denotes averaging over positions of the random impurities as well as a Boltzmann average.) Let us consider this Green's function for a single Kondo impurity at the origin. It is convenient to expand the electron annihilation operator in spherical harmonics. The crucial point is that the Kondo interaction is assumed to act only on the s-wave component. This means that all components of different angular momentum are decoupled and that the correlation function for any angular momentum channel, $l \geq 1$ takes on the non-interacting value. We may decompose the Fourier transformed electron operator into harmonics:

$$\psi(\vec{p},\tau) = \sum_{l,m}\psi_{l,m}(\vec{p},\tau) \tag{C119}$$

The only non-zero two-point functions are:

$$G^{(2)}_{l,m} \equiv \mathcal{T} < \psi^\dagger_{l,m}\psi_{l,m} > \tag{C120}$$

Of these, only $G_s^{(2)}$ (the $l = 0$ s-wave part) is different from its non-interacting value. The only four-point function which does simply factorize into a product of two two-point functions is:

$$G_s^{(4)} \equiv \mathcal{T} < \psi_s^\dagger \psi_s \psi_s^\dagger \psi_s > \tag{C121}$$

Factorized contributions to $\Pi(\omega_n)$ must be of the form:

$$\mathcal{T} < \psi_{l,m}^\dagger(\vec{p},\tau)\psi_{l,m}(\vec{p}\,',0) > \mathcal{T} < \psi_{l',m'}^\dagger(\vec{p}\,',0)\psi_{l',m'}(\vec{p},\tau) > \tag{C122}$$

(with at least one of l or l' different than zero). Factorized contributions of the form:

$$\mathcal{T} < \psi_{l,m}^\dagger(\vec{p},\tau)\psi_{l,m}(\vec{p},\tau) > \mathcal{T} < \psi_{l',m'}^\dagger(\vec{p}\,',\tau)\psi_{l',m'}(\vec{p}\,',\tau) > \tag{C123}$$

vanish upon multiplying by $\vec{p}\cdot\vec{p}\,'$ and integrating over $\vec{p}$ and $\vec{p}\,'$ since the two point functions are even functions of $\vec{p}$ and $\vec{p}\,'$. Thus we may write the exact four-point Green's function in the presence of an impurity at the origin schematically as:

$$G^{(4)} = G_s^{(4)} + G_s^{(2)} \sum_{l=1}^{\infty}\sum_m G_{l,m}^{(2)} + \sum_{l=1}^{\infty}\sum_m G_{l,m}^{(2)} G_s^{(2)} + \sum_{l=1}^{\infty}\sum_m G_{l,m}^{(2)} \sum_{l'=1}^{\infty}\sum_{m'} G_{l',m'}^{(2)} \tag{C124}$$

The full 2-point Green's function is:

$$G^{(2)} = \sum_{l=0}^{\infty}\sum_m G_{l,m}^{(2)} \tag{C125}$$

In terms of this we may write the exact four-point function as:

$$G^{(4)} = G_s^{(4)} + G^{(2)}G^{(2)} - G_s^{(2)}G_s^{(2)} \tag{C126}$$

Thus we have expressed the exact four-point function as a sum of a disconnected part, $G^{(2)}G^{(2)}$ written in terms of the exact two-point function together with a correction which should be interpreted as the connected part, $G_s^{(4)} - G_s^{(2)}G_s^{(2)}$. We now wish to argue that the connected part does not contribute to the resistivity. The reason is simply that it only involves s-wave correlation functions which only depend on the absolute values of the momenta, $|\vec{p}|$, $|\vec{p}\,'|$ not on their directions. Therefore we obtain zero after multiplying by $\vec{p}\cdot\vec{p}\,'$ and integrating over the directions of $\vec{p}$ and $\vec{p}\,'$. Therefore only the disconnected part contributes to Π. This makes a non-zero contribution because there is a factor of $\delta^3(\vec{p}-\vec{p}')$ and thus the factor $\vec{p}\cdot\vec{p}\,'$ becomes p^2.

The argument so far has only considered the contribution of a single impurity. However, in the dilute limit the two-point function can be calculated by iterating the single-impurity T-matrix to obtain:

$$< G^{(2)} >= \frac{1}{\left[G_0^{(2)}\right]^{-1} - \Sigma} \tag{C127}$$

($G_0^{(2)}$ represents the non-interacting Green's function. The <> denotes averaging over impurity positions.) Likewise the four-point function is found by summing up ladder diagrams involving independent insertions of the single impurity connected vertex and the interacting two-point function. All such connected diagrams make vanishing contribution to Π for the same reason as given above. [For more details see Reference (19).]

APPENDIX D: RESISTIVITY IN FERMI LIQUID CASE

In this appendix we will calculate the self-energy and resistivity to second order in the leading irrelevant operator at the Fermi liquid fixed point which occurs in the exactly screened Kondo problem, where $k = 2s$. This calculation was originally performed by Nozières,[12] using a slightly different approach based on the Boltzmann equation and an effective phase shift which depends on energy and particle density. The approach that we use, which we directly generalize to the non-Fermi liquid case, is instead based on the single particle Green's function or self-energy and the Kubo formula. We repeat Nozières calculation as a check on our method. The calculation is first performed for the case of a single channel and an $s = 1/2$ impurity; we generalize it to the general exactly screened multi-channel case with $k = 2s$ and the end of this appendix.

At the Fermi liquid fixed point the leading irrelevant operator is quadratic in the spin current.[1] The interaction term in the Hamiltonian is:

$$H_{int} = -\lambda \vec{J}(0) \cdot \vec{J}(0) \tag{D128}$$

Here we work in the left-moving formalism and suppress L subscripts. At the zero-temperature stable fixed point the phase shift is $\pi/2$. Therefore the right-moving fermion field is obtained from the left-moving one by:

$$\psi_R(r) = -\psi_L(-r) \tag{D129}$$

The minus sign in this equation signifies the $\pi/2$ phase shift. We first calculate the single-particle Green's function in the purely left-moving theory and then use this boundary condition to determine all four Green's functions involving any combi-

nation of L and R fields. To zeroth order in λ the modified boundary condition implies,

$$G_{LR}(\omega_n, r_1, r_2) = -G^0_{LR}(\omega_n, r_1, r_2) = -G^0_L(\omega_n, r_1 + r_2) \tag{D130}$$

where G^0_L is given by Eq. (38). Setting the one-particle S-matrix, $S_{(1)} = -1$, signifying the $\pi/2$ phase shift, we obtain, from Equation (44), the T-matrix:

$$T(\omega_n) = -\frac{2i}{2\pi\nu}\epsilon(\omega_n) \tag{D131}$$

To proceed to higher orders in λ we will first calculate the T-matrix in the one-dimensional theory and then convert this into the three-dimensional T-matrix using the formulas of Section III. The one-dimensional calculation is performed using standard fermionic Feynman diagram techniques. It is convenient to separate the interaction into a normal-ordered part and a quadratic correction. Using standard point-splitting techniques to define the singular operator, we obtain:

$$\begin{aligned} H_{int} &= -\lambda\psi^{\alpha\dagger}\frac{\vec{\sigma}^{\beta}_{\alpha}}{2}\psi_\beta \cdot \psi^{\gamma\dagger}\frac{\vec{\sigma}^{\delta}_{\gamma}}{2}\psi_\delta \\ &= \frac{3\lambda}{4} : \psi^{\alpha\dagger}\psi_\alpha\psi^{\beta\dagger}\psi_\beta : -\frac{3i\lambda}{4} : \left[\psi^{\alpha\dagger}\frac{d}{dx}\psi_\alpha - \frac{d}{dx}\psi^{\alpha\dagger}\psi_\alpha\right] : +\text{constant} \end{aligned} \tag{132}$$

We represent these two terms by four-legged and two-legged vertices, as shown in Figure (6). We represent the corrections to the one-dimensional Green's function in terms of a one-dimensional T-matrix, $\Sigma_1(\omega_n)$:

$$G(\omega_n, r_1, r_2) - G^0(\omega_n, r_1, r_2) = G^0_L(\omega_n, r_1)T_1(\omega_n)G^0_L(\omega_n, -r_2) \tag{D133}$$

Because of the step functions in $G^0_L(\omega_n, r)$, [Equation (38)] this correction vanishes

unless r_1 and r_2 have opposite sign. ie. only the LR and RL Green's functions receive any corrections due to the interactions. As explained in Section III this feature is neccessary in order that the corrections to the three-dimensional Green's function have the form of a T-matrix insertion. The correction to the three-dimensional Green's function of Equation (41) then has the form of a T-matrix insertion with:

$$T(\omega_n) = \frac{T_1}{\nu}(\omega_n) \tag{D134}$$

To first order in λ only the two-legged vertex contributes. It simply differentiates the Green's function for the external line, giving a T-matrix:

$$T_1 = \frac{3i\lambda}{2}\omega_n \tag{D135}$$

Hence the three-dimensional T-matrix up to $O(\lambda)$ is given by:

$$T(\omega_n) = -\frac{1}{2\pi\nu}[2i\epsilon(\omega_n) - 3\pi i\lambda\omega_n] \tag{D136}$$

Multiplying by the impurity density and continuing to real frequency we obtain the retarded self-energy:

$$\Sigma^R(\omega) = -\frac{n_i}{2\pi\nu}[2i - 3\pi\lambda\omega] \tag{D137}$$

The first order contribution to Σ^R is real, and so does not contribute to the life-time or conductivity. In fact it can be interpreted as a phase-shift:

$$\Sigma^R(\omega) \approx -\frac{in_i}{2\pi\nu}[1 - e^{2i\delta(\omega)}] \tag{D138}$$

with:

$$\delta(\omega) = \frac{\pi}{2} + \frac{3\pi\lambda}{2}\omega \tag{D139}$$

where the exponential is expanded to first order in λ.

Note that the two-legged vertex does not introduce any many-body effects and therefore must correspond exactly to a phase shift. We should expect that the Feynman diagrams involving only multiple insertions of the two-legged vertex will sum up to a self-energy of the form of Equation (D138) with the phase shift given by Equation (D139) up to corrections of higher order in λ. The four-legged vertex however introduces genuine many-body effects. It contributes an inelastic part to the self-energy. By demanding that the leading irrelevant operator only involve spin operators (not charge) we have determined the ratio of elastic to inelastic terms. We remind the reader that this condition followed from our bosonization procedure and the fact that the Kondo interaction only involved the spin bosons. If we also allowed a charge operator, there would be one other leading irrelevant operator of the same dimension (2) permitted by symmetry, namely the square of the *charge* current: $\lambda_c J(0)^2$. Actually, λ_c will only be strictly zero if we adopt a regularization which preserves spin-charge separation. Beginning with a more physical regularization like a band cut-off, D, or a lattice spacing, some irrelevant operators will be present near the zero Kondo coupling fixed point which mix spin and charge, leading to a non-zero λ_c. However, for a small Kondo coupling we expect $|\lambda_c| << |\lambda|$. λ will be of order $1/T_K$, where T_K is a low energy scale generated by the infra-red divergences of perturbation theory: $T_K \propto De^{\frac{-1}{\lambda}}$. Since the interactions which introduce this energy scale are entirely in the spin sector we expect them to produce only the

spin term, λ. λ_c should be only of $O(1/D)$. The same conclusion was reached by Nozières by demanding that, at weak coupling, the singularity should be tied to the Fermi level.

We now turn to the diagrams of $O(\lambda^2)$ shown in Figure 7. The first of these corresponds simply to a double insertion of the two-legged vertex. When the derivative acts on the external propogator it simply produces a factor of ω_n. The derivative on the internal propogator is most easily handled in a Fourier transformed representation where it gives a factor of ip. Thus we obtain the second-order elastic contribution to the one-dimensional T-matrix:

$$T_{1,el} = -\left(\frac{3\lambda i}{4}\right)^2 \int_{-D}^{D} dp \frac{(\omega_n + ip)^2}{(i\omega_n + p)} \tag{D140}$$

Here we have introduced an effective band cut-off, D, which obeys $|\omega_n| << D << T_K$). ie. our starting Hamiltonian, Eq. (D128) becomes valid when we have lowered the cut-off to this order of magnitude. Performing the integral explicitly, in this limit, we obtain:

$$T_{1,el} = \left(\frac{3\lambda}{4}\right)^2 [6i\omega_n D - 4\pi i\omega_n^2 \epsilon(\omega_n)] \tag{D141}$$

The corresponding three-dimensional retarded self-energy including all elastic terms up to $O(\lambda^2)$ is:

$$\Sigma^R_{1,el} = -\frac{in_i}{2\pi\nu}\left[2 + 3\pi i\lambda\omega - \frac{(3\pi\lambda\omega)^2}{2} - \frac{27\pi}{4} i\lambda^2\omega D\right] \tag{D142}$$

The third term is the one we are after. It is a correction to $\mathrm{Im}\Sigma^R$ of $O(\lambda^2)$. As anticipated it corresponds to the second-order term in the expansion of the energy-dependent part of the phase shift in Equations (D138) and (D139). The fourth

term, which is real, corresponds to a correction to the phase shift itself, in other words, a renormalization of the leading irrelevant coupling constant. Note that it is suppressed by a factor of $\lambda D \approx D/T_K << 1$ compared to the leading term.

We continue our program of calculating the self-energy to $O(\lambda^2)$. The second diagram of Figure 7 has no frequency dependence and in fact vanishes. The third, inelastic diagram of Figure (7) gives a contribution to the one-dimensional T-matrix:

$$T_{1,in} = -\left[\frac{3\lambda}{2}\right]^2 \int_0^\beta e^{i\omega_n \tau} G_L^0(\tau, x=0)^3 \tag{D143}$$

The propagator can be written as:

$$G_L^0(\tau + ix) = -\int_{-D}^{D} dp e^{p(\tau+ix)} n(p) \tag{D144}$$

where $n(p)$ is the Fermi distribution function. This obeys the important property, $G(\beta - \tau) = G(\tau)$. This allows us to rewrite this contribution to the T-matrix as:

$$T_{1,in} = -i\left[\frac{3\lambda}{2}\right]^2 \int_0^\beta sin(\omega_n \tau) G_L^0(\tau)^3 \tag{D145}$$

The propagator can be evaluated explicitly, for $D >> 1/\beta$:

$$G_L^0(\tau) = -\frac{1}{\frac{\beta}{\pi} sin \frac{\pi}{\beta}\tau} + \frac{e^{-D\tau}}{\tau} + \frac{e^{-D(\beta-\tau)}}{\beta - \tau} \tag{D146}$$

Note that the two D-dependent terms are negligible except near $\tau = 0$ and $\tau = \beta$ respectively, where they cut off the divergence of the first term. Let us first consider the D-dependence of the T-matrix for $D >> |\omega_n|$. As $D \to \infty$, there is a term linear in D which comes from the regions of integration $\tau << 1/|\omega_n|$ and $\beta - \tau << 1/|\omega_n|$. In this region we may approximate the integrand to lowest order in $\omega_n \tau$. Thus the D-dependent term is:

$$T_{1,in} = i\left[\frac{3\lambda}{2}\right]^2 2\omega_n \int_0^\infty \frac{d\tau}{\tau^2}\left[1-e^{-D\tau}\right]^3 + \text{D-independent terms} \tag{D147}$$

Evaluating this integral gives:

$$T_{1,in} = i\left[\frac{3\lambda}{2}\right]^2 2\omega_n D3ln(4/3) + \text{D-independent terms} \tag{D148}$$

The remaining D-independent part can be evaluated using a more convenient regulator:

$$T_{1,in} = i\left[\frac{3\lambda}{2}\right]^2 \left[6ln(4/3)\omega_n D + lim_{\epsilon\to 0+}\int_0^\beta \frac{\sin(i\omega_n\tau)}{[\frac{\beta}{\pi}sin\frac{\pi}{\beta}(\tau+i\epsilon)]^3}\right] \tag{D149}$$

This latter regulator corresponds to a splitting of the two vertices in the Feynman diagram by a spatial distance ϵ. This integral is finite for all ϵ and can be simply evaluated by Taylor expanding:

$$[sin\frac{\pi}{\beta}(\tau+i\epsilon)]^{-3} = -(2i)^3\sum_{n=0}^{\infty}\frac{n(n+1)}{2}exp\left[i\frac{\pi}{\beta}(2n+1)(\tau+i\epsilon)\right] \tag{D150}$$

This gives:

$$T_{1,in} = i\left[\frac{3\lambda}{2}\right]^2 \left[6ln(4/3)\omega_n D - \epsilon(\omega_n)\frac{\pi}{2}(\omega_n^2 - \pi^2/\beta^2)\right] \tag{D151}$$

and

$$\Sigma_{in}^R = \frac{n_i}{\nu}\left[\frac{3\lambda}{2}\right]^2 \left[6ln(4/3)\omega D + i\frac{\pi}{2}(\omega^2+\pi^2T^2)\right] \tag{D152}$$

Once again we obtain an imaginary part together with a lower-order correction to

the real part which can be interpreted as a renormalization of the leading irrelevant coupling constants. Thus, keeping only lowest order real and imaginary parts, and combining elastic and inelastic contributions we have:

$$\Sigma^R = -\frac{in_i}{2\pi\nu}\left[2 + 3\pi i\lambda\omega - \frac{(3\pi\lambda)^2}{4}(3\omega^2 + \pi^2T^2)\right] \tag{D153}$$

Thus the single-particle lifetime is given by:

$$\frac{1}{\tau} \equiv -2\mathrm{Im}\Sigma^R = 2\frac{n_i}{\pi\nu}\left[1 - \frac{(3\pi\lambda)^2}{8}(3\omega^2 + \pi^2T^2)\right] \tag{D154}$$

We then obtain the conductivity from the Kubo formula:

$$\sigma(T) = 2\frac{e^2}{3m^2}\int\frac{d^3\vec{p}}{(2\pi)^3}\left[-\frac{dn}{d\epsilon_p}\right]\vec{p}^2\tau(\epsilon_p) \tag{D155}$$

giving a resistivity:

$$\rho(T) = \frac{3n_i}{\pi(ev_F\nu)^2}\left[1 - \left(\frac{3\pi\lambda}{2}\right)^2\pi^2T^2\right] \tag{D156}$$

As shown in Reference (1) the susceptibility and specific heat are first order in λ. They can be most easily calculated by observing that the irrelevant interaction of Equation (132) is proportional to the Hamiltonian density in the spin sector. It was argued in Reference (1) that, to first order in λ it is equivalent to replace the $\delta(x)$ in the interaction term by a factor of $1/2l$. ie. by translational invariance in the first order perturbation calculation we may smear the interaction over the entire line. Therefore the Hamiltonian density becomes simply:

$$\mathcal{H} = \frac{1}{6\pi}\left(1 - \frac{3\pi\lambda}{l}\right)\vec{J}^2 \tag{D157}$$

It then follows by a simple scaling argument that the susceptibility shift for a single impurity is:

$$\frac{\delta\chi}{\chi_1} \approx \frac{3\pi\lambda}{l} \tag{D158}$$

(Note that this factor is given incorrectly in Reference (1).) Here $\chi_1 = 1/2\pi l$ is the bulk susceptibility for the one-dimensional system (consisting of left-movers on a line of length $2l$ or equivalently left and right movers on a line of length l). Since the low-temperature bulk susceptibility is proportional to the density of states the ratio of one-dimensional to three dimensional susceptibilities is given by $\chi_1/\chi_3 = l/\pi V\nu$ where V is the volume. Thus the three-dimensional susceptibility for a finite impurity density, n_i, is:

$$\frac{\chi_3}{V} = \frac{(g\mu_B)^2}{2}[\nu + 3n_i\lambda] \tag{D159}$$

where μ_B is the Bohr magneton and g is the gyromagnetic ratio. Similarly the specific heat is given by:

$$\frac{C(T)}{V} = \frac{2\pi^2}{3}T\left[\nu + \frac{3n_i\lambda}{2}\right] \tag{D160}$$

exhibiting the Wilson ratio $(\delta\chi/\chi)/(\delta C/C) = 2$.

Comparing to the original results of Nozières[12], we see that his parameter, α defined in terms of the energy-dependence of the phase shift by $\delta(\omega) = \pi/2 + \alpha\omega$, is related to the irrelevant coupling constant in our approach by:

$$\alpha = 3\pi\lambda/2 \tag{D161}$$

The results obtained in this appendix are then in complete agreement with those given in terms of α for the susceptibility, specific heat and resistivity in Equation (23)-(30) of Reference (12). [The density of states parameter ρ appearing in those equations corresponds to νV.] We remark that in the exactly screened case with k channels and spin $s = k/2$, the resistivity is simply divided by a factor of k. The susceptibility is multiplied by a factor of k and the specific heat becomes:

$$\frac{C(T)}{V} = \frac{2\pi^2 k}{3} T \left[\nu + \frac{9kn_i\lambda}{2(2+k)} \right] \tag{D162}$$

Here the Wilson ratio,

$$\frac{(\delta\chi/\chi)}{(\delta C/C)} = \frac{2(2+k)}{3} \tag{D163}$$

measures the ratio of the total specific heat to that coming from the spin degrees of freedom.

Finally we remark on the effect of particle-hole symmetry breaking, following the discusson in Section IV. The self-energy can now be written:

$$\Sigma^R = -\frac{in_i}{2\pi\nu} \left[1 - e^{2i(\pi/2+\delta_P+3\pi\lambda\omega/2)} - e^{2i\delta_P} \left(\frac{3\pi\lambda}{2} \right)^2 (\omega^2 + \pi^2 T^2) \right] \tag{D164}$$

where δ_P is the additional, energy-independent, phase shift coming from potential scattering. The corresponding resistivity is:

$$\rho(T) = \frac{3n_i}{2\pi(ev_F\nu)^2} \left\{ [1 + \cos(2\delta_P)] - \frac{4\cos(2\delta_P)}{1+\cos(2\delta_P)} \left(\frac{3\pi\lambda}{2} \right)^2 \pi^2 T^2 \right\} \tag{D165}$$

APPENDIX E: THE G-THEOREM

In this appendix we give the details of our perturbative proof[4] of the "g-theorem". Here g refers to the "groundstate degeneracy" or the exponential of the residual entropy. In quantum impurity problems this, in general, has a non-zero value, arising from the impurity, which is independent of the size of the system and is therefore dimensionless. [The order of limits is crucial. We first must take the size of the system to infinity and afterwards take the temperature to zero.] The g-theorem states that under renormalization between two different boundary fixed points (associated with the same bulk critical point) g always decreases. This is closely related to Zamolodchikov's c-theorem[20,21] which states that the conformal anomaly parameter c, proportional to the coefficient in the linear specific heat, decreases under renormalization between two different *bulk* critical points.

We are, so far, only able to prove this conjectured theorem perturbatively. Specifically, we consider some boundary critical point and then perturb it with a barely relevant primary boundary operator of dimension $x = 1 - y$ with $0 < y << 1$. Assuming that the β-function for the corresponding coupling constant, λ, contains a non-zero quadratic term with a coefficient, b of $O(1)$, then there will be a nearby fixed point. ie.:

$$\beta(\lambda) \equiv d\lambda/d\ln L = y\lambda - b\lambda^2 \qquad \Rightarrow \lambda^* = y/b << 1 \tag{E166}$$

As will be shown below, we can calculate the change in g explicitly in terms of the β function parameters only, obtaining $\delta g/g = -\frac{\pi^2 y^3}{3b^2}$.

This calculation parallels closely the perturbative proof of the c-theorem in Reference (21). The basic idea is to expand the partition function, Z, perturbatively in λ, to $O[\lambda^3]$. We obtain non-universal (and ultra-violet divergent) terms which

are linear in β corresponding to groundstate energy corrections. From these we must distinguish terms which are independent of β corresponding to corrections to g. Actually we end up expressing δg in terms of the renormalized coupling constant evaluated at the scale set by the temperature, which acts as an infrared cut-off. Therefore these terms should have a weak temperature dependence which is consistent with the renormalization group.

We write the perturbation to the imaginary time action as:

$$\delta S = -a^{-y}\lambda \int_0^\beta d\tau \phi(\tau) \tag{E167}$$

The operator ϕ is assumed to have scaling dimension $1-y$ with $0 < y << 1$ and a unit normalized two-point function:

$$< \phi(\tau_1)\phi(\tau_2) >= \frac{1}{|\tau_1 - \tau_2|^{2(1-y)}} \tag{E168}$$

a is an ultraviolet cut-off with dimensions of length. We include the factor of a^{-y} so that the coupling constant, λ, is dimensionless. The three-point function has a form uniquely determined by conformal invariance up to an overall constant:

$$< \phi(\tau_1)\phi(\tau_2)\phi(\tau_3) >= -\frac{b}{|\tau_{12}|^{1-y}|\tau_{23}|^{1-y}|\tau_{31}|^{1-y}} \tag{E169}$$

It can be seen that the normalization constant, b determines the quadratic term in the β function. This follows from the OPE,

$$\phi(\tau)\phi(0) \rightarrow -\frac{b\phi(0)}{|\tau|^{1-y}} \tag{E170}$$

Expanding the partition function to quadratic order in λ and using the operator product expansion we obtain:

$$\begin{aligned} e^{-\delta S} &= ... + \frac{1}{2}a^{-2y}\lambda^2 \int d\tau_1 d\tau_2 \phi(\tau_1)\phi(\tau_2) \\ &= ... + \frac{1}{2}a^{-2y}\lambda^2 \int d\tau_1 \phi(\tau_1) \int d\tau_2 \frac{-b}{|\tau_1 - \tau_2|^{1-y}} \end{aligned} \tag{171}$$

We introduce an infrared cut-off l on the τ-integral as well as the ultraviolet one, a. The role of l will be played by the inverse temperature, β below. We may now interpret this term as a correction to λ of the form:

$$\delta\lambda = -b\lambda^2 \ln(l/a) \tag{E172}$$

where we have set $y \approx 0$. This gives the quadratic term in the β function:

$$\frac{d\lambda}{d\ln l} = ... - b\lambda^2 \tag{E173}$$

We now proceed to calculate Z perturbatively in λ. We may assume that $< \phi >= 0$ at $T = 0$. This remains true at finite T since ϕ is assumed to be a Virasoro primary field. To cubic order the partition function is:

$$\begin{aligned} \frac{Z}{Z_0} \approx 1 &+ \frac{1}{2!}a^{-2y}\lambda^2 \int d\tau_1 d\tau_2 \mathcal{T} < \phi_1(\tau_1)\phi_2(\tau_2) > \\ &+ \frac{1}{3!}a^{-3y}\lambda^3 \int d\tau_1 d\tau_2 d\tau_3 \mathcal{T} < \phi_1(\tau_1)\phi_2(\tau_2)\phi_3(\tau_3) > \end{aligned} \tag{174}$$

Here Z_0 is the partition function when $\lambda = 0$.

We now consider the quadratic term in Z/Z_0. This gives:

$$Z_2 = \frac{1}{2}a^{-2y}\lambda^2 \int \frac{d\tau_1 d\tau_2}{|\frac{\beta}{\pi}sin\frac{\pi}{\beta}(\tau_1 - \tau_2)|^{2(1-y)}}$$
$$= \frac{1}{2}a^{-2y}\lambda^2\beta \int_{-\beta/2}^{\beta/2} \frac{d\tau}{|\frac{\beta}{\pi}sin\frac{\pi}{\beta}(\tau)|^{2(1-y)}} \tag{175}$$

We regulate the theory by cutting off the τ integral: $|\tau| > a$. To proceed we make a mapping from the circle to the infinite line:

$$u = \tan\frac{\pi}{\beta}\tau \tag{E176}$$

The integral then becomes:

$$Z_2 = \frac{\pi}{2}\lambda^2\left(\frac{\beta}{\pi a}\right)^{2y} \int \frac{du}{(1+u^2)^y|u|^{2(1-y)}} \tag{E177}$$

The integral runs from $u = -\infty$ to ∞ except for the region $|u| < \pi a/\beta$. Integrating by parts, this becomes:

$$Z_2 = \frac{\pi}{2}\lambda^2\left(\frac{\beta}{\pi a}\right)^{2y} 2\left[-\frac{1}{(1+u^2)^y(1-2y)u^{1-2y}}\Bigg|_{\pi a/\beta}^{\infty} - \frac{2y}{1-2y}\int_0^\infty \frac{duu^{2y}}{(1+u^2)^{1+y}}\right] \tag{E178}$$

Since the second term already has a coefficient of $O(y)$, we set $y \to 0$ inside the integral. [All calculation are carried out to $O(y^3)$ only.] This gives:

$$Z_2 = \frac{\pi}{2}\lambda^2\left(\frac{\beta}{\pi a}\right)^{2y} 2\left[\left(\frac{\beta}{\pi a}\right)^{1-2y} - \pi y\right] \tag{E179}$$

Note that the first term is linear in β and hence corresponds to a groundstate energy correction, of no interest to us. The second term is:

$$Z_2 = -\lambda^2\pi^2 y \left(\frac{\beta}{\pi a}\right)^{2y} \tag{E180}$$

Next we turn to the term cubic in λ. This is given by:

$$Z_3 = -b\frac{\lambda^3 a^{-3y}}{3!}\int \frac{d\tau_1 d\tau_2 d\tau_3}{|\left(\frac{\beta}{\pi}\right)^3 sin\frac{\pi}{\beta}(\tau_1-\tau_2)sin\frac{\pi}{\beta}(\tau_2-\tau_3)sin\frac{\pi}{\beta}(\tau_3-\tau_1)|^{1-y}} \tag{E181}$$

This is again regulated by restricting the integration to $|\tau_i - \tau_j| > a$, for $i \neq j$. We again may integrate over one of the τ variables and then change variables to $u_i = tan\frac{\pi}{\beta}\tau_i$ giving:

$$Z_3 = -b\frac{\lambda^3}{3!}\pi\left(\frac{\beta}{\pi a}\right)^{3y}\int \frac{du_1 du_2}{[(1+u_1^2)(1+u_2^2)]^y|u_1u_2(u_1-u_2)|^{1-y}} \tag{E182}$$

where the integrals run over $-\infty$ to ∞ with a regularization $|u_i| > \pi a/\beta$, $|u_1 - u_2| > \pi a/\beta$. It turns out to be convenient to change variables from u_2 to v defined by $u_2 = vu_1$. Z_3 becomes:

$$Z_3 = -b\frac{\lambda^3}{3!}\pi\left(\frac{\beta}{\pi a}\right)^{3y}\int \frac{du_1 dv}{[(1+u_1^2)(1+v^2u_1^2)]^y|u_1|^{2-3y}|v(1-v)|^{1-y}} \tag{E183}$$

The regularization now implies:

$$|u_1| > u_0(v) \equiv \max\left\{\frac{\pi a}{\beta}, \frac{\pi a}{\beta|v|}, \frac{\pi a}{\beta|1-v|}\right\} \tag{E184}$$

Next we integrate by parts with respect to u_1, giving:

$$Z_3 = -b\frac{\lambda^3}{3!}\pi\left(\frac{\beta}{\pi a}\right)^{3y}\int_{-\infty}^{\infty} dv \frac{1}{|v(1-v)|^{1-y}}\left[\frac{-2}{[(1+u_1^2)(1+v^2u_1^2)]^y(1-3y)u_1^{1-3y}}\Bigg|_{u_0(v)}^{\infty}\right.$$
$$\left. -\frac{2y}{1-3y}\int_{-\infty}^{\infty}\frac{du_1}{[(1+u_1^2)(1+v^2u_1^2)]^y|u_1|^{2-3y}}\left(\frac{u_1^2}{1+u_1^2}+\frac{v^2u_1^2}{1+v^2u_1^2}\right)\right] \tag{185}$$

The surface term makes a contribution to Z_3 proportional to $\left(\frac{\beta}{\pi a}\right)^{3y}\left(\frac{\beta}{\pi a}\right)^{1-3y} \propto \frac{\beta}{a}$. This is another non-universal ultraviolet contribution to the groundstate energy of no interest to us. The remaining integral is ultraviolet finite. Thus to evaluate it in the limit $a/\beta \to 0$ we may remove the regulator. In fact, we will also be interested in the part of this integral of $O(a/\beta)$. We will return to this below. It is now convenient to change variables back to u_2 again. Our expression for Z_3 is now:

$$\begin{aligned} Z_3 &= b\frac{\lambda^3}{3!}\pi\left(\frac{\beta}{\pi a}\right)^{3y}\frac{2y}{1-3y}\int\frac{du_1du_2}{[(1+u_1^2)(1+u_2^2)]^y|u_1u_2(u_1-u_2)|^{1-y}}\left[\frac{u_1^2}{1+u_1^2}+\frac{u_2^2}{1+u_2^2}\right]+\ldots \\ &= b\frac{\lambda^3}{3!}\pi\left(\frac{\beta}{\pi a}\right)^{3y}\frac{4y}{1-3y}\int\frac{du_1du_2}{[(1+u_1^2)(1+u_2^2)]^y|u_1u_2(u_1-u_2)|^{1-y}}\frac{u_1^2}{1+u_1^2}+\ldots \end{aligned} \tag{186}$$

where ... represent groundstate energy corrections. We are only interested in evaluating Z_3 in the limit $y \to 0$, since it is already $O(\lambda^3)$. The explict factor of y in the numerator is cancelled by a divergence of the integral as $y \to 0$. Performing the u_2 integral first, we see that there is a divergence as $y \to 0$ from the region $u_2 \approx 0$ and also $u_2 \approx u_1$. Near $u_2 = 0$ we may approximate the u_2 integral as:

$$\int\frac{du_2}{(1+u_2^2)^y|u_2(u_1-u_2)|^{1-y}} \approx \frac{1}{|u_1|^{1-y}}\int\frac{du_2}{|u_2|^{1-y}} \approx \frac{2}{y|u_1|^{1-y}} \tag{E187}$$

There is an equal contribution from $u_2 \approx u_1$. Substituting this aproximate evaluation of the u_2 integral into Z_3 gives:

$$Z_3 = b\frac{\lambda^3}{3!}\pi\left(\frac{\beta}{\pi a}\right)^{3y}\frac{4y}{1-3y}\frac{4}{y}\int_{-\infty}^{\infty}\frac{du_1u_1^2}{|u_1|^{2(1-y)}(1+u_1^2)} \tag{E188}$$

Taking the limit $y \to 0$, this gives the elementary integral:

$$Z_3 = b\frac{\lambda^3}{3!}\pi\left(\frac{\beta}{\pi a}\right)^{3y}16\int_{-\infty}^{\infty}\frac{du_1}{(1+u_1^2)}$$

$$= 16b\frac{\lambda^3}{3!}\pi^2\left(\frac{\beta}{\pi a}\right)^{3y} \tag{189}$$

So far we have explicitly examined terms in Z_3 of $O(\beta/a)$ (groundstate energy) and $O[\left(\frac{\beta}{a}\right)^{3y}]$. We will also be interested in the term of $O[\left(\frac{\beta}{a}\right)^{2y}]$. This comes from a term of $O[\left(\frac{a}{\beta}\right)^{y}]$ in the integral of Equation (E182). In order to extract this term, it is convenient to differentiate the integral with respect to $\epsilon \equiv a\pi/\beta$. Introducing explicit step functions the integral can be written:

$$I(\epsilon) = \int_{-\infty}^{\infty} \frac{du_1 du_2}{[(1+u_1^2)(1+u_2^2)]^y |u_1 u_2 (u_1 - u_2)|^{1-y}} \theta(u_1^2 - \epsilon^2)$$
$$\theta(u_2^2 - \epsilon^2)\theta[(u_1 - u_2)^2 - \epsilon^2] \tag{190}$$

We obtain three equal contributions from differentiating the three step functions, giving:

$$\frac{dI}{d\epsilon} \approx \frac{6}{\epsilon^{1-y}} \int_{-\infty}^{\infty} \frac{du_1}{(1+u_1^2)^y |u_1|^{2(1-y)}} \theta(u_1^2 - \epsilon^2) \tag{E191}$$

We recognize this integral as the same one which occurred in the calculation of Z_2, Equation (E177). Using the result of Equation (E179) we obtain:

$$\frac{dI}{d\epsilon} = \frac{12}{\epsilon^{2-3y}} - \frac{12\pi y}{\epsilon^{1-y}} \tag{E192}$$

Thus,

$$I(\epsilon) = -\frac{12}{(1-3y)\epsilon^{1-3y}} - 12\pi\epsilon^y + \text{constant} \tag{E193}$$

The first term is simply the groundstate energy term in Z_3 and the constant is the

part calculated [illegible] [Equation (189)]. The second term is the one that we are after. Thus, ignoring groundstate energy corrections and terms of higher order in y, we have:

$$\frac{Z}{Z_0} = 1 - \pi^2 y \left[\lambda \left(\frac{\beta}{\pi a}\right)^y\right]^2 - b\left[\lambda\left(\frac{\beta}{\pi a}\right)^y\right]^3 \left[-\frac{8\pi^2}{3} + 2\pi^2\left(\frac{\pi a}{\beta}\right)^y\right] \tag{E194}$$

Solving the renormalization group equation, Equation (E166) for the bare coupling, λ, as a function of the renormalized coupling at the scale set by the temperature, $\lambda(\beta)$, we obtain:

$$\lambda = \left(\frac{a}{\beta}\right)^y \frac{\lambda(\beta)}{1 - \frac{\lambda(\beta)}{\lambda^*}\left[1 - \left(\frac{a}{\beta}\right)^y\right]} \tag{E195}$$

Assuming $\lambda(\beta) << \lambda^*$ and expanding in powers of $\lambda(\beta)$ we find:

$$\left[\left(\frac{\beta}{a}\right)^y \lambda\right]^2 \approx \lambda(\beta)^2 + 2\frac{\lambda(\beta)^3}{\lambda^*}\left[1 - \left(\frac{a}{\beta}\right)^y\right] \tag{E196}$$

Using $\lambda^* = y/b$, we find that we can rewrite Z/Z_0 entirely in terms of the renormalized coupling constant, to the order that we are working:

$$\begin{aligned}\frac{Z}{Z_0} &= 1 - \pi^2 y\lambda(\beta)^2 + b\lambda(\beta)^3\left[-2\pi^2 + \frac{8\pi^2}{3}\right] \\ &= 1 - \pi^2 y\lambda(\beta)^2 + \frac{2\pi^2}{3} b\lambda(\beta)^3 \end{aligned} \tag{197}$$

We expect all higher order terms to also be expressible in terms of the renormalized coupling constant, apart from non-universal groundstate energy corrections. As $T \to 0$, $\lambda(\beta) \to \lambda^* = y/b$. Thus all term of higher order in perturbation theory make corrections of higher order in y. Hence, to $O(y^3)$ the change in lnZ at $T = 0$ is:

$$\delta g/g \equiv \delta Z/Z(T=0) = -\frac{\pi^2 y^3}{3b^2} \tag{E198}$$

Note that this is negative, implying that g decreases under renormalization between fixed points.

We would like to acknowledge useful conversations with D. Cox, G. Kotliar and C. Varma. One of us (IA) acknowledges the hospitality of the Aspen Center for Physics where part of this work was completed. This research was supported in part by NSERC of Canada.

---

*Present address: Physics Department, Princeton University, Princeton, NJ08544.

[1]I. Affleck, Nucl. Phys. B336, 517 (1990).

[2]I. Affleck and A.W.W. Ludwig, Nucl. Phys. B352, 849 (1991).

[3]I. Affleck and A.W.W. Ludwig, Nucl. Phys. B360, 641 (1991).

[4]I. Affleck and A.W.W. Ludwig, Phys. Rev. Lett. 67, 161 (1991).

[5]A.W.W. Ludwig and I. Affleck, Phys. Rev. Lett., 67, 3160 (1991).

[6]I. Affleck and A.W.W. Ludwig, Phys. Rev. Lett. 68, 1046 (1992).

[7]I. Affleck, A.W.W. Ludwig, H.-B. Pang and D.L. Cox, Phys. Rev. B45, 7918 (1992).

[8]A.W.W. Ludwig and I. Affleck, in preparation.

[9]J.L. Cardy, Nucl. Phys. B324, 581 (1989); D. Lewellen and J.L. Cardy, Phys. Lett. B259, 274 (1991).

[10]We reported this large-k calculation in Ref. (5). It was reported independently by J. Gan, N. Andrei and P. Coleman, Rutgers preprint.

[11]*Handbook of Mathematical Functions*, (ed. M. Abramowitz and I.A. Stegun, Dover, New York, 1964).

[12]P. Nozières, J. Low Temp. Phys. 17, 31 (1974); P. Nozières, *Proceedings of the* 14th *Int.'l Conf. on Low Temp. Phys.* (ed. M. Krusius and M. Vuorio, North Holland, Amsterdam, 1974) V.5, p. 339.

[13]I.S. Gradshteyn and I.M. Ryzhik, *Table of Integrals, Series, and Products*, Academic, New York, 1980.

[14]E. Verlinde, Nucl. Phys. B300, 360 (1988).

[15]A.M. Tsvelick, J. Phys. C18, 159 (1985).

[16]V.G. Kac and K. Peterson, Adv. Math. 53, 125 (1984).

[17]see for example S.Doniach and E.H.Sondheimer, *Green's Functions for Solid State Physicists*; Benjamin/Cummings Publ. Comp., London (1974) or G.D. Mahan, *Many-Particle Physics*; Plenum Press, New York (1981).

[18]N. Andrei and C. Destri, Phys. Rev. Lett. 52, 364 (1984). ; P.B. Wiegmann and A.M. Tsvelick, Z. Phys. B54, 201 (1985).

[19]N.E. Bickers, D.L. Cox and J.W. Wilkins, Phys. Rev. B36, 2036 (1987).

[20]A.B. Zamolodchikov, J.E.T.P. Lett. 43, 730 (1986).

[21]A.W.W. Ludwig and J.L. Cardy, Nucl. Phys. B285, 687 (1987).

FIG. 1. Deformation of integration contour in Eq. (71) from the pole to the branch cut. Note the circular section of the deformed contour surrounding the branch point

FIG. 2. Integration contour and branch cuts defining the integrand in Equation (B109)

FIG. 3. Deformation of the integration contour in Equation (B109) to the first branch cut

FIG. 4. Integration contour and branch cuts (denoted by thick lines) for the Equation (B109) for $|w| > 1$: a) $\mathrm{Im}w \to 0^+$, b) $\mathrm{Im}w \to 0^-$

FIG. 5. Phase of the integrand in Equation (B109) just above and just below the real positive v-axis for either phase of w

FIG. 6. The two Feynman diagrams corresponding to the two interactions in Equation (132)

FIG. 7. The second order contributions to the self-energy at the Fermi liquid fixed point

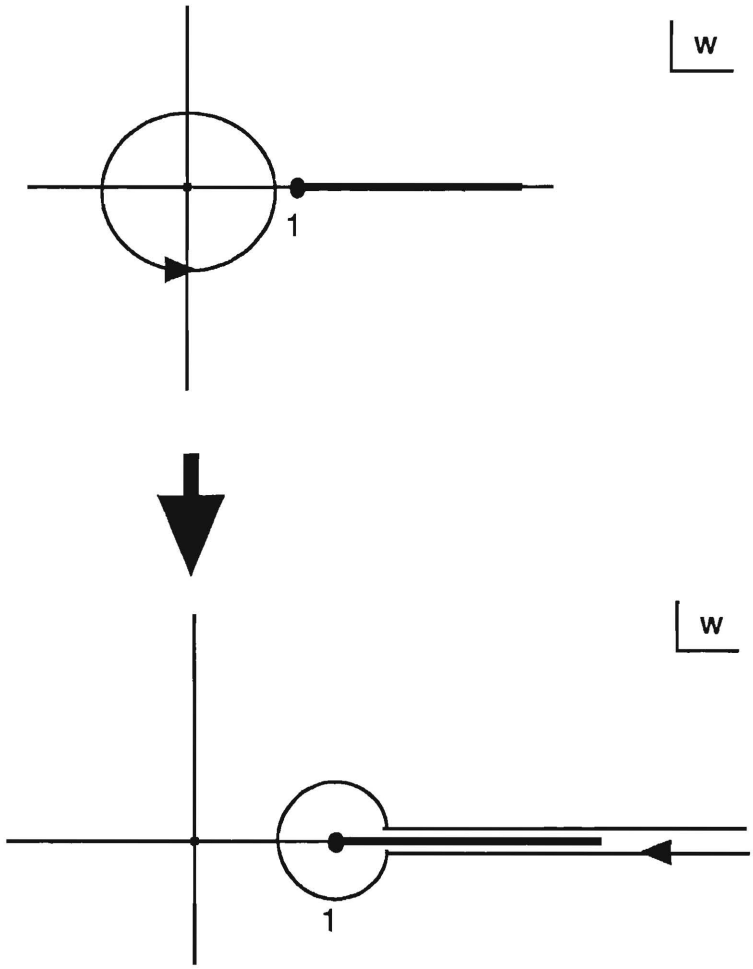

Figure 1

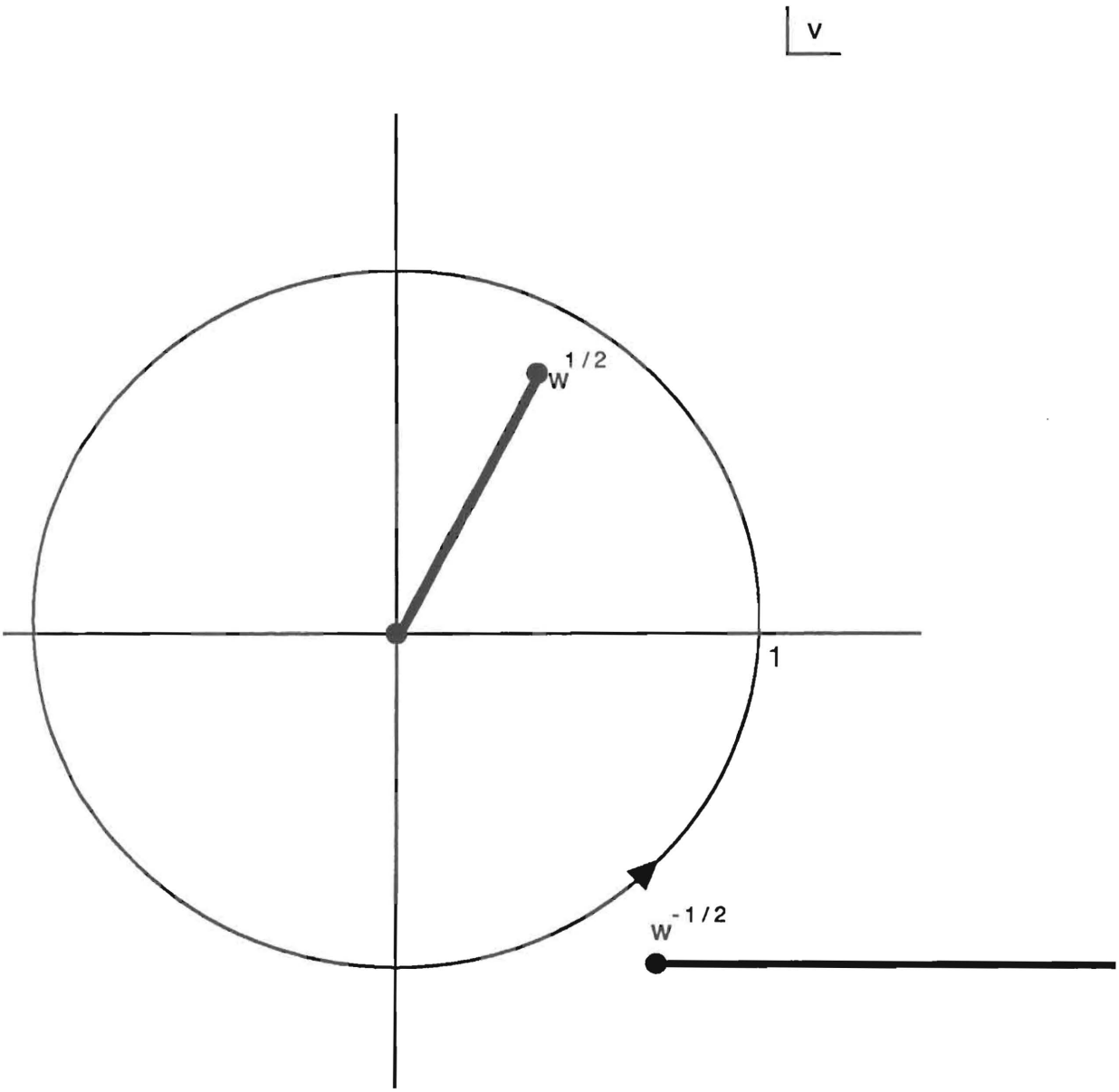

Figure 2

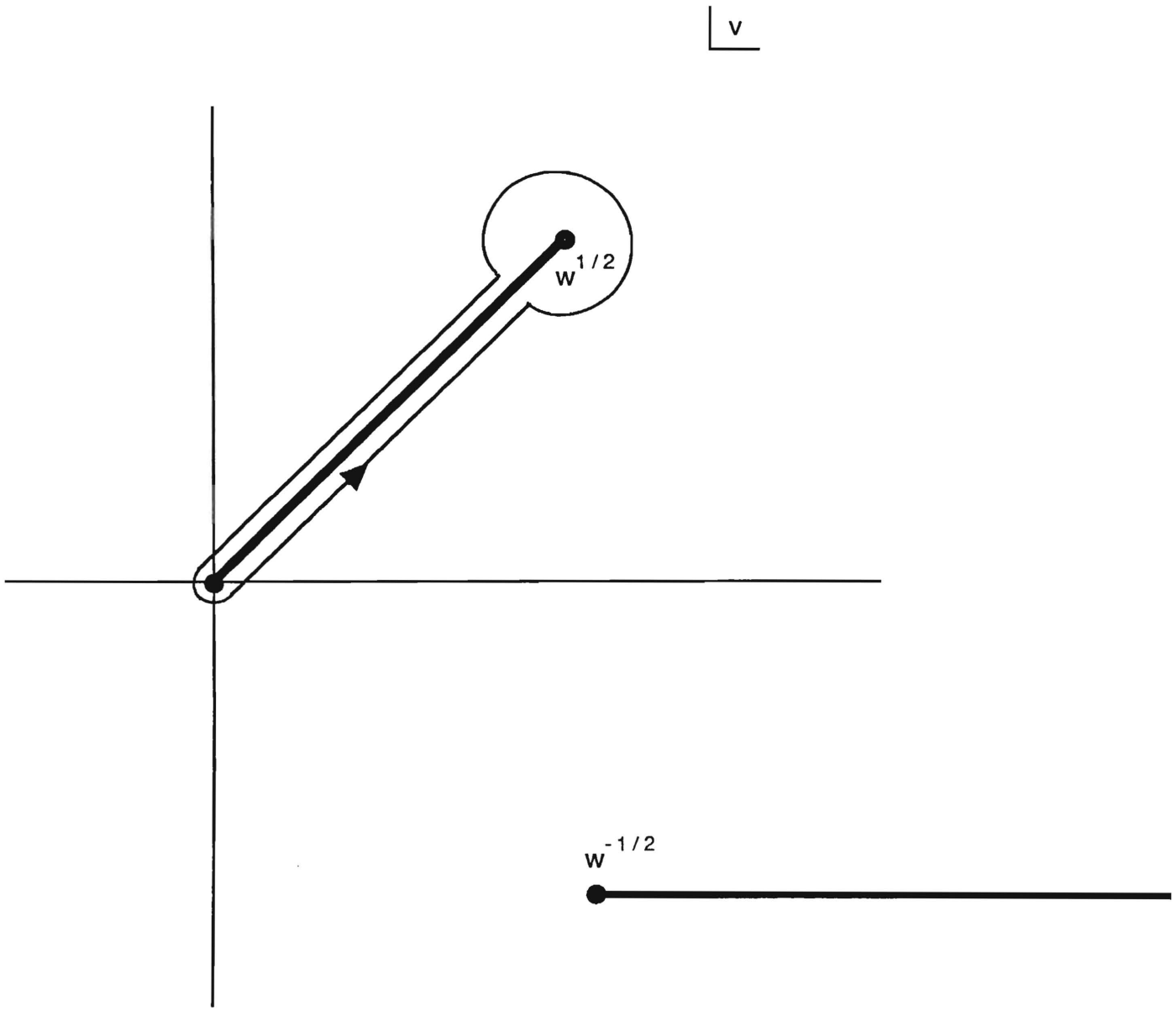

Figure 3

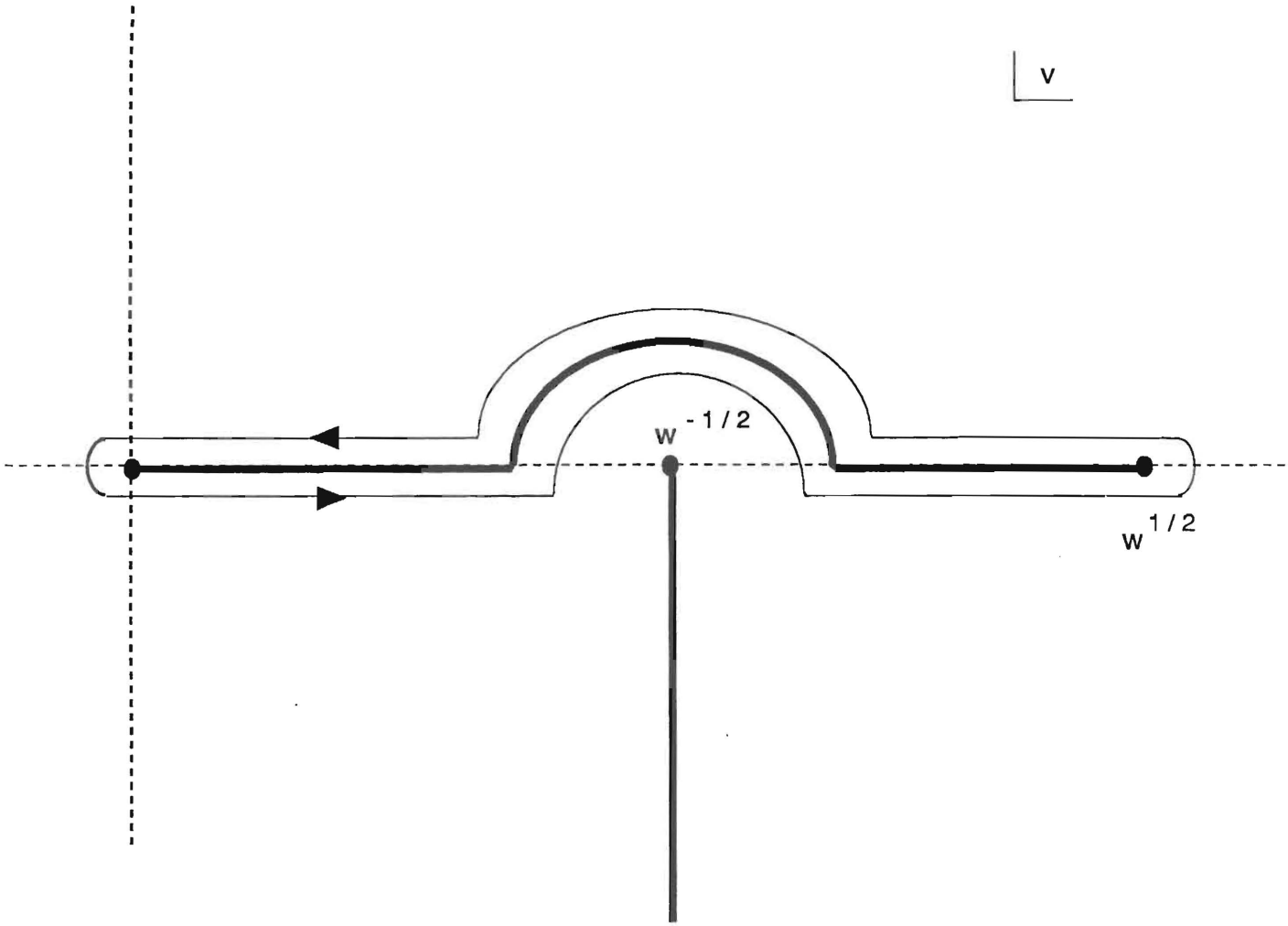

Figure 4a

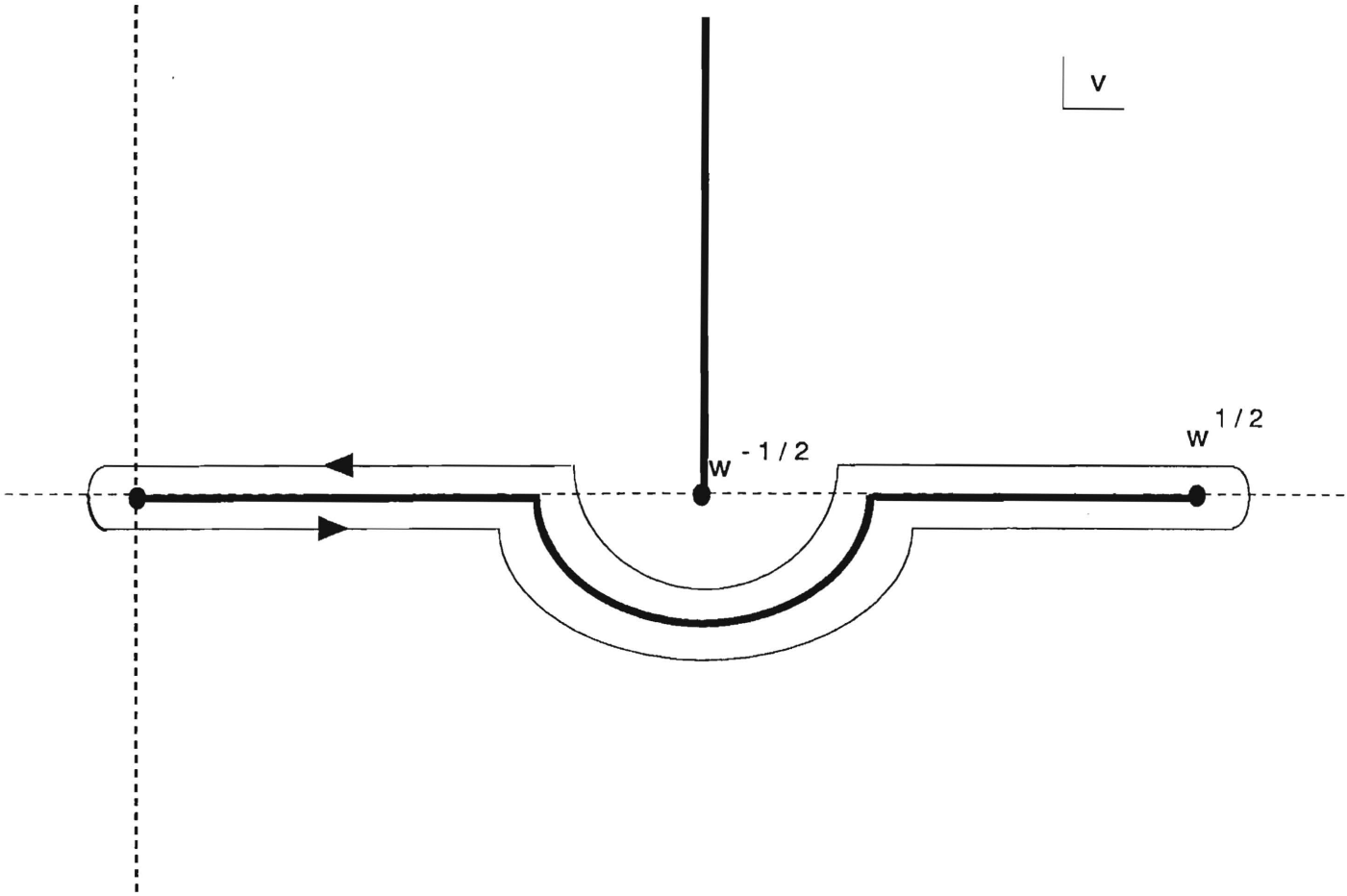

Figure 4b

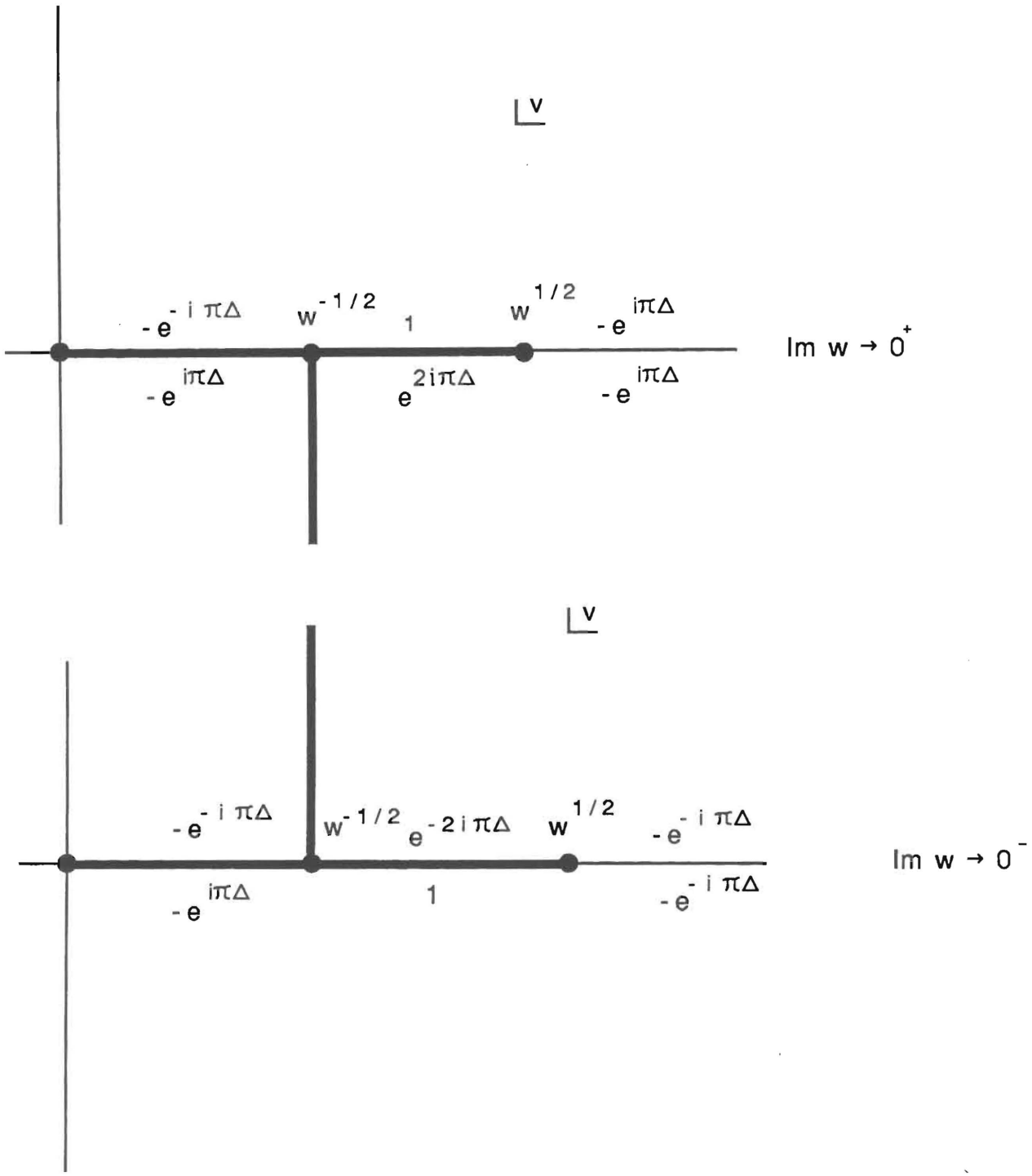
v
$-e^{-i\pi\Delta}$
$w^{-1/2}$
1
$w^{1/2}$
$-e^{i\pi\Delta}$
$-e^{i\pi\Delta}$
$e^{2i\pi\Delta}$
$-e^{i\pi\Delta}$
Im w → 0+
v
$-e^{-i\pi\Delta}$
$w^{-1/2}$
$e^{-2i\pi\Delta}$
$w^{1/2}$
$-e^{-i\pi\Delta}$
$-e^{i\pi\Delta}$
1
$-e^{-i\pi\Delta}$
Im w → 0-

Figure 5

Figure 6

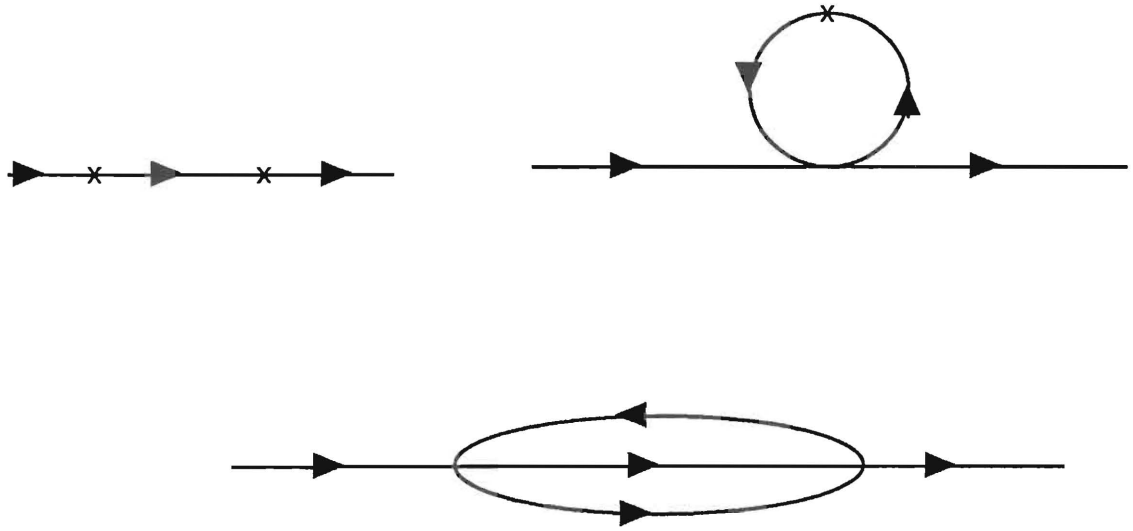

Figure 7