TU-472

November,1994

Consequences from A Consistency Condition for Relativistic Composite Systems

FERMILAB

DEC 7 199

LIBRAR

Fujio Takagi

Department of Physics,Tohoku University,Aramaki,Aoba-ku

Sendai 980-77, Japan

Abstract

The total energy-momentum of a finite composite system should have a correct property for Lorentz transformation. Consequences from this consistency condition with the classical picture for the constituent motion are studied in detail. It is found that (i) the rapidity distribution of the constituent particles in a boosted frame is not just a simple translation of the distribution in the c.m. system but is given by the translated distribution multiplied by a distortion factor; (ii) the distortion factor implies existence of a scalar-type effective interaction; (iii) the distorted rapidity distribution gives a correct expression for the energy-momentum tensor of a relativistic gas. A kind of virial theorem is proved for the case where a constituent particle is massless. Lorentz transformation property of the yo-yo mode of a color-flux tube with particles (quarks) at the ends is elucidated as an example.

TU-472

33

Fermilab Library

0 1160 0054220 3

1. Introduction

In general, it is highly nontrivial to construct a fully relativistic wave function for a composite system made of many constituent particles. An approximate method is used in most cases. In this paper, we consider a relativistic composite system within a classical picture and study under what conditions the energy-momentum of the system has a correct Lorentz transformation property. The starting point of our argument is the rapidity distribution of the constituents . A remarkable result is obtained from the fact that a constituent is confined in a finite region of constant volume. The rapidity distribution in the boosted frame is not merely a translated c.m. rapidity distribution but a translated distribution multiplied by a distortion factor as will be shown in sec.2. In sec.3, the distorted rapidity distribution is used to calculate the contribution from the constituents to the energy-momentum of the system in the boosted frame, and it is shown that an additional contribution (scalar-type potential energy) is necessary in order that the total energy-momentum of the system is transformed correctly under a Lorentz boost. As an application, the distorted rapidity distribution is further used to calculate the energy-momentum tensor of a relativistic gas in sec.4. The well-known result is reproduced correctly. In section 5, contributions to the invariant mass of the composite system from the constituent energy and the interaction energy are calculated for an isotropic gas. A simple bag-model like virial theorem is obtained for the case where the constituent particle is massless. In section 6, the yo-yo mode of a color-flux tube with quarks at the ends is

examined as another example. Section 7 is devoted to conclusions and discussions.

2. Rapidity distribution of constituents in a boosted frame

As an illustration, consider first a simple one-dimensional case where a constituent particle moves back and forth periodically along a longitudinal direction with velocity $\pm v_0$ ($v_0 > 0$) in the c.m.system. If the length of the system is L, the time a constituent takes to start at one end E_L, move forward and reach another end E_R is given by

$$t_F = L / v_0. \tag{2.1}$$

It is obvious that the corresponding time for the backward motion from E_R to E_L is the same;

$$t_B = L / v_0. \tag{2.2}$$

Then, it is also obvious that the probability $P(y_0)$ to find a constituent with velocity $v_0 = \tanh y_0$ is equal to the probability $P(-y_0)$ to find a constituent with velocity $-v_0 = \tanh(-y_0)$. (The light velocity is taken to be unity throughout this paper.) The "time-averaged" normalized rapidity distribution of the constituents is given by

$$D_0(y) = \{ \delta(y - y_0) + \delta(y + y_0) \} / 2. \tag{2.3}$$

In the boosted frame where the center of mass of the system moves with velocity $V = \tanh Y$, the corresponding period for the forward motion from E_L to E_R and the same for the subsequent motion from E_R to E_L are given, respectively, by

$$t'_F = L\sqrt{1 - V^2} \Big/ (v_F - V), \tag{2.4a}$$

$$t'_B = L\sqrt{1 - V^2} \Big/ (V - v_B), \tag{2.4b}$$

where

$$v_F = \tanh(Y+y_0), \tag{2.5a}$$

$$v_B = \tanh(Y-y_0). \tag{2.5b}$$

Then, the probabilities that a constituent at one instant is on the way of its journey from E_L to E_R with velocity v_F or the one from E_R to E_L with velocity v_B are given, respectively, by

$$t'_F / (t'_F + t'_B) = \cosh(Y+y_0)/(2\cosh Y \cosh y_0)$$
$$= P(y_0,Y), \tag{2.6a}$$

$$t'_B / (t'_F + t'_B) = \cosh(Y-y_0)/(2\cosh Y \cosh y_0)$$

$$= P(-y_0, Y). \tag{2.6b}$$

Note that $P(y_0, Y) > P(-y_0, Y)$. Accordingly the rapidity distribution $D_Y(y)$ in the boosted frame is not just a translated distribution $D_0(y-Y)$ but is given by

$$D_Y(y) = \Delta(y,Y) D_0(y-Y), \tag{2.7}$$

where

$$\begin{aligned} \Delta(y,Y) &= 2P(y-Y,Y) \\ &= \cosh y \,/(\cosh Y \cosh(y-Y)). \end{aligned} \tag{2.8}$$

Essentially the same result holds for a more general three dimensional case where the rapidity-transverse momentum distribution of the constituents is continuous;

$$D_Y(y, \vec{p}_T) = \Delta(y,Y) D_0(y-Y, \vec{p}_T), \tag{2.9}$$

where $\vec{p}_T$ is the transverse momentum of the constituent. The proof goes as follows.

Consider a motion of a constituent particle during a sufficiently long time T in c.m. system. (It is enough to take T as a period of the motion when it is periodic.) Let the total time during which the particle moves with rapidity [y,y + dy] be $\tau(y)dy$. By definition, one has the normalization condition

$$\int_{-\infty}^{\infty} dy\ \tau(y) = T. \tag{2.10}$$

The probability to find a particle with rapidity [y,y+dy] at a time is $\tau(y)dy/T$. (Note that this argument does not apply to a free particle with no interaction at any time. In such a case, a particle moves with constant rapidity forever through an infinite space.) Therefore, the rapidity-transverse momentum distribution of the constituents is given in the following form;

$$D_0(y, \vec{p}_T) = N\tilde{\tau}(y, \vec{p}_T)/T, \tag{2.11}$$

where

$$\int_m^{\infty} d^2\vec{p}_T \tilde{\tau}(y, \vec{p}_T) = \tau(y). \tag{2.12}$$

A particle with rapidity y travels a distance $\tanh y \cdot \Delta t$ during a short time Δt. In the boosted frame with boost rapidity Y, the same motion takes a time

$$\Delta t' = \cosh(Y+y)\ \Delta t \ /\ \cosh y. \tag{2.13}$$

As the rapidity y' of the constituent with c.m. rapidity y is equal to y + Y in the boosted frame, the rapidity distribution in the boosted frame is given as

$$D_Y(y', \vec{p}_T) = F(\cosh(y+Y)/\cosh y) D_0(y, \vec{p}_T)$$

$$= F\{\cosh y'/\cosh(y'-Y)\}D_0(y'-Y,\vec{p}_T),$$

that is,

$$D_Y(y,\vec{p}_T) = F\{\cosh y/\cosh(y-Y)\}D_0(y-Y,\vec{p}_T), \tag{2.14}$$

where F is the normalization factor to be determined by the following condition;

$$\int dy \int d^2\vec{p}_T D_Y(y,\vec{p}_T) = \int dy \int d^2\vec{p}_T D_0(y,\vec{p}_T). \tag{2.15}$$

Equations (2.14) and (2.15) give $F = 1/\cosh Y$, yielding (2.9), provided the mean velocity of the constituents in the c.m. system is vanishing:

$$\int_{-\infty}^{\infty} dy \int d^2\vec{p}_T \tanh y \; D_0(y,\vec{p}_T) = 0. \tag{2.16}$$

Equation (2.16) holds if $D_0(y,\vec{p}_T)$ is an even function of y.

Behavior of the distortion factor for various Y is shown in Fig.1. There is no distortion i.e., $\Delta(y,Y) = 1$ if $Y = 0$, while, for positive Y, $\Delta(y,Y) < 1$ for $y < Y$ and $\Delta(y,Y) > 1$ for $y > Y$ corresponding, respectively, to suppression and enhancement compared to the translated distribution $D_0(y-Y,\vec{p}_T)$. As seen in Fig.1, the distortion factor approaches the following asymptotic form very quickly as $Y \to \infty$ at a fixed $y - Y$;

$$\lim_{Y\to\infty} \Delta(y,Y)|_{y-Y \text{ fixed}} = e^{y-Y}/\cosh(y-Y). \tag{2.17}$$

The curve for $Y = 2$ is already almost asymptotic. As an example, the distorted distribution $D_6(y)$ and the translated distribution $D_0(y-6)$ are shown in Fig.2 for the following choice of $D_0(y)$;

$$D_0(y) = 5\exp(-0.1\cosh y), \tag{2.18}$$

which is also shown in Fig.2. The effect of the distortion factor is really dramatic.

Figs.1 and 2

---

3. Energy momentum of the system

Equation (2.9) with (2.8) is the most important result of the present paper. Using this formula, one can derive various consequences on the properties of a relativistic composite system. We first consider the energy and momentum of the system. Contribution to the rest mass of the system from the constituent particles is given by

$$M_c = \int_{-\infty}^{\infty} dy \int d^2\vec{p}_T m_T \cosh y \; D_0(y,\vec{p}_T), \tag{3.1}$$

where m_T is the transverse mass of the constituent i.e., $m_T = (m^2 + \vec{p}_T^{\,2})^{1/2}$ and m the constituent mass. Similarly, the contribution from the constituents to the energy and the longitudinal momentum of the system in the boosted frame is given by

$$E_c = \int_{-\infty}^{\infty} dy \int d^2\vec{p}_T \; m_T \cosh y \; D_Y(y,\vec{p}_T)$$

$$= M_c \cosh Y + 2I \sinh^2 Y/\cosh Y, \tag{3.2}$$

$$p_{cL} = \int_{-\infty}^{\infty} dy \int d^2\vec{p}_T \; m_T \sinh y \; D_Y(y,\vec{p}_T)$$

$$= M_c \sinh Y + 2I \sinh Y, \tag{3.3}$$

where

$$I = \int_{-\infty}^{\infty} dy \int d^2\vec{p}_T \; m_T (\sinh^2 y/\cosh y) \; D_0(y,\vec{p}_T). \tag{3.4}$$

It is apparent that E_c and p_{cL} alone do not form correct components of a Lorentz 4 vector since $E_c^2 - p_{cL}^2 \neq M_c^2$ owing to the terms proportional to the positive quantity I. Note that there would have been no such terms if $\Delta(y,Y)$ were equal to unity (no distortion).

There should be some additional contribution to the energy (including the rest mass) and/or the momentum of the whole syste in order that the correct Lorentz transformation property is satisfied. A simple solution to this problem can be obtained by introducing a scalar type volume energy a la MIT bag model [1]. It is assumed here that the system has a definite volume. Let M_s be the contribution to the rest mass from the volume energy. The the total rest mass is $M_c + M_s$ while the volume energy in the boosted frame is $M_s/\cosh Y$ because of Lorentz contraction. There is no additional contribution to the longitudinal momentum of th system in the boosted frame because the scalar type interaction does not carry momentum. The total energy and the longitudinal momentum of the system in the boosted frame are then given by

$$E = E_c + M_s/\cosh Y,$$

$$p_L = p_{cL}. \tag{3.5}$$

On the other hand, Lorentz covariance requires that

$$E = (M_c + M_s) \cosh Y, \tag{3.6a}$$

$$p_L = (M_c + M_s) \sinh Y. \tag{3.6b}$$

Eqs.(3.2),(3.5) and (3.6a) yield

$$M_s = 2I. \tag{3.7}$$

Equation (3.6b) is then automatically satisfied. This is the least modification to the energy-momentum of the system in order to achieve a correct Lorentz transformation property. Eqs.(3.1), (3.4) and (3.7) give an inequality

$$M_c - M_s = \int_{-\infty}^{\infty} dy \int d^2\vec{p}_T m_T \frac{D_0(y,\vec{p}_T)}{\cosh y} > 0. \tag{3.8}$$

4. Energy-momentum tensor of a relativistic gas

Consider a case where a composite system in c.m. system is a gas contained in a box at rest. We will first calculate the pressure. The proper energy density due to constituents is given by

$$\varepsilon = M_c/V_r, \tag{4.1}$$

where M_c is given by (3.1) and V_r is the volume of the box. The density of constituent particles with rapidity between y and y + dy and transverse momentum between $\vec{p}_T$ and $\vec{p}_T + d^2\vec{p}_T$ is $D_0(y,\vec{p}_T)$ $dyd^2\vec{p}_T/V_r$. The number of such particles that collide with a unit area of the surface S per unit time is $\tanh y\, D_0(y,\vec{p}_T)\, dyd^2\vec{p}_T\, /V_r$ for $y > 0$. See Fig.3 for the definitions of the surface S and the coordinate axes. The transferred momentum per collision is

Fig.3

$2m_T \sinh y$. The pressure at the surface S is then given by

$$P_l = \frac{2}{V_r} \int_{-\infty}^{\infty} dy \int d^2\vec{p}_T m_T \sinh y \tanh y\, D_0(y,\vec{p}_T)$$

$$= M_s/V_r. \tag{4.2}$$

The contributions from the constituents to the energy and the longitudinal momentum of the system in the boosted frame with boost rapidity Y are evaluated using (3.2),(3.3),(4.1) and (4.2):

$$E_c = M_c \cosh Y + P_l V_r \frac{\sinh^2 Y}{\cosh Y},$$

$$p_{cL} = (M_c + P_l V_r)\sinh Y .$$

As the volume of the system is $V_r/\cosh Y$ in the boosted frame, the energy density T^{00} and the longitudinal momentum density T^{10} are, respectively, given by

$$T^{00} = E_c/(V_r/\cosh Y)$$

$$= \frac{\varepsilon + V^2 P_l}{1 - V^2}, \tag{4.3}$$

$$T^{10} = p_{CL}/(V_r/\cosh Y)$$

$$= \frac{V(\varepsilon + P_1)}{1 - V^2}, \qquad (4.4)$$

where $V = \tanh Y$. As $m_T \cosh y \tanh y = m_T \sinh y$, one can easily show that $T^{01} = T^{10}$, where T^{01} is the x-component of the energy current.

The 11 component of the energy-momentum tensor corresponds to the x-component of current of x-component of momentum. It is given as

$$T^{11} = (V_r/\cosh Y)^{-1} \int_{-\infty}^{\infty} dy \int d^2\vec{p}_T m_T \sinh y \tanh y \, D_Y(y,\vec{p}_T)$$

$$= V_r^{-1} \int_{-\infty}^{\infty} dy \int d^2\vec{p}_T \frac{m_T \sinh^2(y+Y)}{\cosh y} D_0(y,\vec{p}_T)$$

$$= \frac{V^2\varepsilon + P_1}{1 - V^2} . \qquad (4.5)$$

Now let $\vec{p} = (p_x, p_y, p_z)$ and $\vec{v} = (v_x, v_y, v_z)$ be the momentum and the velocity of a constituent particle. As $\vec{p}_T^{\,2} = p_y^2 + p_z^2$ and $v_y = p_y/m_T \cosh y$, one has

$$T^{22} = (V_r/\cosh Y)^{-1} \int_{-\infty}^{\infty} dy \int d^2\vec{p}_T p_y v_y D_Y(y,\vec{p}_T)$$

$$= V_r^{-1} \int_{-\infty}^{\infty} dy \int d^2\vec{p}_T p_y v_y D_0(y,\vec{p}_T)$$

$$= P_2, \qquad (4.6a)$$

and similarly,

$$T^{33} = P_3, \qquad (4.6b)$$

where P_2 (P_3) is the pressure for a plane perpendicular to the y- (z-) axis. Finally, it is easily proven that

$$T^{ij} = 0 \quad \text{for} \quad i,j = 1,2,3 \quad \text{with} \quad i \neq j, \qquad (4.7)$$

provided $D_Y(y,\vec{p}_T)$ is invariant under the rotation around the x-axis. Of course, one has $P_1 = P_2 = P_3$ when the momentum distribution of the constituents in the c.m.s. is isotropic. All those results (4.3) ~ (4.7) coincide with the well-known expression for the energy-momentum tensor of a relativistic gas [2].

5. Invariant mass of the system and a virial theorem

In this section, we assume that the invariant momentum distribution of constituents in the c.m. system is isotropic;

$$E \frac{dN}{d^3\vec{p}} = f(\vec{p}^2). \tag{5.1}$$

One then has

$$D_0(y,\vec{p}_T) = f(\vec{p}^2)$$

$$= f(m_T^2\cosh^2 y - m^2). \tag{5.2}$$

From (3.1) and (5.2), one has

$$M_c = \int_{-\infty}^{\infty} dy \int d^2\vec{p}_T \; m_T \cosh y \; f(m_T^2\cosh^2 y - m^2)$$

$$= 2\pi \int_{-\infty}^{\infty} dy \int_m^{\infty} dm_T m_T^2 \cosh y \; f(m_T^2\cosh^2 y - m^2)$$

$$= 2\pi \int_0^{\infty} ds\sqrt{m^2 + s} \;\; f(s) \int_0^{h(s)} dy \; (\cosh y)^{-2}, \tag{5.3}$$

where

$$h(s) = \cosh^{-1}(\sqrt{m^2 + s}\,/m), \tag{5.4}$$

and use was made of an identity

$$f(m_T^2\cosh^2 y - m^2) = \int_{-\infty}^{\infty} ds \; f(s) \; \delta(m_T^2\cosh^2 y - m^2 - s).$$

In a similar way, (3.4),(3.7) and (5.2) yield

$$M_s = 2\pi\int_0^{\infty} ds \; \sqrt{m^2 + s} \; f(s) \int_0^{h(s)} dy \; (\sinh y)^2 (\cosh y)^{-4} \tag{5.5}$$

Equations (5.3) and (5.5) give

$$M_c - M_s = 2\pi\int_0^{\infty} ds \; \sqrt{m^2 + s} \; f(s) \int_0^{h(s)} dy \; (\cosh y)^{-4} > 0. \tag{5.6}$$

Since $h(s) \to \infty$ as $m \to 0$ for $s > 0$ and

$$\int_0^{\infty} dy \; (\cosh y)^{-2} = 1, \qquad \int_0^{\infty} dy \; (\sinh y)^2 (\cosh y)^{-4} = 1/3,$$

one obtains a virial theorem a la bag model

$$M_c/M_s = 3 \tag{5.7}$$

in the massless limit $m \to 0$.

In a one-dimensional case where there is no transverse degree of freedom, the single particle inclusive distribution of constituents is completely specified by the rapidity distribution $g(y)$. The constribution to the invariant mass of the system from the

constituents and that from the scalar type interaction turn out to be

$$M_c = mG_1, \tag{5.8a}$$

$$M_s = mG_2, \tag{5.8b}$$

where

$$G_1 = \int_{-\infty}^{\infty} dy \cosh y \; g(y), \tag{5.9a}$$

$$G_2 = \int_{-\infty}^{\infty} dy \frac{\sinh^2 y}{\cosh y} \; g(y). \tag{5.9b}$$

In order that M_c stays finite as m approaches zero, g(y) should have an appropriate m-dependence so that G_1 grows like m^{-1} as m goes to zero. Such a divergent behavior of G_1 can only come from the integration region where |y| is very large. As the leading behaviors of coshy and $\sinh^2 y/\cosh y$ are the same for large |y|, it is obvious that $G_1/G_2 \to 1$ as $m \to 0$. One thus has

$$M_c/M_s = 1, \tag{5.10}$$

in the limit $m \to 0$.

6. Yo-yo mode of the flux tube

The energy-momentum of the composite systems discussed in the preceding sections consists of two parts: one due to the constituents and another to the scalar type interaction. In general, a system may have a more complicated structure because any Lorentz 4-vector can be added to the original energy-momentum 4-vector without destroying the correct Lorentz transformation property. A typical but rather complicated example is provided by the yo-yo mode [3-6] of the bagged flux tube with a quark and an antiquark attached at the ends [7-10].

The structure of the flux tube can be determined by requiring that its Lorentz transformation property should be the same as that of a string in the zero radius limit. The string has the following crucial properties. An infinitesimal segment of string of length $d\ell$ carries energy and momentum

$$dE = \kappa d\ell, \tag{6.1a}$$

$$d\vec{p} = \kappa d\ell \vec{v}_T / \sqrt{1 - \vec{v}_T^{\,2}}, \tag{6.1b}$$

in any frame. Here, κ is the string constant and $\vec{v}_T$ is the velocity vector which is perpendicular to the string direction. Such an object can be realized as the zero radius limit of a color flux tube in the following way [10].

Consider in the c.m. frame a non-rotating tube with radius R and the maximum length L with disk-shaped massless quark(q) and

antiquark ($\bar{q}$) attached at both ends. It is assumed here that the vacuum inside the tube is perturbative while the one outside the tube is of nonperturbative nature such that the dielectric constant is vanishing there. A uniform color electric flux tube is formed between q and $\bar{q}$, while there is no magnetic field anywhere in c.m.s. If the tube is placed such that its axis lies in the x-y plane, each component of the color electric field inside the tube is given by

$$\vec{E} = (E_x, E_y, E_z) = (E\cos\theta, E\sin\theta, 0), \tag{6.2}$$

where θ is the angle between the x-axis and the tube axis, and the color indices are suppressed. The situation is depicted in Fig.4. In the bag version of the flux tube picture, there is the following relation between the bag constant B and the field strength to realize the pressure balance at the boundary of the tube [7]:

$$B = \varepsilon E^2/2. \tag{6.3}$$

As $\vec{v}_T = 0$ in the present case, the string constant is equal to the string tension and hence to the total energy of the flux tube per unit length. It is given by

$$\kappa = \pi R^2 (\frac{1}{2} \varepsilon E^2 + B) = \pi R^2 \varepsilon E^2. \tag{6.4}$$

Fig.4

The quark and the antiquark at both ends of the tube perform the yo-yo motion with light velocity and the period 2L. If the x-axis is chosen as the longitudinal axis, the longitudinal rapidities of q and $\bar{q}$ turn out to be

$$\pm y_0 = \tanh^{-1}(\pm\cos\theta) = \mp \ln\tan\frac{\theta}{2}, \tag{6.5}$$

while the momenta of q and $\bar{q}$ change linearly in time between $-\kappa L/2$ and $+\kappa L/2$ within a half period. The time-averaged rapidity-p_T distribution of the constituents (q and $\bar{q}$ in this case) is

$$D_0(y, \vec{p}_T) = \theta(p_T)\theta(\tfrac{1}{2}\kappa L\sin\theta - p_T) \{ \delta(y - y_0) + \delta(y + y_0) \}$$

$$\times 1/(\pi p_T \kappa L\sin\theta), \tag{6.6}$$

where $p_T = |\vec{p}_T|$ and $\theta(x)$ is the step function.

If the system is boosted along the x-direction by rapidity $Y = \tanh^{-1}V$, the electric and the magnetic fields $\vec{E}'$ and $\vec{B}'$ inside the Lorentz contracted tube become

$$\vec{E}' = (E\cos\theta, E\sin\theta\cosh Y, 0), \tag{6.7}$$

$$\vec{B}' = (0,0,E\sin\theta\sinh Y). \tag{6.8}$$

The energy and momentum densities due to those fields are, respectively, given by

$$\rho' = \frac{1}{2}\varepsilon(\ \vec{E}'^2 + \vec{B}'^2\ )$$

$$= \frac{1}{2}\varepsilon E^2(\ \cos^2\theta + \cosh 2Y\ \sin^2\theta\ ) \tag{6.9}$$

and the Poynting's vector

$$\vec{S}' = (\ \varepsilon E^2\sin^2\theta\ \cosh Y\ \sinh Y,\ -\varepsilon E^2\sin\theta\ \cos\theta\ \sinh Y,\ 0\ ). \tag{6.10}$$

The angle between the flux tube and the x-axis is

$$\theta' = \tan^{-1}(\ \cosh Y\ \tan\theta\ ). \tag{6.11}$$

The y-$\vec{p}_T$ distribution of q and $\bar{q}$ is given by (2.9) with (6.6):

$$D_Y(y,\vec{p}_T) = \Delta(y,Y)D_0(y-Y,\vec{p}_T)$$

$$= \frac{\theta(p_T)\theta(\frac{1}{2}\kappa L\sin\theta - p_T)}{\pi p_T \kappa L\sin\theta\cosh Y\cosh y_0}$$

$$\times\ \{\cosh(Y+y_0)\delta(y-y_0-Y)+\cosh(Y-y_0)\delta(y+y_0-Y)\}. \tag{6.12}$$

Now the contributions to the invariant mass M and the total energy-momentum of the system in the boosted frame from the constituents (C), fields(F) and the "bag constant" (B) can be determined by some straightforward calculations and the result is summarized in Table 1. The contributions from C,F,B to M are in the ratio 2:1:1. The most peculiar point is that the

Tables 1 and 2

contributions to $\langle P'_y\rangle$ (the y-component of the momentum) from C and F cancel each other. On the other hand, the contribution to the energy $\langle\Omega'\rangle$ and $\langle P'_x\rangle$ (the x-component of the momentum) from C is just what is predicted by (3.2) and (3.3) with

$$I = M_s = \frac{1}{2}\kappa L\cos^2\theta. \tag{6.13}$$

While the contribution from B possesses a property characteristic of a scalar-type interaction, the F part shows a hybrid nature, the scalar (SF) and the vector (VF) as long as $\langle\Omega'\rangle$ and $\langle P'_x\rangle$ are concerned. Furthermore, it has an additional contribution called XF to $\langle P'_y\rangle$. In the present case, it is remarkable that the scalar type volume energy consists of two parts SF and B. Shown in Table 2 are the decomposition of the F-part into three parts SF,VF,XF as well as the sum of the SF and the B parts. Dependence of various components on θ is also remarkable. For example, M_s (sum of the SF and the B parts in M) depends on θ (see (6.13)), both the F and B parts in M are independent of θ while separation of F

part into VF and SF depends on θ. The total sums for M, $\langle\Omega'\rangle$, $\langle P'_x\rangle$ and $\langle P'_y\rangle$ are of course independent of θ and satisfies a correct energy-momentum relation

$$\langle\Omega'\rangle^2 - \langle P'_x\rangle^2 - \langle P'_y\rangle^2 = M^2. \tag{6.14}$$

7. Conclusions and discussions

In the present paper, we have considered relativistic composite systems with finite extension within a classical (non-quantum mechanical) picture. The key result (2.9) is obtained from the fact that, in an isolated composite system, a constituent particle is confined in a spatial region of finite volume. The result claims that the rapidity distribution of the constituents in a boosted frame is not just a translated c.m. rapidity distribution but is a translated one multiplied by a distortion factor $\Delta(Y,y)$. This result is to be compared with the case where a system is made of completely free particles. In such a case, the rapidity distributions in different frames are transformed to each other by simple translation. It is essential that such a system cannot form a stable system with finite spatial extension. Conversely speaking, existence of particles confined in a finite region of space means existence of an interaction. A minimal way of making a composite system consistent with Lorentz transformation is to add a scalar-type interaction term as shown in section 3. In such a minimal case, the invariant mass of the whole system consists of two parts, the constituent (C) part and the scalar type interaction (S) part;

$$M = M_c + M_s. \tag{7.1}$$

In a relativistic gas confined in a "box" with vanishing energy-momentum, the proper energy density corresponds to the C part while the pressure to the S part as demonstrated in section 4. This means that the enthalpy density $\varepsilon + P$ corresponds to the invariant mass density.

A remarkable but peculiar result is obtained in the case where a constituent is massless. That is, we obtain in section 5 a virial theorem $M_c:M_s = 3:1$ (or 1:1) for the 3- (or 1-) dimensional case. Usually, one has the same result by assuming that the energy (=mass) of a system in its c.m.s. is expressed as

$$E = \frac{a}{R} + bR^d \tag{7.2}$$

and by minimizing E for variation of R, where d is the dimension of the space in which the system is embedded. Note that the first term on the r.h.s. is due to quantum fluctuation (ground state kinetic energy of massless particles) while the second term is the volume energy term. It is therefore very peculiar that the same virial theorem is obtained within a purely classical (non-quantum mechanical) framework. This result may be an indication for an unknown deep connection between special relativity and quantum mechanics. Anyway, our result is most reliably applicable to a relativistic composite system of macroscopic size. It should be used carefully when a system is so small that quantum effects may be important.

As illustrated in section 6, an instructive example of a fully relativistic composite system is provided by a flux tube with a quark and an antiquark at the ends performing a yo-yo motion. It should be noted that a stationary flux tube with constant length is relativistically "incomplete", that is, the energy-momentum of such a system does not have a correct Lorentz transformation property. An open flux, i.e., a flux with ends has to be associated with source particles that emit or absorb fluxes. In general, our result suggests that full consistency of a composite system with Lorentz transformation implies a very stringent condition on the nature of the interactions which are responsible for forming the composite system. Presumably, such a consistency may hold automatically in a bound state problem of covariant quantum field theory if the problem is solved exactly. Nevertheless, our result will be useful in various practical cases such as phenomenological models of hadrons, relativistic effects in nuclei, approximate methods of solving a relativistic bound state problem or constructing a relativistic wave function for a composite system, relativistic hydrodynamics and so on.

Acknowledgement

The author would like to thank M.Maruyama, K.Saito and A.Kokubo for useful discussions.

References

1) A.Chodos,R.L.Jaffe,K.Johnson,C.B.Thorn and V.F.Weisskopf, Phys. Rev.D9(1974)3471.

2) See, for example, L.Landau and E.Lifshitz, The Classical Theory of Fields, transl. by M.Hamermesh, 1951, Addison-Wesley: L.D.Landau and E.M.Lifshitz, Fluid Mechanics, transl. by J.B.Sykes and W.H.Reid, 1959, Pergamon Press.

3) X.Artru and G.Mennessier, Nucl.Phys.B70(1974)93.

4) A.Patrascioiu, Nucl.Phys.B81(1974)525.

5) W.A.Bardeen,I.Bars,A.J.Hanson and R.D.Peccei, Phys.Rev. D13 (1976)2364.

6) B.Andersson,G.Gustafson and C.Peterson, Z.Phys.C1(1979)105.

7) K.Johnson and C.B.Thorn, Phys.Rev.D13(1976)1934.

8) P.Hasenfratz and J.Kuti, Phys.Rep.40(1978)75.

9) M.Iwasaki and K.Wakimaru, Phys.Lett.B237(1990)102: M.Iwasaki, N.Tanokami and T.Nakai, Phys.Lett.B314(1993)391.

10) A.Kokubo, M.Maruyama and F.Takagi, "Hadron Structure Function in the Flux Tube Model", contributed paper to 14th Int. Conf. on Few Body Problems in Physics, Virginia, May 26-31,1994.

Table 1. Contributions from constituents(C), fields(F) and bag constant(B) to the rest mass, energy and momenta of the flux tube

	C	F	B	sum
M	$\frac{1}{2}\kappa L$	$\frac{1}{4}\kappa L$	$\frac{1}{4}\kappa L$	κL
$\langle\Omega'\rangle$	$\frac{1}{2}\kappa L\cosh y(1+v^2\cos^2\theta)$	$\frac{1}{4}\kappa L\cosh y(1+v^2-2v^2\cos^2\theta)$	$\frac{\kappa L}{4\cosh y}$	$\kappa L\cosh y$
$\langle P'_x\rangle$	$\frac{1}{2}\kappa L\sinh y(1+\cos^2\theta)$	$\frac{1}{2}\kappa L\sinh y\sin^2\theta$	0	$\kappa L\sinh y$
$\langle P'_y\rangle$	$\frac{1}{2}\kappa L\tanh y\sin\theta\cos\theta$	$-\frac{1}{2}\kappa L\tanh y\sin\theta\cos\theta$	0	0

Table 2. Decomposition of the F part into vector(VF) part, scalar (SF) part and the third(XF) part. Sum of SF and B parts is shown also.

	VF	SF	XF	SF + B
M	$\frac{1}{2}\kappa L\sin^2\theta$	$\frac{1}{4}\kappa L(1-2\sin^2\theta)$	0	$\frac{1}{2}\kappa L\cos^2\theta$
$\langle\Omega'\rangle$	$\frac{1}{2}\kappa L\cosh y\sin^2\theta$	$\frac{\kappa L(1-2\sin^2\theta)}{4\cosh y}$	0	$\frac{\kappa L\cos^2\theta}{2\cosh y}$
$\langle P'_x\rangle$	$\frac{1}{2}\kappa L\sinh y\sin^2\theta$	0	0	0
$\langle P'_y\rangle$	0	0	$-\frac{1}{2}\kappa L\tanh y\sin\theta\cos\theta$	0

Figure captions

Fig.1. The distortion factor for various Y

Fig.2. Comparison of the distorted as well as the merely translated distributions with the original distribution before the boost

Fig.3. A box with the surface S which is perpendicular to the boost axis x.

Fig.4. Color flux tube formed between a disk-shaped quark and an antiquark with opposite color charges.

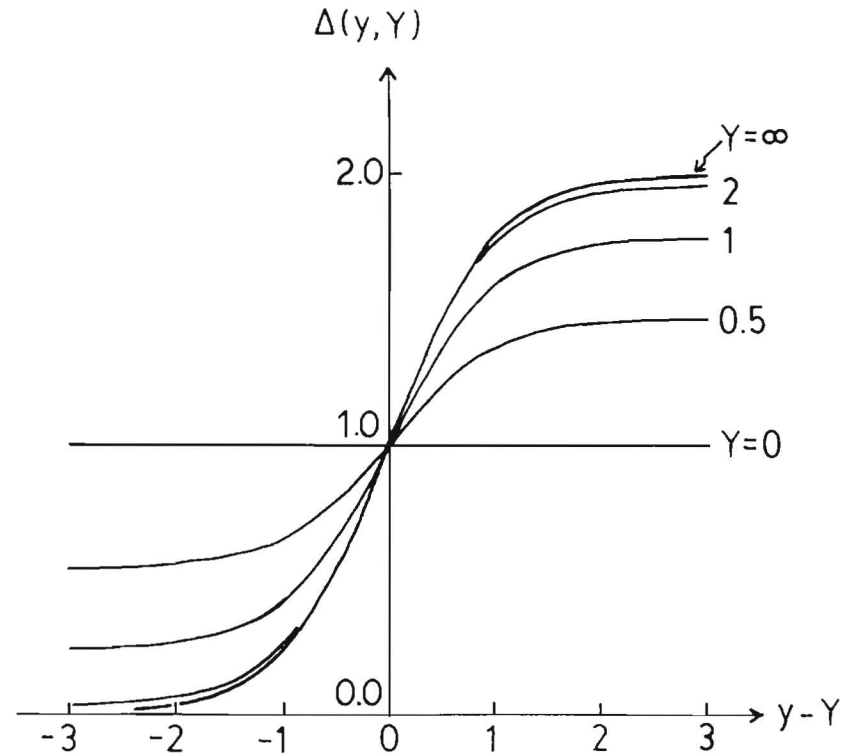

Fig.1

Fig. 3

Fig. 2

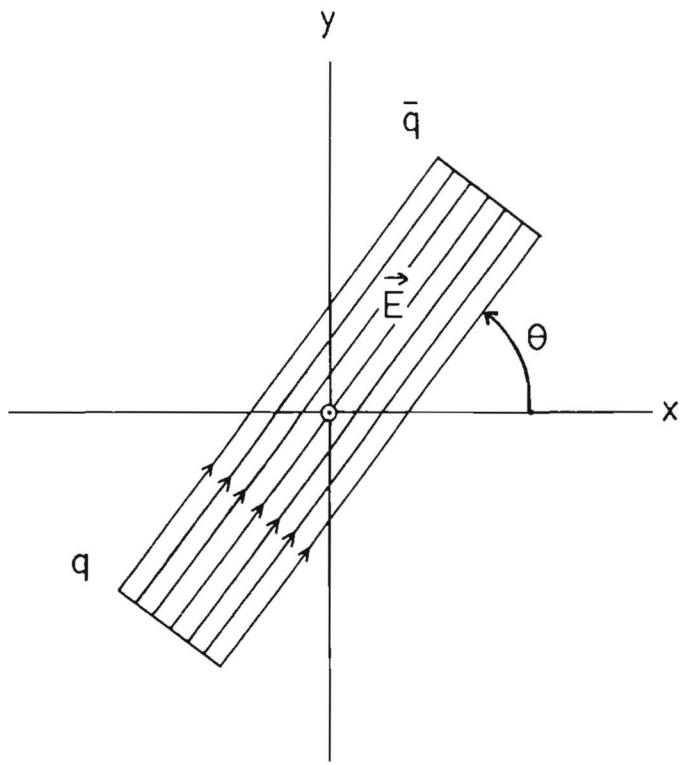

Fig. 4