Paper presented at the International Symposium on High Energy Spin Physics and Polarization Phenomena in Nuclear Physics, Bloomington, Sept. 15 22

TRI PP 94 100
Nov 1994

Fermilab Library
0 1160 0072926 3

TRI-PP-94-100
6

Measuring the Muon Polarization in $K^+ \to \pi^0\mu^+\nu$ with the E246 detector at KEK

FERMILAB
MAR
LIBRA

P. Gumplinger *

TRIUMF, Vancouver, B.C., Canada V6T 2A3

Abstract

In the decay, $K^+ \to \pi^0\mu^+\nu$, a value for the T-violating triple correlation $P_T \equiv \vec{s}_{\mu^+} \cdot (\vec{p}_{\mu^+} \times \vec{p}_{\pi^0}) / |\vec{p}_{\mu^+} \times \vec{p}_{\pi^0}|$, of order 10^{-3}, would signal new physics beyond the standard model. An experimental search at this level will be carried out at KEK. It is essential to be able to detect such a small T-odd transverse component of the muon polarization in the presence of a dominant T-even component in the plane defined by the muon and pion momenta, and also to eliminate any systematic errors associated with the apparatus.

1 Introduction

The transverse muon polarization (P_T) in the decay, $K^+ \to \pi^0\mu^+\nu$ ($K^+_{\mu 3}$) [1], is that component of the muon polarization which is normal to the plane defined by the three decay particle momenta. The expression for P_T

$$P_T \equiv \frac{\vec{s}_{\mu^+} \cdot (\vec{p}_{\mu^+} \times \vec{p}_{\pi^0})}{|\vec{p}_{\mu^+} \times \vec{p}_{\pi^0}|}, \tag{1}$$

is a triple correlation which changes sign under the time-reversal operation. Consequently, a measured non-zero value of P_T would signal T-violation.

To the extent that the CPT theorem is valid, T-violation must exist at the same level as CP-violation. However, we do not have to invoke CPT-invariance to argue that there is enough experimental evidence for T-violation. It can be shown that under very general assumptions, the scalar product

$$\zeta \equiv < K^0_S \mid K^0_L > = \mid \zeta \mid e^{i\Phi_\zeta} \simeq \frac{\Gamma_S(\pi^+\pi^-)\eta_{+-} + \Gamma_S(\pi^0\pi^0)\eta_{00} + \cdots}{\frac{1}{2}(\Gamma_L + \Gamma_S) + i(m_L - m_S)} \tag{2}$$

must be real if CPT holds, independent of T-invariance; and it must be purely imaginary if T holds, independent of CPT-invariance [2]. The measured phases ($\Phi_{+-} \simeq \Phi_{00} \simeq 45°$) of the CP-violating parameters η_{+-} and η_{00} in the decay of the neutral kaon into two pions

$$\eta_{2\pi} \equiv \frac{< 2\pi \mid H_{wk} \mid K^0_L >}{< 2\pi \mid H_{wk} \mid K^0_S >} \tag{3}$$

and the remarkable fact that $\Delta m = (m_L - m_S) \simeq \frac{1}{2}\Gamma_S \gg \frac{1}{2}\Gamma_L$, where m and Γ are the mass and the decay-width of the kaons, lead to $\Phi_\zeta \simeq 0°$ and give further evidence for CPT-invariance as opposed to T-invariance.

Among various models proposed to explain observed CP-violation phenomena in K^0 decay, the most appealing is the standard model with an imaginary phase in the Cabbibo-Kobayashi-Maskawa (CKM) matrix elements. Although two experiments were carried out at FNAL and CERN to verify the non-zero CKM phase, no definite statement about the model can be drawn from their results. Furthermore, it is speculated that this standard model CP violation may not be large enough to explain the other observed CP violating phenomenon, the baryon asymmetry in the universe (BAU). It is therefore worthwhile to undertake a search for other sources of CP violation.

The measurement of P_T in $K^+_{\mu 3}$ decay has two striking virtues as a background-free search for new CP violation mechanisms. First, the fake T-odd effect that could be introduced by final-state electromagnetic interactions (FSI) has been calculated to be negligibly small, $O(10^{-6})$, since only one charged particle exists in the final state [3]. Second, P_T in $K^+_{\mu 3}$ decay has no contributions from the CKM phase in the minimal standard model at the tree level, and higher-order contributions are negligibly small. This implies that the observation of a non-zero P_T value would be a definite signature of physics beyond the standard model. Also, there have been general discussions [4,5] that neither an effective vector (V) nor an axial-vector (A) interaction (such as in the minimal standard model and the left-right symmetric model) introduce P_T, but that only a scalar (S) or a psuedoscalar (P) interaction gives a non-zero P_T. Therefore, P_T can be regarded as being one of the best observables to examine the extended Higgs sector and the scalar leptoquark model.

P_T is related to the two structure form factors in the $K^+_{\mu 3}$ hadronic current, $f_+(q^2)$ and $f_-(q^2)$. T-invariance places a constraint that the relative phases

*representing the KEK-PS E246 collaboration - Japan, Russia, Korea, Canada, USA

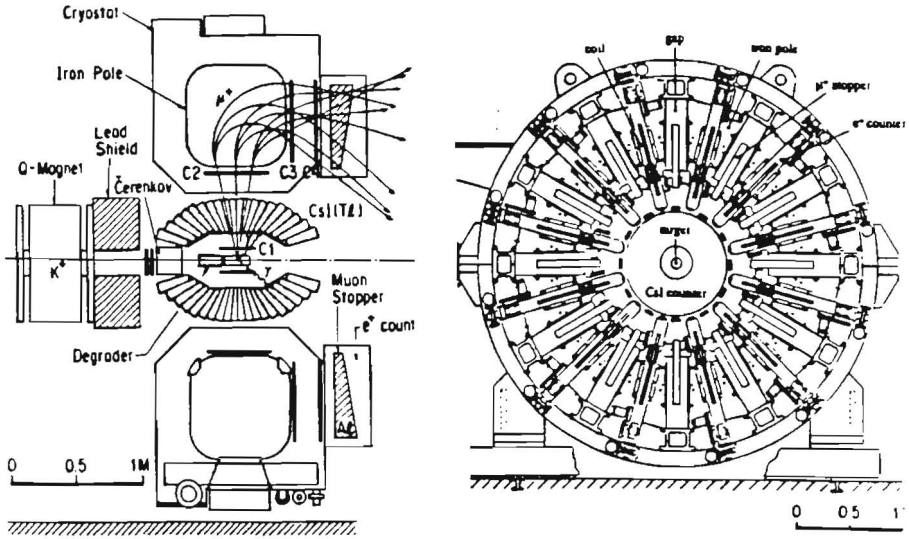

Figure 1: Schematic side and end views of the E246 detector

of f_+ and f_- are the same (or opposite); in other words, the parameter $\xi(q^2) = f_-(q^2)/f_+(q^2)$ should be a real number [2]. P_T is given by [6]

$$P_T \cong \mathrm{Im}\xi \left(\frac{m_\mu}{m_K}\right) \frac{|\vec{p}_\mu|}{[E_\mu + |\vec{p}_\mu|\vec{n}_\mu \cdot \vec{n}_\nu - m_\mu^2/m_K]} \tag{4}$$

2 KEK E246 Experiment

A new experiment, E246, is being prepared at the KEK 12-GeV proton synchrotron (KEK-PS) to search for P_T in $K^+_{\mu 3}$ decays with high sensitivity. In contrast to previous experiments which used in-flight K^+ decays, K^+ decays at rest will be employed in this experiment, providing several advantages: Foremost, it allows the kinematics of the decay to be precisely determined. This, together with the high degree of symmetry in the detector will reduce systematic errors, as will be described later. In fact, the design of the experiment is motivated by the attempt to cancel all systematic errors in first order.

Schematic side and end views of the E246 detector being constructed are shown in Fig.1. Incident K^+s are slowed down in the degrader and stopped in a target located at the center of the detector. The K^+ stopping target

consists of an array of $\sim$ 200 plastic-scintillating fibers with square cross section. After exiting the target, the muons from K^+ decay enter a spectrometer built around a superconducting toroidal magnet, where their momenta are analyzed. The magnet has 12 identical magnet-gaps with accurate 30° rotational symmetry. Four sets of wire chambers track the muon. One multiwire proportional chamber is placed at the entrance and two at the exit of each of the 12 magnet gaps. The fourth chamber is a cylindrical drift chamber surrounding the target.

The photons from the decay of the π^0s are detected with a highly-segmented photon detector, consisting of 768 thallium-doped CsI crystals. The crystals form an array surrounding the K^+ stopping target, with each element pointing to the target center. The assembly covers 75% of 4π and has a beam hole upstream to allow the K^+s into the target, a similar opening downstream to permit the instrumentation of the inner detector and 12 slits for the μ^+s to enter the magnetic spectrometer. A photon directional resolution of about 3 degrees and a reconstructed π^0 mass resolution of 5 MeV/c^2 are expected based on Monte Carlo calculations.

The μ^+s exiting the spectrometer are stopped in a muon polarimeter installed at the exit of each magnet gap. Counters on either side of the muon stopping region, detect e^+s in $\mu^+ \to e^+\nu\bar{\nu}$ decay ($\tau_\mu = 2.2$ μs). The muon polarization is deduced from the asymmetric distribution of the detected positrons, which are emitted preferentially along the μ^+ spin direction. The direction of P_T is parallel to the fringing magnetic field of the toroidal magnet, which will hold P_T against any disturbances, while precessing the in-plane polarization component.

3 Sensitivity to P_T

The narrow azimuthal acceptance of each magnet gap to muons from the target, when combined with the requirement that the π^0 momentum be colinear with the detector axis, will select $K^+_{\mu 3}$ events whose decay plane is radial. For these events, P_T is directed azimuthally in a *screw-sense* around the detector axis, as shown in Fig.2 but with an opposite sense of rotation for forward and backward going π^0s.

P_T will then manifest itself as a difference in the e^+ counts between the counters located at the clockwise (*cw*) and counter-clockwise (*ccw*) sides of each muon stopper. By summing the *cw*- and *ccw*- counts of all the 12 magnet gaps, P_T is given by

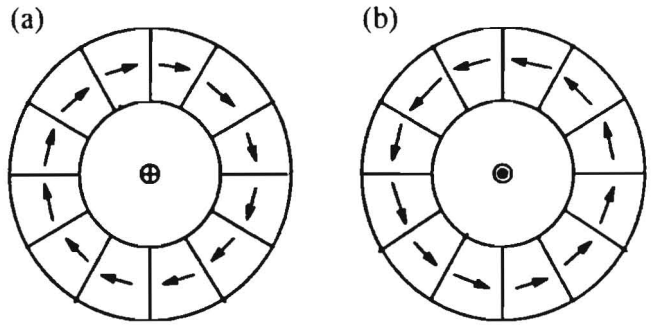

Figure 2: Direction of P_T in a schematic end view of the detector with the 12 sectors. (a) is for $K_{\mu 3}$ events with forward-going π^0s and (b) is for those with backward-going π^0s.

$$\frac{\sum_{i=1}^{12} N_i(cw)}{\sum_{i=1}^{12} N_i(ccw)} \cong 1 \pm 2AP_T, \tag{5}$$

where $N_i(cw)$ and $N_i(ccw)$ are the total number of e^+ counts in the cw- and ccw- counters as seen from the muon stopper in the ith magnet gap and A is the effective analyzing power of the polarization measurement. Since in the toroidal geometry, the same e^+ detector acts as the cw counter in one magnet-gap, as well as the ccw counter in the neighboring magnet-gap, any fake asymmetries resulting from differences in e^+ counter efficiencies thus introduced, would have opposite signs in these two magnet gaps and cancel in first order.

A double ratio can be formed by combining results for the two groups of events, with the π^0 going either forward or backward along the detector axis.

$$\frac{[\sum_{i=1}^{12} N_i(cw)/\sum_{i=1}^{12} N_i(ccw)]_{fwd}}{[\sum_{i=1}^{12} N_i(cw)/\sum_{i=1}^{12} N_i(ccw)]_{bwd}} \cong 1 + 4AP_T. \tag{6}$$

By taking such a double ratio, we can obtain an enhancement factor of two in the asymmetry measurement as well as a remarkable cancelation of spurious asymmetries which may have the same sign for both samples. In addition, by using the $K^+_{\mu 3}$ events with the π^0s moving transverse to the detector axis, we will be able to examine the zero-asymmetry level and to further reduce any spurious asymmetries. For those events, the decay plane is set transverse to the detector axis and the in-plane μ^+ polarization can be measured. Since the amount of in-plane polarization of the cw and ccw directions are equal, a null asymmetry should be detected. This fact can be used to monitor and

correct for any systematics during the data collection time.

To reduce the background from other major decay modes, only those $K^+_{\mu 3}$ events whose μ^+ momentum is above 100 MeV/c and below the $K^+ \to \pi^+\pi^0$ ($K_{\pi 2}$) peak (of 205 MeV/c) will be taken. It covers about 65% of the total $K^+_{\mu 3}$ spectrum. The major background process in this kinematic region comes from in-flight π^+ decays in $K_{\pi 2}$ decay. This can be discriminated by cuts on the angle between μ^+ and π^0 and on the total π^0 energy. It should be noted that most background processes do not introduce any spurious asymmetry, but rather dilute the asymmetric effect of P_T by reducing the effective analysing power.

Using the estimated μ^+ acceptance of 5% in the spectrometer and a reconstructed π^0 acceptance of 20% together with a detection efficiency of $\mu^+ \to e^+\nu\bar{\nu}$ decay of about 20%, the net acceptance of the $K_{\mu 3}$ events is estimated to be 2×10^{-3}. Assuming an average K^+ stopping rate of about 100 k/sec and a 10^7-sec running time, we should obtain a total of 65 M $K^+_{\mu 3}$ events whose decay plane is essentially radial. The statistical error on P_T can be estimated from

$$\Delta P_T \sim \frac{1}{A} \cdot \sqrt{\frac{1}{< \sum_{i=1}^{12} N_i >}}, \tag{7}$$

where A is the analyzing power, which is expected to be about 0.25. From a total of $< \sum_{i=1}^{12} N_i > \sim$ 65 M events, we estimate $\Delta P_T \sim 5 \times 10^{-4}$. Using the average value of $P_T/\mathrm{Im}\xi \sim 0.25$, estimated from Monte Carlo calculations, a sensitivity to $\mathrm{Im}\xi$ of about 2×10^{-3} is expected. Extensive Monte Carlo simulations indicate that remaining higher order systematic errors are small compared to the statistical sensitivity.

References

[1] Sakurai, J.J., Phys. Rev. **109**, 980 (1958)

[2] Lee, T.D., Particle Physics and Introduction to Field Theory, Harwood Academic Publishers, 1981, ch.13, pp 313-314 and ch.14, pp 355-359.

[3] Zhitnitskii, A.R., Sov. J. Nucl. Phys. **31**, 529 (1980)

[4] Leurer, M., Phys. Rev. Lett. **62**, 1967 (1989)

[5] Castoldi, P., Frère, J.-M., and Kane, G.L., Phys. Rev, **D39**, 2633 (1989)

[6] Bélanger, G., and Geng, C.Q., Phys. Rev. **D44**, 2789 (1991)