Fermilab Library
0 1160 0054357 3
TOHOKU-HEP-94-01

TOHOKU-HEP-94-01
TOHOKU-HEP-NOTE-94-01
May 20, 1994

Freon Gas Mixture Dependence of Resistive Plate Counter Performance

A.Yamaguchi, H.Yuta, K.Abe, T. Nagamine, K. Neichi,
H.Kawasaki, O.Watanabe, M.Ishikawa and K.Nanba
Tohoku University

Y.Hoshi, H.Akaishi, H.Takamatsu, and M.Sato
Tohoku-Gakuin University

FERMILAB
DEC 9 1994
LIBRARY

1. Introduction

A resistive plate counter (RPC) has been thought to be one of the most promissing detector of K_L catcher and muon detection for the B-factory at KEK. For the performance test of the RPC built at VPI [1], the gas mixture used to operate the RPC was 30% of isobutance, 68% of argon, and 2% of freon(R13B1). However, R13B1 is prohibited by low to produce any more. Therefore, it is necessary to find another usable freon gas instead of R13B1 in order to obtain desirable performance of the RPC.

We have carried out a series of tests for the freon gas mixture dependence of the RPC by using the VPI test chamber at Tohoku University. For the comparison with R13B1 (CBrF3), we selected other usable freons R14 (CF4), R23 (CHF3), and R116 (C2F6) which are commercially available in future. The RPC performance test was done for the gas mixture of freon content of 1% to 5% and isobutane fixed 30% with the balance argon.

2. Experimental test

The VPI-RPC with a senstive volume of 30cm×30cm×2mm consists of two electrodes, 2mm gas gap and 16 readout strips with 18mm width and 1mm space from one another. The electrodes are the 1mm thick resistive PVC with a volume

resistivity $\sim 10^{10}\Omega\cdot$cm, and are separated by the 2mm thick PVC spacers with the volume resistivity of $\sim 10^{14}\Omega\cdot$cm.

Fig.1 shows (a) the schematic view of the setup of the RPC and two scintillators (A and B), each having $4\times 20\times 0.6$cm^3 and (b) the electronic diagram used for this test. The coincidence of the s was used to select cosmic rays in a 4cm$\times$20cm area of the RPC. This area overlaps with three readout strips as shown in Fig.1(a). Of those 16 readout strip channels, eight channels including the three channels overlaped with the scintillators were connected to the input of LeCroy 2249W ADC (8 channels) and LeCroy 2228A TDC (12 channels). The RPC signal was attenuated by 12dB, discriminated at 30mV and fed into the ADC and TDC modules, respectively.

Figs.2 (a),(b),(c) and (d) show the ADC- vs. TDC-output scatter plot, the ADC and TDC distributions, and the efficiency for each of 8-channels for the standard operation of RPC with the gass mixture of isobutane, 30%, argon, 68%, freon 13B1, 2%, and the electric field of 3.75kV/mm. The ADC and TDC value are the ADC sum of 8-channels and the fastest arrival time to TDC of 8-channels, respectively. The efficiency is calculated as a ratio of the cosmic ray counts to the scintillator coincidence counts for each channel.

Fig.3 shows the peak value of ADC distribution for given freon contents of 0% to 5% as a function of the electric field for freons R13B1, R116, R14 and R23. The error bar gives the width at half-maximum of the ADC-charge distribution. The ADC peak value at the typical operation of freon rate 2% and 3.75kV/mm is $\sim$150pC in this test. The ADC ditribution from no freon contents is broader and higher peak value than the other.

In Fig.4, the time resolution (standard deviation) of the RPC signal vs. electric field is shown for different freons and freon rate(%). No corrections have been made to this plot. The data point includes the time jitters from both the RPC signal and the TDC-start pulse due to the coincidence of two scitillators. The time resolution at the electric field of greater than 3.75kV/mm is $\sim$2ns for most of freon rates.

Fig.5 shows the single rate per unit cm^2 vs. electric field. The single rate was averaged over the whole sensitive surface of eight readout strips. The RPC efficiency defined by the RPC counts per one coincidence count is shown in Fig.6. The efficiencies of higher than 95% are achieved at the electric field of above 3.50kV/mm. The efficiency loss due to the PVC spacer of 6mmϕ is about 1%. The efficiency for each of 8 readout strips channels at 3.50kV/mm and freon rate 0% and 2% is shown in Fig.7. At this case, the ADC-peak values are about 110pC,

100pC, 300pC, 530pC,and 600pC for 2% freons R13B1, R116, R14, R23, and no freons, respectively. The RPC signals become broader spatially for higher charge.

3. Conclusions

We have achieved the RPC performance of enough signal pulse (~200pC), higher time resolution (<2ns), less single rate (<3Hz/cm^2), higher efficiency (>95%), and better spatial resolution with the gas mixture of 30% isobutane, 68% argon, and 2% freon R116 at the electric field of 3.75kV/mm. The reseults from Fig.3 through Fig.7 indicates that the RPC performance test using freon R116 shows the similar behavier to that of R13B1. It is also shown from figures 3, 5, and 7 that a few percent content of freon R13B1 or R116 absorbes electrons from the 'spark' discharge, and reduces the size of the discharge. From this study, we conclude that freon R116 can be used for the RPC as the K_L and muon detector insted of freon R13B1.

References

1. N.Morgan et al., Nucl.Instr.and Meth. A340 (1994) 341.

Figure Captions

Fig.1. Schematic view of (a) the setup of the RPC and scintillators and (b) the electronic diagram of counting system.

Fig.2. ADC and TDC disributions and the efficiency for each of 8 readout strips by the typical RPC operation at the 3.75kV/mm and the gas mixture of 30% isobutane, 68% argon and 2% R13B1.

Fig.3. ADC peak value vs. electric field for the freons of R13B1, R116, R14, and R23.

Fig.4. Time resolution vs. electric field for the freons of R13B1, R116, R14, and R23.

Fig.5. Single rate per unit cm^2 vs. electric field for the freons of R13B1, R116, R14, and R23.

Fig.6. Efficiency vs. electric field for the freons of R13B1, R116, R14, and R23.

Fig.7. Each efficiency of 8 readout strips at the electric field of 3.50kV/mm and the freon rate 2% and 0% for the freons of R13B1, R116, R14, and R23.

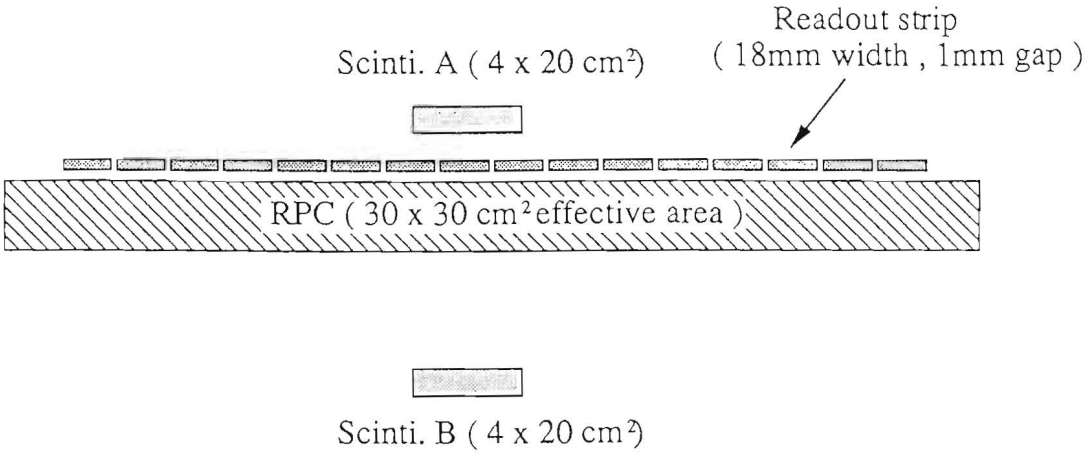

(a) schematic view of the setup

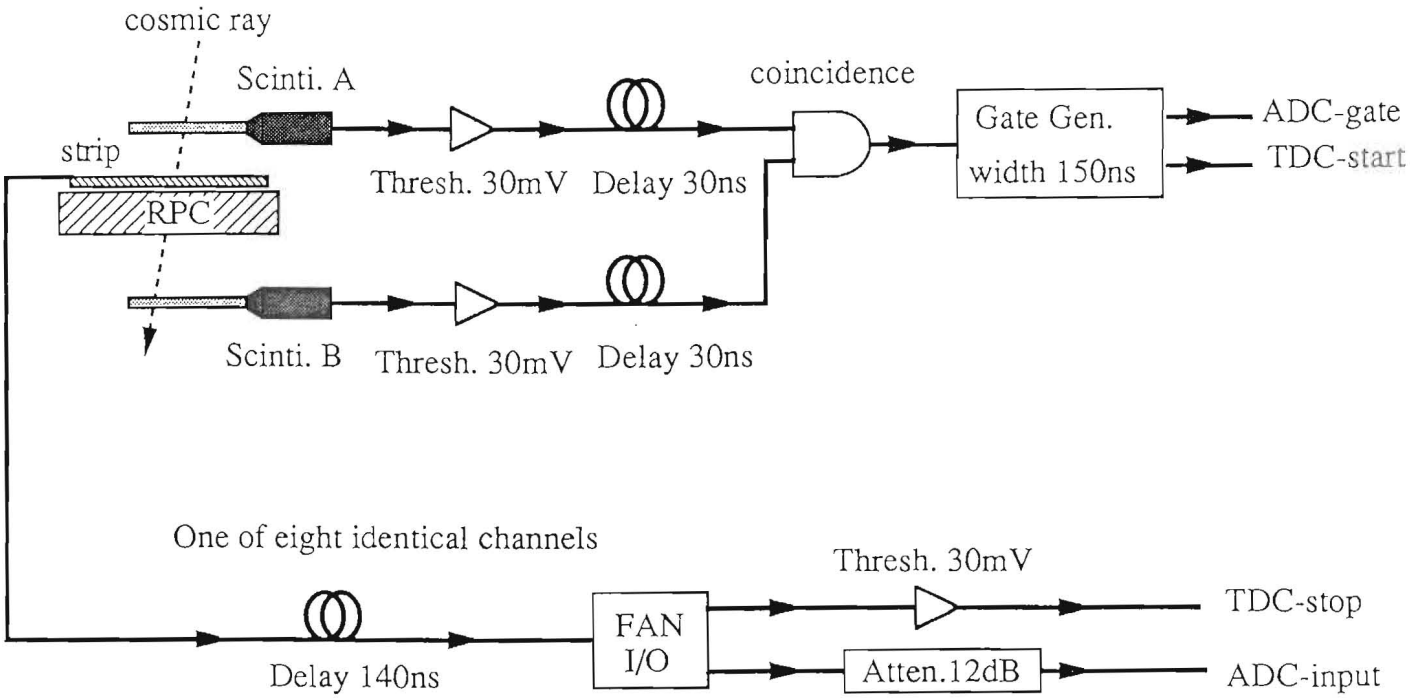

(b) Electronic diagram

Fig. 1

f13b1r2hv375

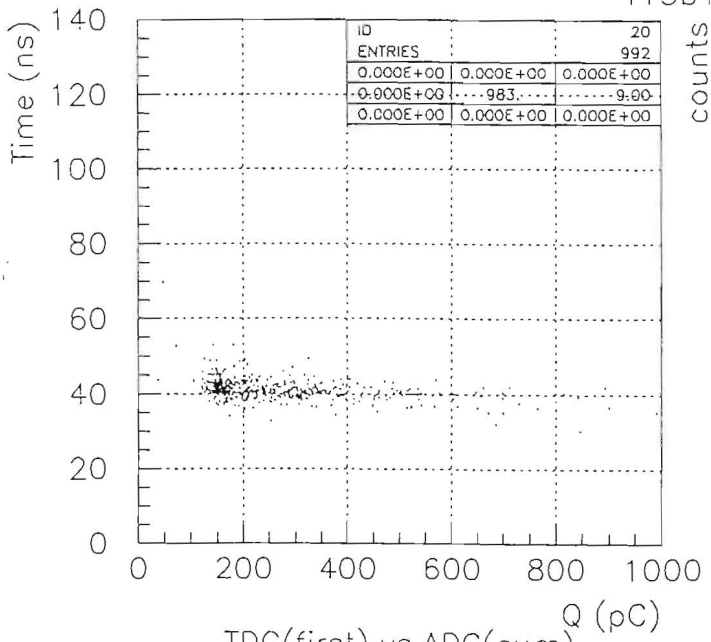

TDC(first) vs ADC(sum)

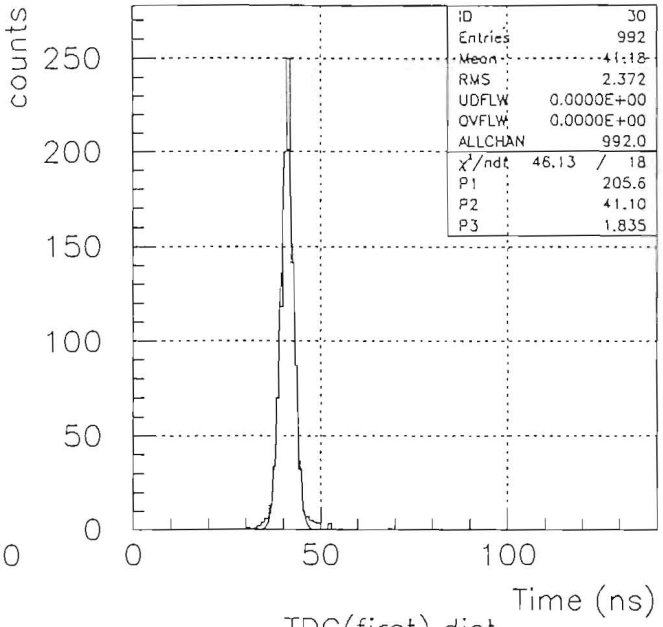

TDC(first) dist.

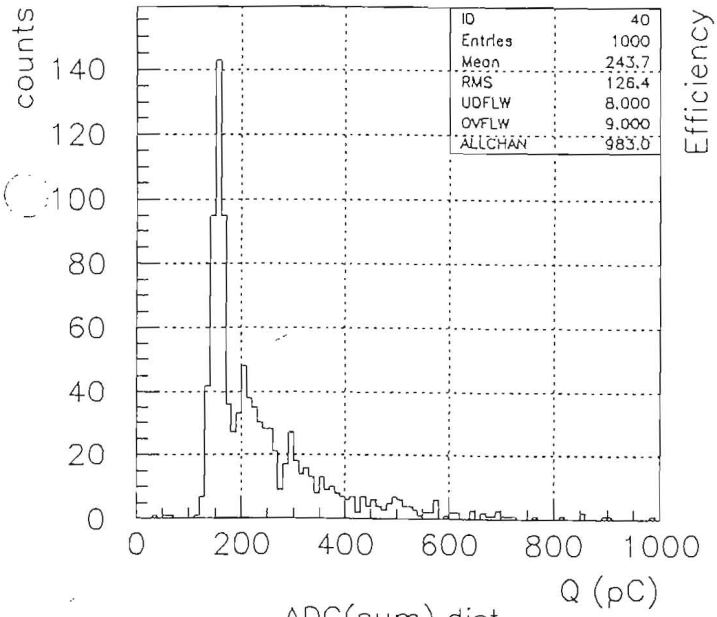

ADC(sum) dist.

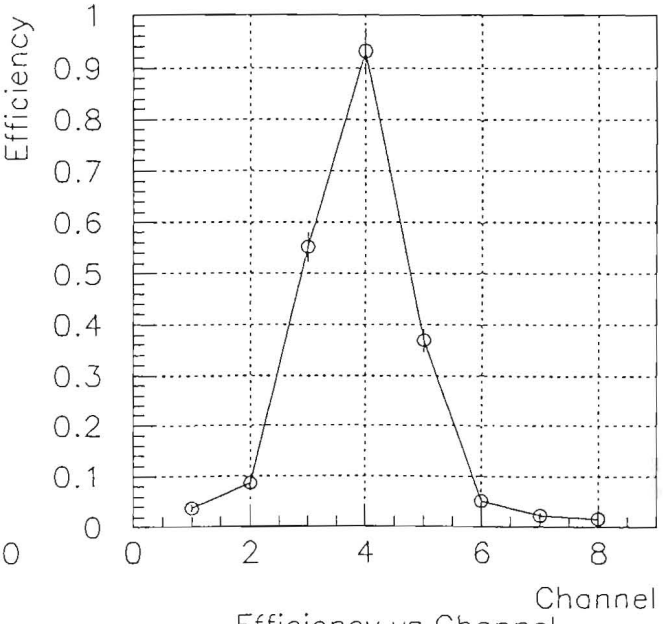

Efficiency vs Channel

94/05/20 13.04

ADC-Peak vs Electric Field

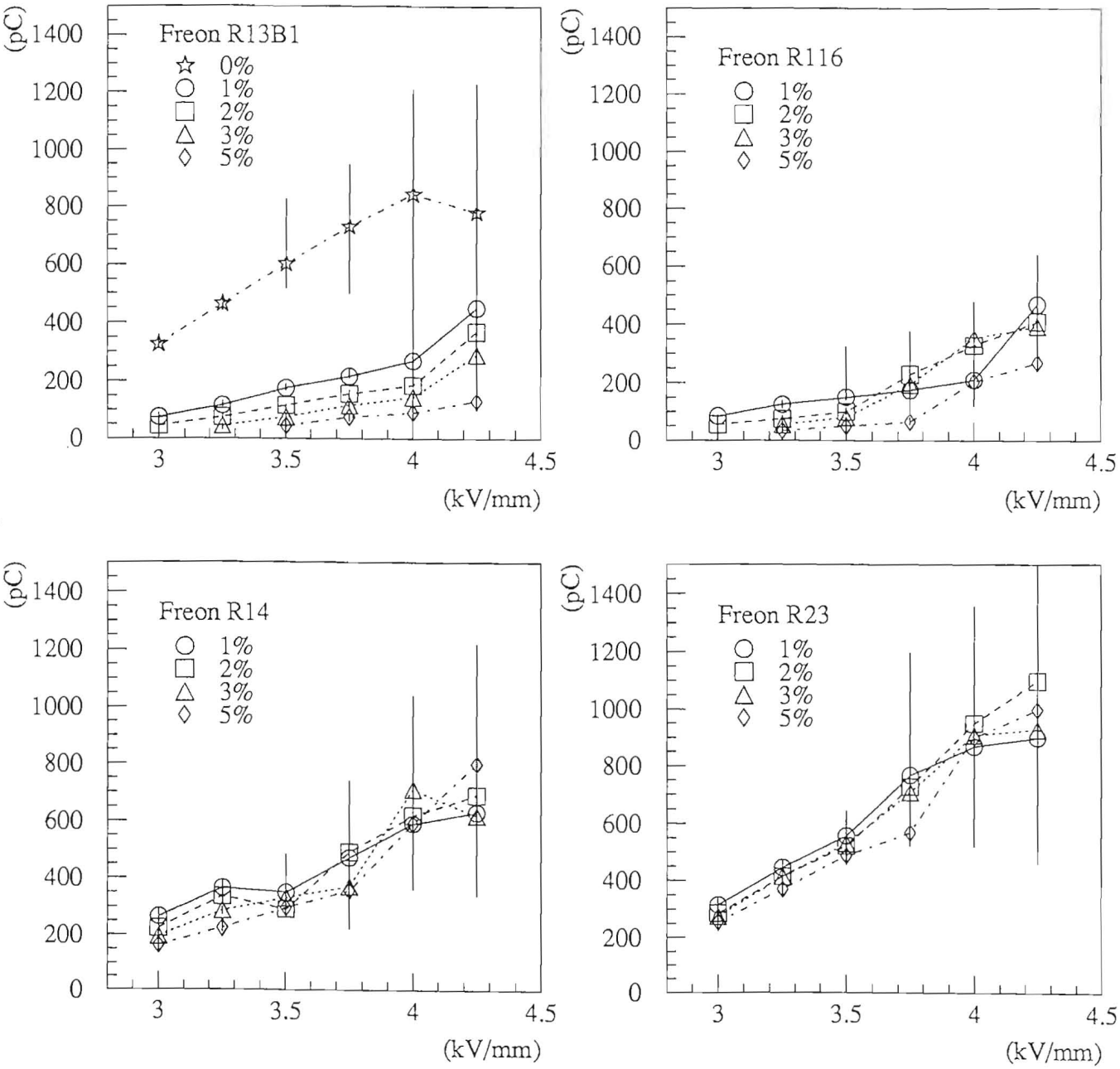

94/05/20 13.07

TDC-sigma vs Electric Field

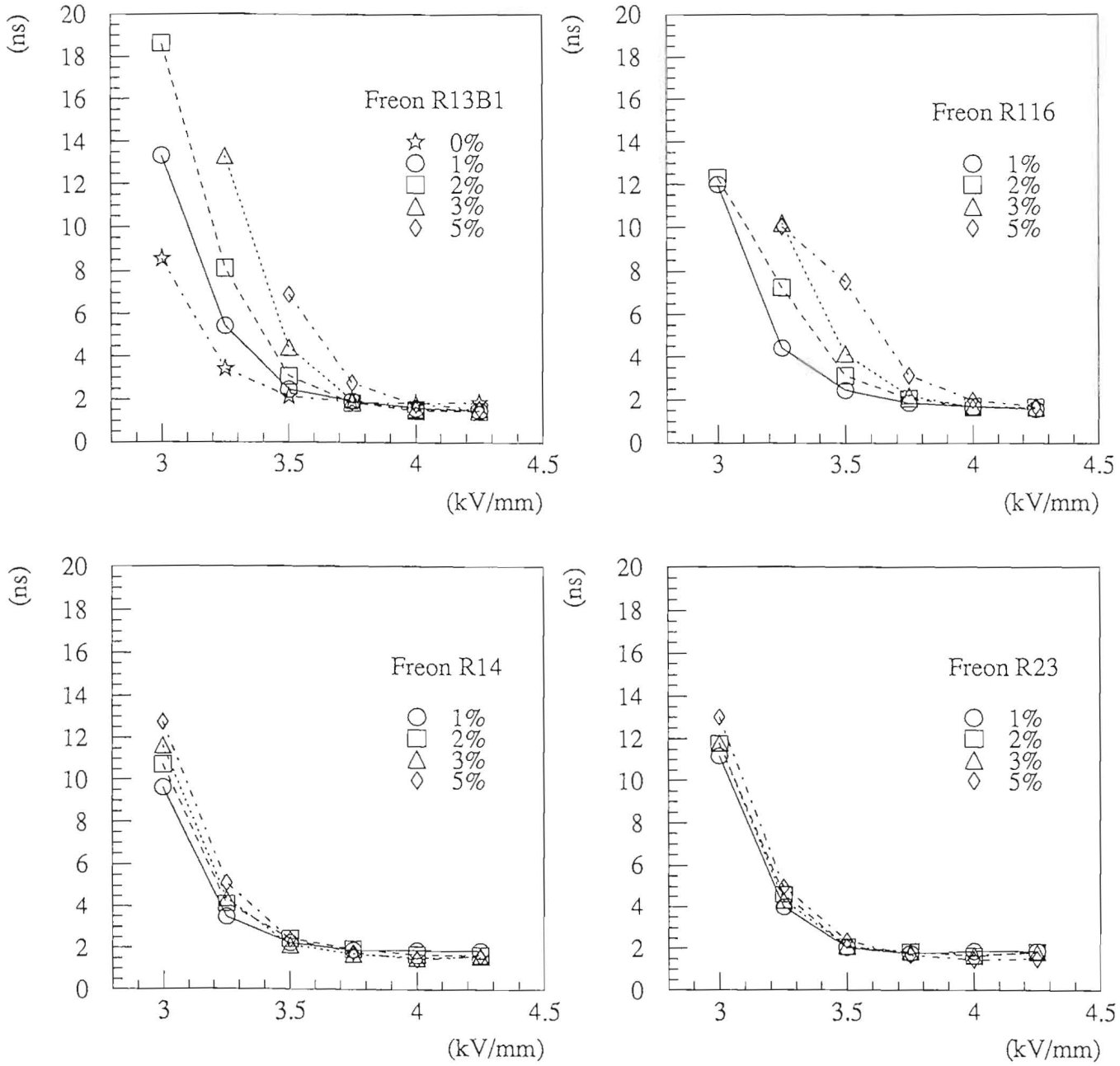

94/05/20 13.02

Single Rate vs Electric Field

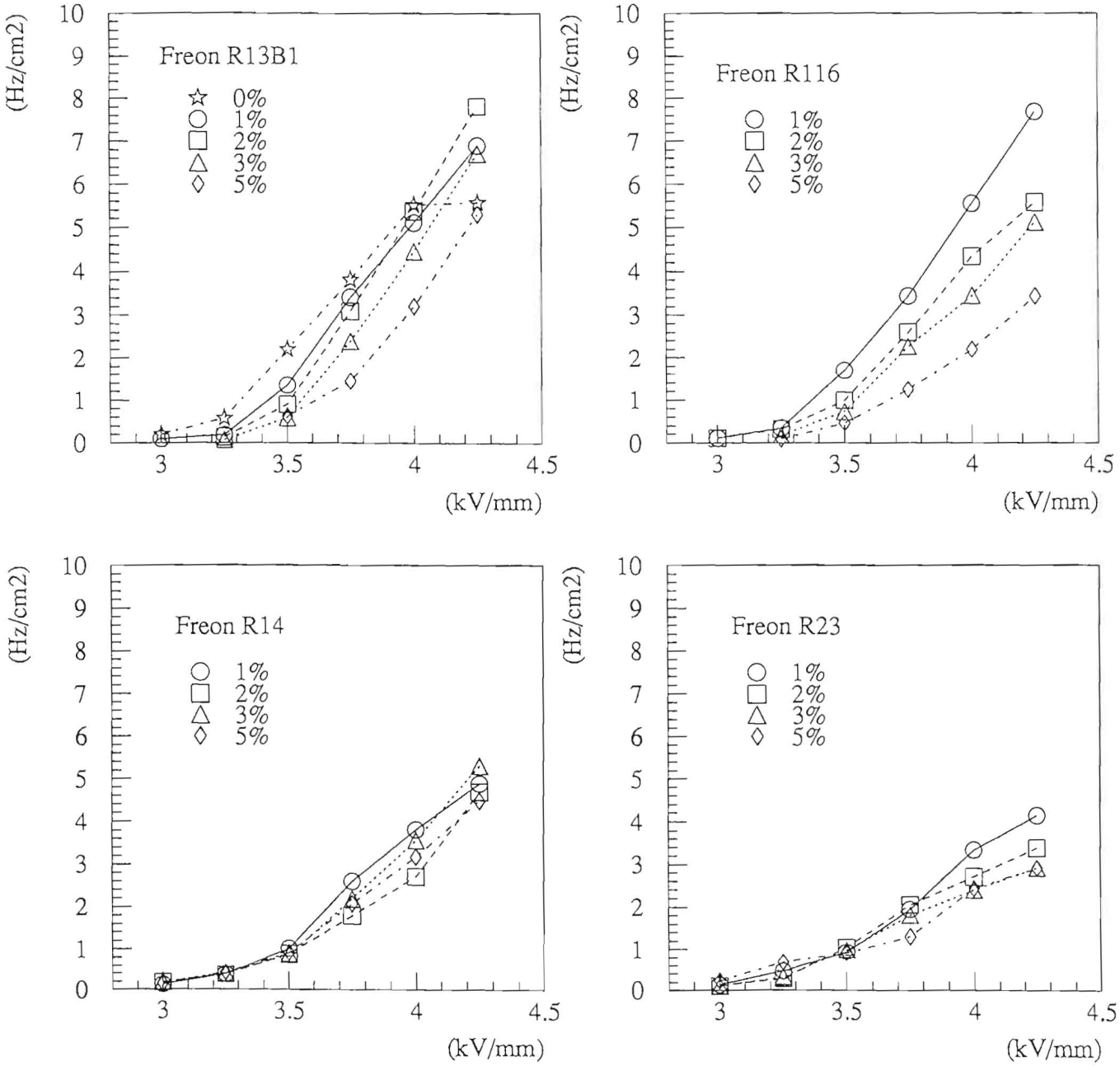

94/05/20 13.06

Efficency vs Electric Field

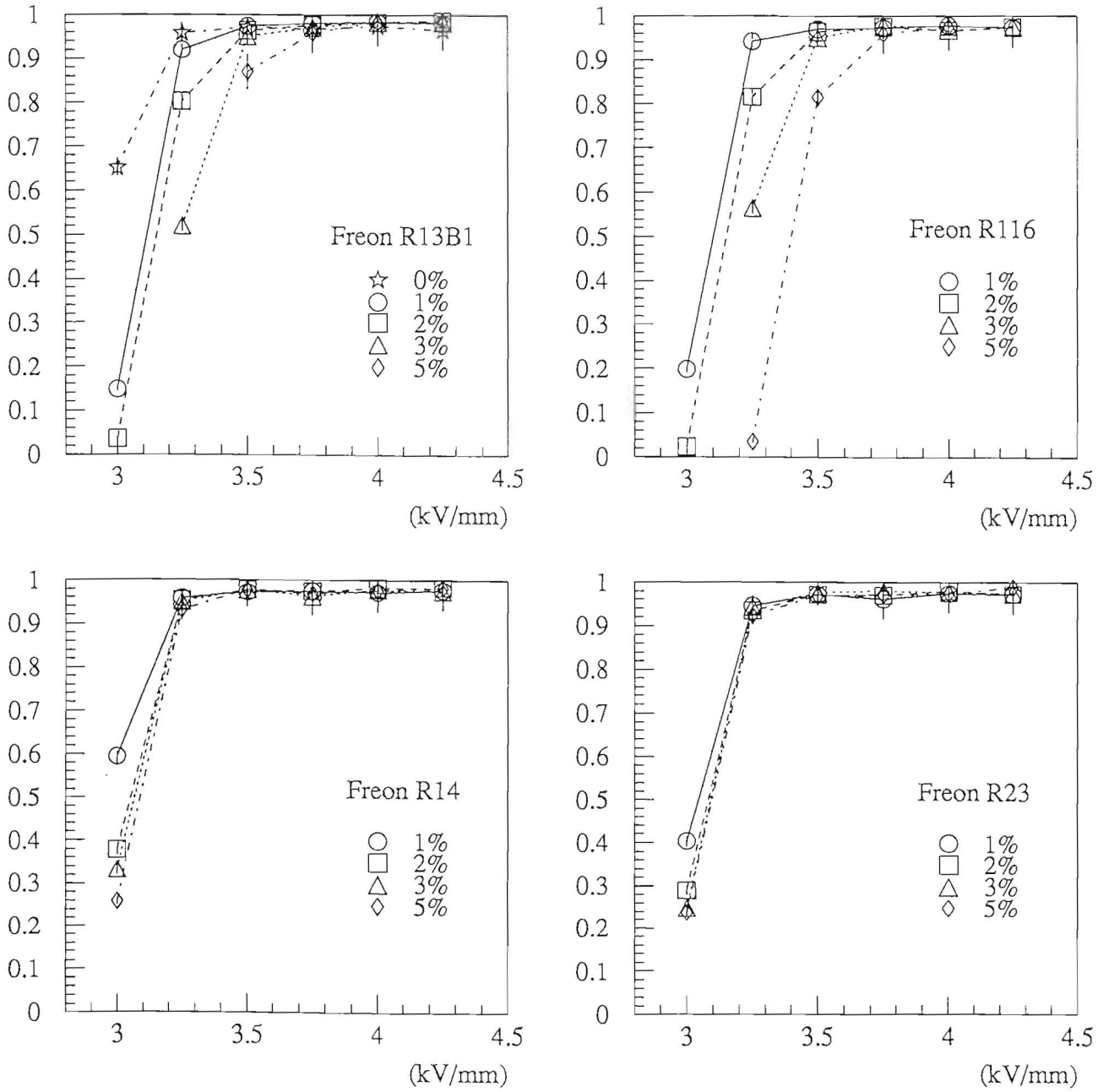

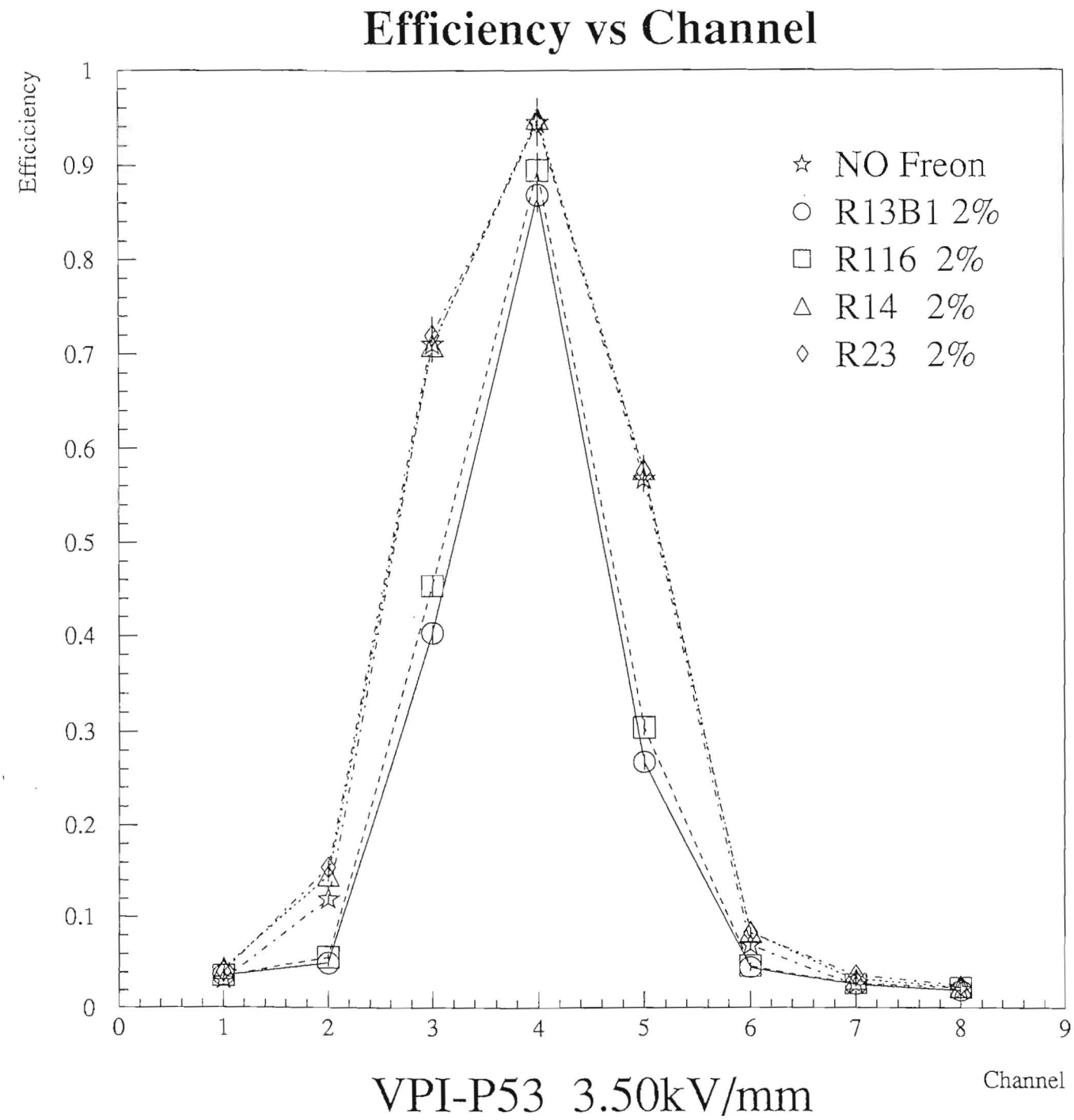
Efficiency vs Channel
Efficiciency
1
0.9
0.8
0.7
0.6
0.5
0.4
0.3
0.2
0.1
0
0
1
2
3
4
5
6
7
8
9
NO Freon
R13B1 2%
R116 2%
R14 2%
R23 2%
Channel
VPI-P53 3.50kV/mm