THE THERMODYNAMIC RESPONSE OF THE TTF LIQUID HELIUM SYSTEM TO A STEP CHANGE IN HEAT LOAD

Tom Peterson
29 July 1993

ABSTRACT

Calculations have been done regarding the pressure and temperature response of the string of 32 helium vessels in TTF to a step change in heat load. For a single RF pulse of 8 ms duration, 10 times the present 0.8 msec design, the pressure change is 0.007 mbar, or 0.11 mK temperature change. The volume of liquid necessary to have no more than a 0.1 mbar pressure pulse is 3.4 liters of liquid helium per cavity, which is to be compared to our present 50 liters per cavity.

The longer-term effect of power-off to power-on is a 0.21 mbar/min increase in pressure if no adjustments of the pumped flow rate and no compensation with a heater are made.

INTRODUCTION

Due to the sensitivity of the RF cavity tune to the pressure in the surrounding helium bath, it will be necessary to have a very steady helium bath pressure in the Tesla Test Facility (TTF). We would like variations in pressure of no more than 0.1 mbar. However, the large dynamic heat load when RF power is on will increase the helium vaporization rate by a factor of about three over the power-off condition, which may cause a sudden change of pressure.

Calculations are presented here for two different time scales. The first is a look at what happens to pressure and temperature within the helium bath as a result of heat from one pulse of RF power. In particular, it is an attempt to answer the question of how much liquid surrounding the cavity is required in order to have a pressure pulse of less than 0.1 mbar due to an RF pulse. The second calculation is an attempt to see what happens over a longer time scale, with a step change in average heat load due to a change from power-on to power-off or visa-versa.

HEAT FROM ONE RF PULSE

Assumptions

The April 1992 "Proposal to Construct and Test Prototype Superconducting R.F. Structures for Linear Colliders" (reference 1) describes an 0.8 ms RF pulse length with a 10 Hz repetition rate. But it is possible that the pulse length will be extended, perhaps to as much as 8 ms for a rep rate of 1 Hz rather than the original 10. The longer, less frequent pulses deposit the same average power in the RF cavity, but the energy per pulse is larger, so to conservatively check the effect of a single pulse the 8 ms, 1 Hz case will be considered. This should provide an upper limit on

the effect of a single pulse.

"As input we know that the instantaneous rate of dissipation in each cavity is 115 Watt during the pulse. Another 50 Watt, approximately, comes from HOM, and then not all cavities may have the good Q value we hope for, so we might have to plan on 200-300 W/m dissipation at 2 K during the pulse." (M. Tigner, personal communication.) So assume 300 Watts per cavity for 8 msec, hence 2.4 Joules deposited per pulse. The cavity is approximately 12.3 Kg of niobium, and at 1.8 K that holds 0.18 J/K. So the metal cannot hold all the heat during the pulse and dissipate it between pulses; the heat must go into the helium during the pulse. With a surface area of 5740 sq cm and 300 W the heat flux into the helium is 0.052 Watts per sq. cm., assuming uniform heating. This is well below the point of bubble or gas film formation in superfluid (see Figure 1, from reference 2), so the heat is carried into the superfluid and evaporation occurs at the liquid surface. Figure 1 indicates a metal surface temperature of about 0.1 K above the liquid temperature for this heat flux. So the cavity wall should go to about 1.9 K, depending on the Kapitza conductance of Niobium.

The rate of heat transport ("second sound" velocity) is 20 m/sec in superfluid at 1.8 K, which means the heat travels 16 cm during the 8 msec pulse. The various distances to the surface from the cavity wall will spread the times over which the heat reaches the surface and evaporates helium, but not by a lot, so I will assume the helium is vaporized and the liquid uniformly heated after the 8 msec pulse.

FIGURE 1 (from reference 2)

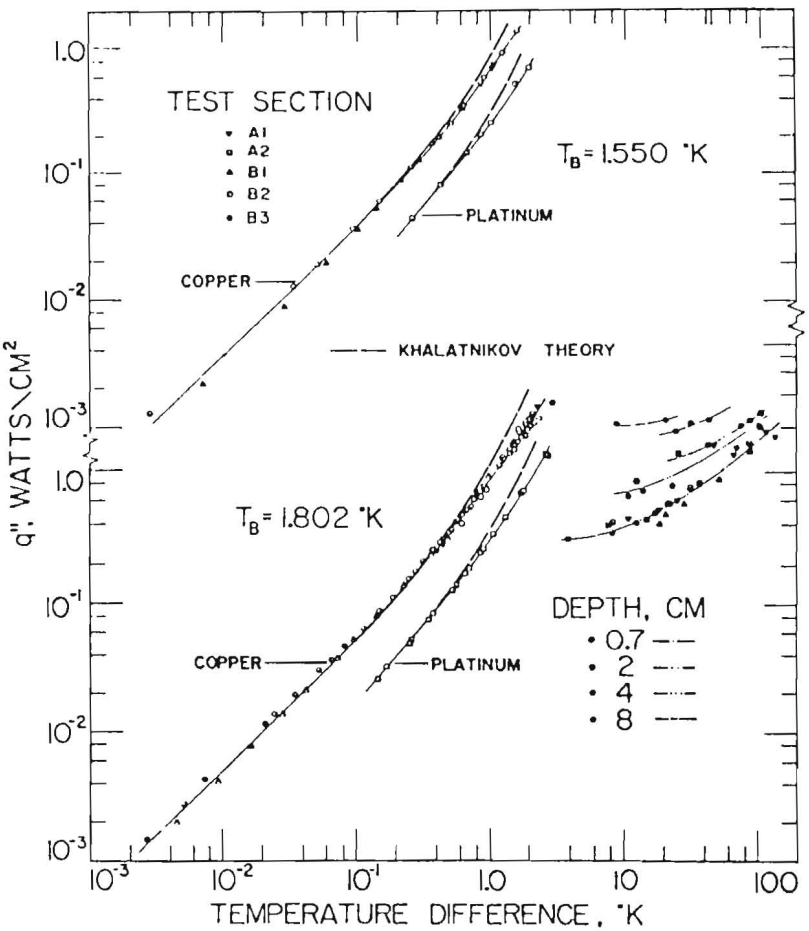

The speed of sound in saturated helium vapor at 1.8 K, 16 mbar, is 78 m/s, or 7.8 cm/millisec (reference 3). So during the 8 msec pulse the pressure pulse can travel 62 cm. This says the 300 mm header can be ignored during the time duration of one pulse, and we can look at the helium vessel as a closed system on this time scale.

To summarize then, the model for one pulse is the helium vessel as a closed, two-phase system, absorbing a pulse of 2.4 Joules of energy which is evenly distributed through the system.

Heat capacity of system

In order to estimate a heat capacity for this "closed system" of liquid and vapor helium, the following calculations were made. Assuming volumes of 52.5 liters of liquid and 25 liters of vapor per helium vessel (see figure 2), a total mass of helium at 1.8 K, 16 mbar, and a total enthalpy (liquid plus vapor) was calculated. Then using the properties of helium at 1.85 K, 19 mbar, (reference 3) a new vapor volume and liquid volume for the same total helium mass in the same total volume was calculated. From those new liquid and vapor volumes (about 28 milliliters of liquid evaporates when the closed volume warms to 1.85 K and the pressure goes up to 19 mbar), a new total enthalpy can be calculated. The difference in enthalpies going from 1.8 K to 1.85 K with this fixed mass in the helium volume gives the energy the system absorbed during the 0.05 K temperature rise, corresponding to a 3 mbar pressure rise. So this provides a heat capacity per unit volume per millibar.

It turns out that the energy absorbed by this "closed system" is basically all absorbed by the liquid in warming to the temperature corresponding to the new vapor pressure. So one can use the "Cp" for saturated liquid in order to get a good estimate of how much energy the "closed system" can absorb with a small temperature (or pressure) change.

FIGURE 2
Volumes and Surface Areas for One Cavity

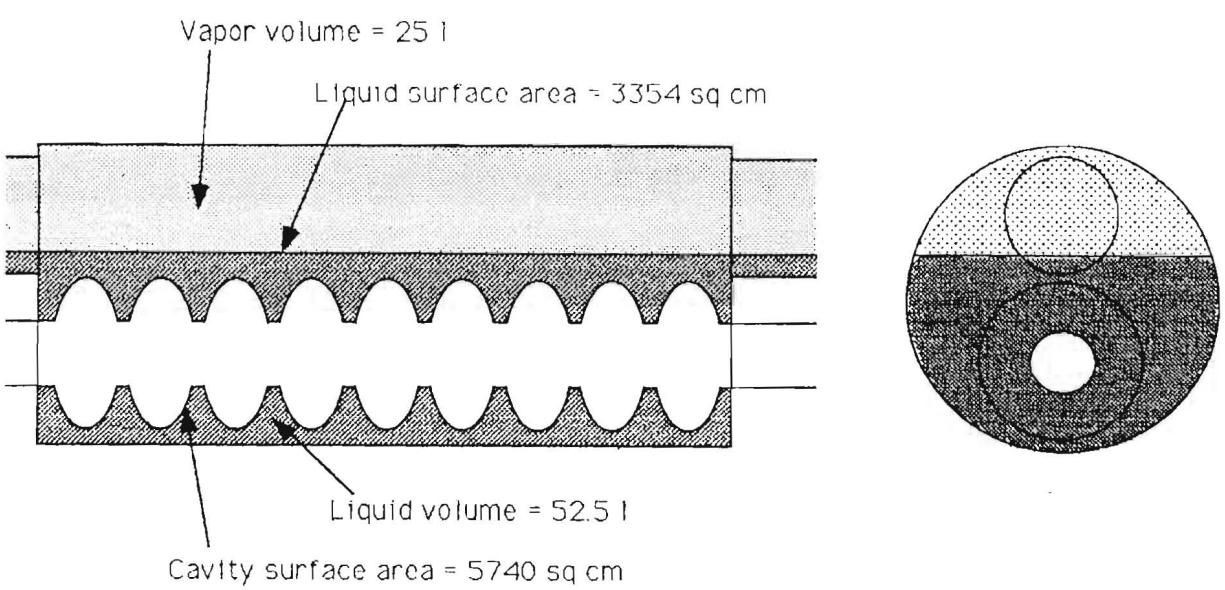

The result is that the liquid absorbs 7.4 Joules/liter per millibar, and the vapor 0.6 Joules/liter per millibar. Doing the same calculation for a variety of liquid-to-vapor ratios to check the effect of the liquid/vapor ratio, gives a range of 6.8 to 7.4 J/l per mbar in the liquid, and the vapor always abosorbs 0.6 J/l per mbar. Cp for saturated liquid at 1.8 K is 2.93 J/gK or 7.1 J/liter per mbar, right in the middle of this range. Therefore, 7 J/liter per mbar is a good estimate of the heat capacity of the 1.8 K liquid bath.

Conclusion for a single pulse

So with the liquid absorbing 7 Joules/liter per millibar, total liquid volume to get us through the 2.4 Joule pulse with a 0.1 mbar pressure rise is 3.4 liters per cavity, compared to our 50 liters. We are adding 2.4 Joules per 50 liters, or 0.048 Joules/liter per pulse. This results in a pressure change of 0.007 mbar per pulse, or 0.11 mK temperature change per pulse.

Note that this does not add with sequential pulses, since between pulses the pressure is dissipated into the 300 mm header. The next calculation described here is a look at the longer-term average effect on pressure and temperature.

LONGER-TERM CONSEQUENCES OF AN AVERAGE CHANGE IN HEAT LOAD

Introduction

The four-module test will be a much smaller system than a TESLA cryogenic string, one third of the 144 meter length supplied by one JT valve in TESLA, and 1/36 of the 1750 meters connected to one helium pumping system and helium refrigerator. Therefore, TTF will have different time constants from the large TESLA system for pressure change after step-changes in heat load. In TTF one JT valve will supply liquid to 4 twelve meter long modules. The liquid will be sightly up into the 100 mm tubes between helium vessels, so the 48 meter length behaves like one long pool of liquid as the level rises and falls slightly.

Changes in heat load to the 1.8 K liquid will cause the rate of pumping by the room-temperature pumping system to exceed or lag behind the steady-state evaporation rate, resulting in a gradual cooldown or warmup of the liquid and a corresponding pressure change. An imbalance in the rates of liquid supply and evaporation will cause a liquid level change and require an eventual adjustment of the liquid supply rate. The purpose of these calculations is to see how fast the pressure and temperature change around the RF cavities after power is turned off or on.

Assumptions

Each cavity contains about 52.5 liters of liquid and about 25 liters of vapor, and has a liquid surface area of about 3354 sq. cm. (see figure 2). Therefore, the 8 x 4 = 32 helium vessels in the string test contain about 1680 liters of liquid helium at 1.8 K, or 243600 grams of liquid. A liquid surface area of 3354 sq. cm. per cavity implies 107300 sq. cm. total surface area for this system.

Suppose the string of 32 RF cavities (4 modules) is at steady-state under full power, so 16.2 Watts of heat per module

are vaporizing the 1.8 K liquid helium (from Table 4.2 in reference 1.) In addition, suppose end effects and various end can and feed can heat loads add 20 Watts to the 1.8 K temperature level.

Calculations

This results in a total 1.8 K heat load of (16.2 W)x(4 modules) + 20 W = 84.8 W. At this temperature the latent heat of vaporization is 23.18 J/g. Since the heat load is exactly balanced by the liquid supply rate, the JT valve is supplying (84.8 W)/(23.18 J/g) = 3.66 g/s of liquid. (Note: the JT valve with 2.2 K, 3 bar supply, for example, provides 82% liquid and 18% vapor at 16 mbar, so this liquid supply rate of 3.66 g/s corresponds to a total flow rate of 4.46 g/s, with 0.80 g/s vapor at the JT valve.)

Now suppose the power trips off, but the cryogenic system continues to operate unchanged, i.e., the JT valve continues to provide 3.66 g/s of liquid and 0.80 g/s of vapor, and the pumping system continues to pump 4.46 g/s at 16.35 mbar. The vaporization rate due to the heat load is now just the static heat load, 4.8 W per module plus end effects, or (4.8 W)x(4 modules) + 20 W = 39.2 W. This evaporates (39.2 W)/(23.18 J/g) = 1.69 g/s. Since the pumping system continues to pump 4.46 g/s, there is a tendency for the pressure over the liquid to drop, but as it does so the liquid evaporates since it is at 1.8 K, the temperature corresponding to 16.35 mbar. The evaporation rate matches the pumping rate, maintaining the pressure at the equilibrium pressure for the liquid temperature. The excess evaporation of 3.66 g/s - 1.69 g/s = = 1.97 g/s cools the liquid. This rate of cooling is (1.97 g/s)x(23.18 J/g) = 45.6 W, just the amount of heat no longer added to the system.

At 1.8 K the saturated liquid enthalpy changes 2.93 J/gK as temperature changes. So the rate of temperature change due to this 45.6 W of cooling is (45.6 W)/((2.93 J/gK)x(243600 g)) = = 6.4x10**-5 K/sec, or 0.004 K/min. At 1.8 K the ratio of change of temperature and pressure is 0.0184 K/mbar. So the 0.004 K/min cooling is 0.21 mbar/min decrease in pressure. Note that this rate of change is inversely proportional to the amount of liquid helium.

Note that the initial response of the system is to cool, while the liquid level remains steady since the rates of liquid supply and evaporation initially do not change. But as the liquid cools, the pumping rate and, hence, the rate of evaporation decrease. The constant rate of liquid supply then exceeds the evaporation rate, so the liquid level rises.

Even if no adjustments to the pumping rate or vaporization rate are made, this 0.21 mbar/min pressure decrease does not continue indefinitely, of course, but the system approaches a new steady-state pressure level. Assuming a constant volume rate of pumping and that the helium supply rate is adjusted to maintain a steady liquid level, the new steady-state corresponds to the pressure at which the helium density at the pumps results in a mass flow rate matching the new total flow rate. The initial total pumped flow rate was 4.46 g/s, and the new total steady-state pumped flow is 2.16 g/s. With a constant pumping speed, the density change at the pumps to make this mass flow change is 2.16/4.46 or 0.48. The new inlet pressure at the pumps is 0.48 of the initial inlet pressure. Neglecting pressure drops, this means the bath pressure decreases by 0.48, from 16 mbar to about 8 mbar,

corresponding to about 1.6 K.

Figure 3 is a plot of pressure versus time following the turn-off of RF power if no adjustments to the volume rate of pumping and no compensation with a heater are made. The slope at t = 0 is -0.21 mbar/min.

Now consider the case when the system is at steady-state without power, and power is turned on. Liquid is evaporating at a rate of 1.69 g/s from the 39.2 W static heat load. So the JT valve is providing 1.69 g/s of liquid, and, if its inlet is 2.2 K, 3 bar, also 0.37 g/s of vapor. When the RF power is turned on the total load becomes 4x16.2 W + 20 W = 84.8 W. Suppose the pumping rate and JT supply remain constant. The excess 45.6 W now added to the system tends to evaporate an additional 1.97 g/s and raise the vapor pressure, but since the liquid is at the temperature corresponding to 16.35 mbar, the vapor pressure can only increase as the liquid warms. (It is as if the additional vapor generated recondenses into the liquid, depositing its latent heat in the liquid.) The saturated liquid absorbs 2.93 J/gK as temperature changes at around 1.8 K, so the rate of warming is (45.6 W)/((2.93 J/gK)x(243600 g) = 0.004 K/min, which corresponds to 0.21 mbar/min pressure rise.

If no adjustments are made except to the JT supply in order to maintain a steady liquid level, the pressure would eventually reach about 32 mbar, corresponding to 2.0 K.

Figure 4 is a plot of pressure versus time following the turn-on of RF power if no adjustments to the volume rate of pumping and no compensation with a heater are made. The slope at t = 0 is 0.21 mbar/min.

Conclusion

Turning on or off the power to the four modules in the string test results in a 0.21 mbar/min decrease or increase in pressure. If we want to keep pressure steady within +/- 0.1 mbar, the pumped flow rate has to be adjusted within 30 seconds. This amount of time is proportional to the amount of liquid helium. If the liquid inventory were cut in half, for example, the response time available for the controls would be cut in half. A heater in the end can could be used to provide a more nearly constant vaporization rate, reducing the requirement for flow control. Only about 12 W per module would compensate for dynamic loads during these tests.

Liquid level will tend to be very stable. The initial effect of a heat load change will be for the system to cool down or warm up, with liquid level depending only on the ratio of pumped flow and supply flow.

REFERENCES

1. The TESLA Collaboration, A Proposal to Construct and Test Prototype Superconducting R.F. Structures for Linear Colliders, April 1992.

2. J. S. Goodling and R. K. Irey, Non-boiling and Film Boiling Heat Transfer to a Saturated Bath of Liquid Helium, in Advances in Cryogenic Engineering, Volume 14, 1969.

3. Robert D. McCarty, NBS Technical Note 1029, The Thermodynamic Properties of Helium II from 0 K to the Lambda Transitions, 1980.

FIGURE 3

Pressure vs. Time in TTF after the Turn-off of RF Power

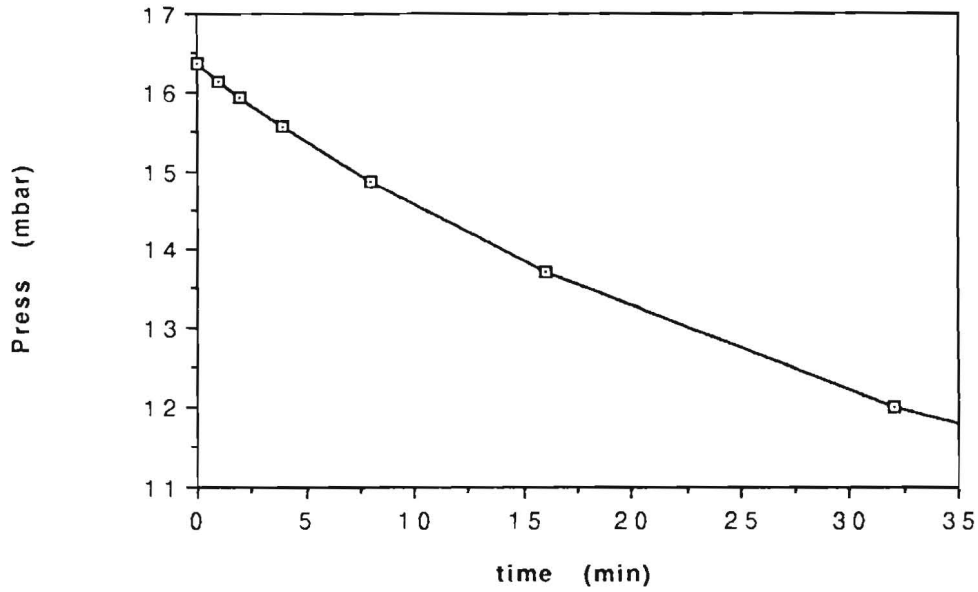

FIGURE 4
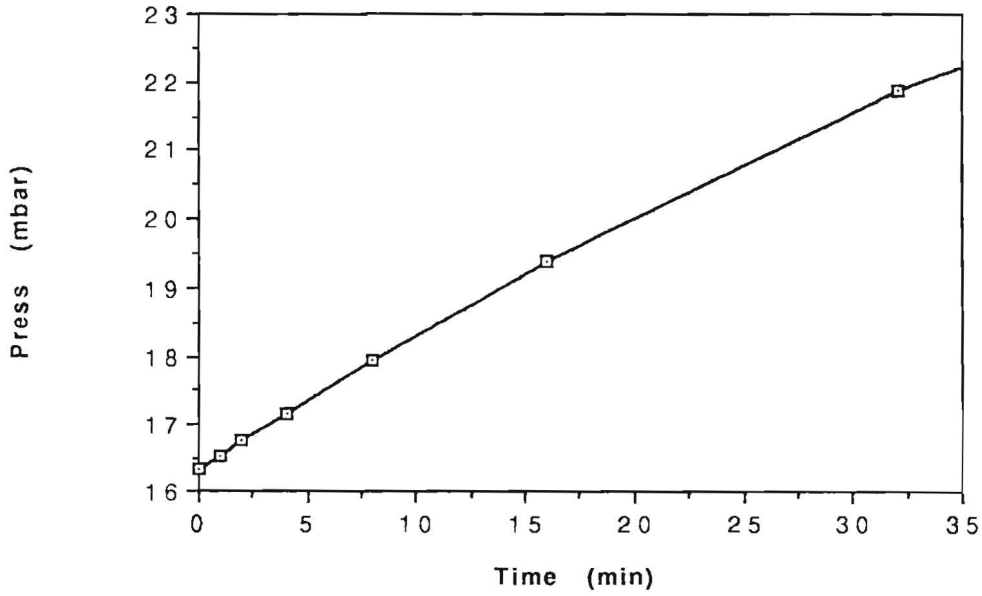
Pressure vs Time in TTF after the Turn-on of RF Power