T.ESLA-93-33-J

High Power Test of RF Window and Coaxial Line in Vacuum

D. Sun, M. Champion, M. Gormley, Q. Kerns, K. Koepke, A. Moretti
Fermi National Accelerator Laboratory*
P.O. Box 500, Batavia, Il 60510

3

Fermilab Library
0 1160 0020872 2

Abstract

Primary rf input couplers for the superconducting accelerating cavities of the TESLA electron linear accelerator test to be performed at DESY, Hamburg, Germany are under development at both DESY and Fermilab. The input couplers consist of a WR650 waveguide to coaxial line transition with an integral ceramic window, a coaxial connection to the superconducting accelerating cavity with a second ceramic window located at the liquid nitrogen heat intercept location, and bellows on both sides of the cold window to allow for cavity motion during cooldown, coupling adjustments and easier assembly. To permit in situ high peak power processing of the TESLA superconducting accelerating cavities, the input couplers are designed to transmit nominally 1 ms long, 1 MW peak, 1.3 GHz rf pulses from the WR650 waveguide at room temperature to the cavities at 1.8 K. The coaxial part of the Fermilab TESLA input coupler design has been tested up to 1.7 MW using the prototype 805 MHz rf source located at the A0 service building of the Tevatron. The rf source, the testing system and the test results are described.

I. INTRODUCTION

TESLA [1] is a proposed 500 GeV center of mass energy e+e- linear collider utilizing superconducting rf accelerating cavities. An international effort under the direction of DESY is collaborating to assemble a TESLA test facility at DESY including an electron source, 40 m of superconducting accelerating cavities, cryostats, accelerating rf, beam diagnostics, and the infrastructure necessary to produce and test the superconducting cavities.

A TESLA accelerating module consists of a cryostat nominally 10 m long and contains 8 niobium accelerating cavities. Each accelerating cavity is nominally 1 m long and contains 9 contiguous niobium accelerating cells that are tuned to 1.3 GHz. Each 9 cell cavity is excited in the pi mode with a single input coupler.

Input couplers are under development at DESY [2] and Fermilab [3]. The Fermilab input coupler design is shown in Figure 1. The function of the input coupler is to transmit the rf energy from the klystron power distribution system, WR650 waveguide at room temperature, to the cavities at 1.8 K. The cylindrical ceramic window within the WR650 "doorknob" transition isolates the pressurized waveguide from the required high vacuum of the cold coaxial section. The conical ceramic window maintains the ultraclean environment required by the superconducting cavities during their assembly and testing. During normal operation, this window acts as backup to the warm window and prevents contamination of the entire accelerator in the event of a warm ceramic window failure.

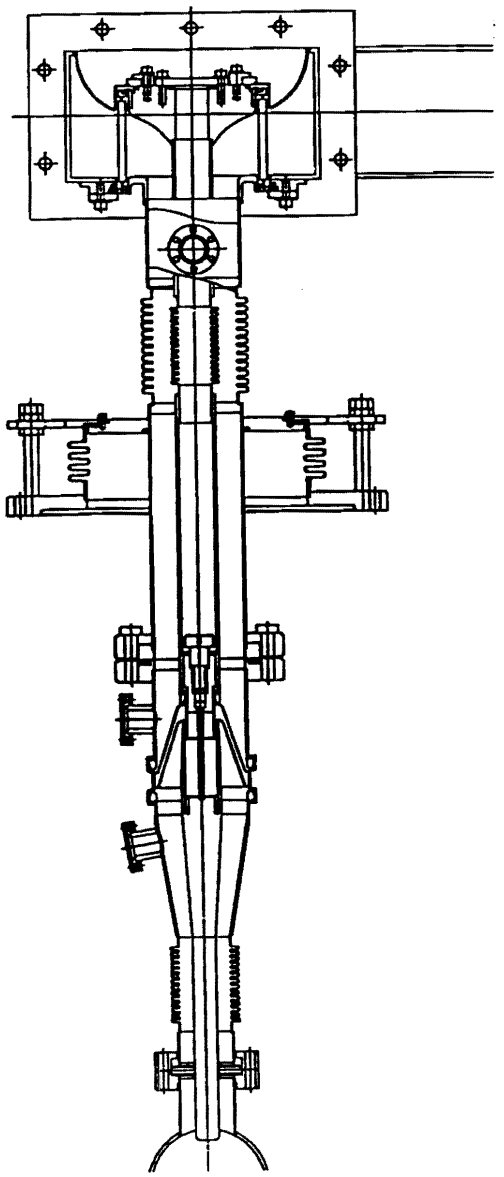

Figure 1. TESLA input coupler tested at A0.

*Operated by Universities Research Association under contract to the U.S. Department of Energy.

Normal operating conditions for the coupler during beam acceleration are a peak power of 200 kW, a nominal 2 ms pulse length and a pulse repetition rate of 10 Hz. An estimated 1 MW peak power with reduced pulse length and repetition rate to keep the average coupler power unchanged, is necessary if in situ high peak power conditioning of the cavities is planned. At this peak power level, the performance of the coupler, and in particular, the behavior of the ceramic windows and bellows, can no longer be reliably predicted, and at the very least, careful initial rf conditioning of the coupler is expected to be necessary before it functions reliably.

As an rf system at 1.3 GHz and at a peak power level above 1 MW is currently not available to us, we have used the operating spare klystron of the Fermilab linac upgrade [4] to test the coaxial part of the Fermilab TESLA input coupler. This source is located in the A0 service building of the Tevatron where it was previously used to rf condition the Fermilab Linac Upgrade accelerating cavities. The rf source produces 120 µs long, 12 MW peak power rf pulses at a frequency of 805 MHz. Except for multipactoring, the difference in operating frequency does not significantly affect the behavior of the coaxial part of the input coupler as it was designed to have a constant 50 ohm impedance throughout, and the conical ceramic window is "thin". The complete coupler, including the "doorknob" transition with its narrow band width, will be tested at a later date with a 1.3 GHz rf system under assembly at Fermilab.

II. GEOMETRY AND INSTRUMENTATION

The goals of the rf tests at A0 were to subject TESLA input coupler components to peak power levels at least equal to their 1 MW design level, to find the rf breakdown thresholds by raising, if necessary, the peak rf power above 1 MW , and to determine the locations and mechanisms of the rf breakdown. These goals necessitated a somewhat more elaborate test geometry than normally used to condition rf components.

The test equipment that has been added to the A0 rf system is depicted in Figure 2. The rf power enters and leaves the test equipment through the two WR975 to 3 1/8 inch coax couplers shown at the bottom of the figure. Not shown are the forward and backward directional couplers in the waveguide upstream of the test insertion to measure the rf power, and the waveguide ceramic windows contiguous to the WR975 couplers to allow high vacuum in the test device. Two standard 3 1/8 inch rigid coax sections, each 12 inches long, and two rigid 3 1/8 inch coaxial elbows complete the rf circuit. The test geometry is physically symmetric relative to the test device. The coaxial part of the TESLA input coupler tested has an outer coaxial diameter between 4 cm to 6 cm. Therefore,

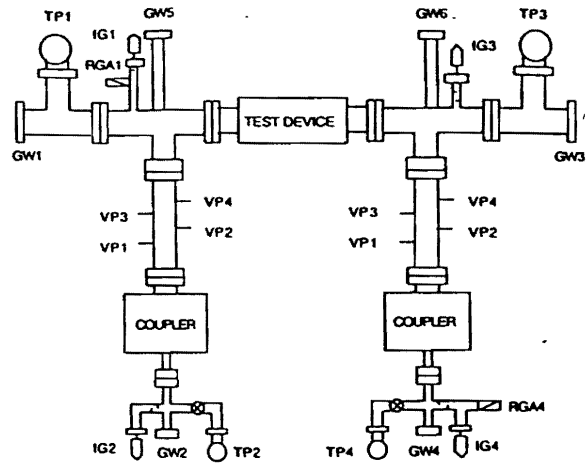

A0 TEST SETUP

TP: TURBO PUMP
IG: ION GAUGE
RGA: RESIDUAL GAS ANALYZER
GW: GLASS WINDOW
VP: VOLTAGE PROBE

Figure 2. Test geometry used to test the input coupler.

conical transitions were used to match the inner and outer coax conductors to the 3 1/8 inch rigid coax on either side of the test device. The rf insertion is approximately matched and most of the power is absorbed by an rf load located downstream of the test circuit.

Four turbo pumps were used to evacuate the test volume. Four ion gauges and a residual gas analyzer were used to monitor the vacuum during pumpdown and during the rf testing. Six glass windows, two in line with the test device (GW1 and GW3) and their associated photomultipliers were used to monitor the light output within the test volume. Two additional windows, one glass with a photomultiplier and one KBr window for an infrared monitor, were mounted on either side and close to the cold TESLA window to monitor this critical area. Finally, 8 rf voltage taps spaced 1/8 wavelength apart, 4 upstream and 4 downstream of the test device, were available to locate a breakdown region in the event that the breakdown reflected a measurable amount of rf power.

The controls of the A0 rf system contain 8 triggerable data recording channels that were intended to record transient signals during klystron modulator performance checks or fault diagnosis. Each data channel consists of a digitizer connected to a 120 µs circular buffer with a 1 µs time resolution. These channels were available for transient analysis. In addition, a single data

point per channel was recorded 4 times per minute and stored in a Sun Work Station to maintain a slow time record of the test over many days.

III. PROCEDURE

During the test, the rf pulse length and pulse repetition rate were maintained at 120 μs and 15 Hz, the maximum available from the A0 rf system. The average vacuum at the start of the test was 2.8 10-7 torr. The peak rf power was increased in steps; the amplitude increase per step was determined by the vacuum pressure which was arbitrarily maintained below 2.0 10-6 torr. The vacuum pressure was allowed to recover at constant rf power until it reached a pressure of 4.0 10-7 torr at which point the rf power was again increased. The power threshold at which the vacuum first responded to the rf was 3.6 kW.

The photomultipliers were calibrated by measuring their outputs when located at the same position. Their outputs indicate relative light intensities as a function of rf power, time, and location. The photomultiplier outputs were continuously observed during the coupler conditioning but were not used to determine the rate at which the rf power was increased.

The temperature of the conical ceramic window was monitored with an infrared detector looking directly at the ceramic, and with two thermocouples located on the outer coax conductor near the location where the ceramic was attached with a braze joint. These thermometers were monitored to prevent damage to the ceramic due to thermal stress, and to record the heating rate of the ceramic as a function of rf power through the ceramic window.

IV. RESULTS

Testing has been in progress for one week. The coupler was conditioned to a 1.4 MW peak power level within three days. This time could have been reduced to two days with an automatic conditioning system as the system was operated at a constant reduced power level (20kW and 100 kW) while unattended overnight. Since this initial conditioning, the coupler has operated without interruption for 40 hours at a peak power level of 230 kW, for 16 hours at 1 MW, and 1 hour at 1.7 MW.

During conditioning, the klystron shut off twice due to a klystron window spark and/or high reflected rf power. The first trip occurred at 1.3 MW. The cause of this trip has not been established. The second trip occurred at 1.44 MW and was caused by a spark downstream of the conical window, perhaps in the 4 cm region of the coupler or in the 3 1/8 inch transition. This spark was isolated through high light output at GW3 and GW4, the photomultipliers mounted downstream of the conical window, by low light output from the photomultiplier mounted by the conical window, and by the high vacuum pressure downstream of the conical window. Since then, several more sparks have occurred, apparently in the downstream region, all at or above a peak power level of 1.4 MW.

Steady light related to the rf power has been observed by the photomultiplier located at GW1, that looks at the upstream part of the coupler as far as the conical window, by the photomultiplier located immediately downstream of the conical window, and by the photomultiplier located on the downstream waveguide transition (GW4). The light at GW4 can be conditioned away, reappearing only if the rf is turned to a lower level for an extended time and then returned to its higher original level. The light on either side of the conical window occurs at specific power levels, increasing and decreasing as the power is continuously raised, and up to now has not been completely conditioned away.

V. CONCLUSIONS

The conical part of the tested TESLA input coupler appears to satisfy the normal peak power operating condition of 200 kW. After conditioning, no light is seen below a peak power of 230 kW. Effort continues to understand and eliminate the light still present. A possibility is to locate the conical window at a voltage minimum to reduce the voltage at the window during mismatched operation.

Operation at a peak power level of 1 MW for in situ high peak power conditioning of the cavities is still not certain. Some light during conditioning is acceptable as the conditioning time is short. However, the location of the observed sparks needs to be determined and the cause corrected.

VI. REFERENCES

[1] *A Proposal to Construct and Test Prototype Superconducting R. F. Structures for Linear Colliders*, DESY, April 1992

[2] B. Dwersteg, M. Marx, D. Proch, "Conceptional Design of a RF Input Coupler for TESLA", DESY 1992

[3] M. Champion, D. Peterson, T. Peterson, C. Reid, "Tesla Input Coupler Development", these proceedings

[4] H. Pfeffer, et al. "Solid State 24 MW Modulator for Fermilab's 400 MeV Linac", Twentieth Power Modulator Conference, Myrtle Beach, South Carolina, June 1992

A new surface treatment for niobium superconducting cavities

B. Bonin, C. Henriot, C. Antoine, B. Coadou, F. Koechlin, J.P. Rodriguez, Groupe d'Etudes des Cavités Supraconductrices
DAPNIA-SEA, CE Saclay, F–91191 Gif/Yvette, France
E. Lemaître, P. Greiner, Laboratoire Moderne de Soudage
DTA-CEREM-DTM-STA-LMS, CE Saclay, F–91191 Gif/Yvette, France

Dupe

Abstract

A condition necessary for the successful performance of superconducting cavities is the cleanliness of their inner surface. The firing of niobium cavities under vacuum at very high temperature is known to be a particularly effective method for cleaning the surface and for suppressing electron field emission. However, this process is inconvenient and expensive, if it is done in the "usual way", ie in a high vacuum furnace. We propose an alternative technique for cavity firing, using local heating in an electron beam or laser welding facility. This treatment is easy, and can readily be integrated in the usual process of cavity production. Initial tests at Saclay have given very promising results.

I. INTRODUCTION

The cleanliness of the inner surface of superconducting cavities is an indispensable condition for the successful performance of these accelerating structures. The firing of niobium cavities under vacuum at very high temperature is in wide favor in many laboratories for at least two reasons : i) when used in association with solid state gettering (e.g. titanification or yttrification [1]), it permits a purification and a homogenization of the material, with a subsequent improvement of its thermal conductivity, and a better stabilization of the cavity against quenches; ii) this treatment seems to inhibit the activity of the microscopic sites where electron field emission takes place. The field emission threshold which limits the accelerating gradient available in the cavity is then pushed to higher levels.

However, firing is usually done in a high vacuum furnace, which makes the process inconvenient and expensive. There is also a very serious risk of recontamination of the cavity surface during the furnace venting, since the cavity is necessarily open during treatment. The benefits of the bulk purification of the material are then kept, but the protection of the cavity against field emission may be lost after the treatment. Firing of niobium cavities in a high vacuum furnace is thus difficult to integrate in an industrial process of cavity production.

We have explored an alternative technique, which employs local heating in an electron beam welding facility. The interst of the method lies mainly in its simplicity and its rapidity. The local character of the heating may also present some advantages : for instance, the cavity flanges can be spared during the treatment. This alleviates the need for refractory flanges, and opens up the interesting possibility of firing *closed* cavities.

II. EXPERIMENT

All the firing experiments were done in the EB welding machine of LMS, at Saclay. Its TECHMETA electron gun delivers an electron beam of controllable energy, intensity and focusing. The electron beam pencil can be moved and vibrated across the sample surface by means of suitable deflecting electrodes. The vacuum in the vessel is no better than 10^{-3} Pa.

The first firing tests were made on 2mm thick niobium sheet samples. The sample temperature during firing was measured by means of a bichromatic optical pyrometer viewing the sample through a window in the EB welding machine. The accuracy of the measurement was on the order of ± 100°.

In all practical cases, the electron beam dwell time on one given point of the surface was long as compared to the characteristic time of heat diffusion across the niobium sheet. For this reason, we believe that the temperature was identical on both sides of the sheet.

The first tests showed that any chosen temperature between 1000° and 2000° C could be reached and maintained with excellent stability, by a suitable choice of the following parameters : electron energy, beam size, beam intensity and displacement speed.

The fired samples showed a considerable recrystallization: starting from an initial grain size of 50–70 μm, the final grain size was as large as 1 cm for the hottest and longest runs. The initial purity of the Nb samples was RRR=200. No degradation of RRR was observed for the shortest runs (15 sec), but a significant loss of purity (RRR=50) resulted from the long firings (15 min), even at very high temperature. This is attributable to the fact that residual gaseous species present in the vacuum enter readily as interstitials in the niobium lattice at high temperature [2,3]. The important degradation observed can then be ascribed to the poor vacuum in the welding machine.

These considerations led us to protect the niobium before and during firing, by means of a titanium vapor layer deposited on the sample surface by sublimation of a joule—heated titanium filament. Contamination from the residual gases is then confined to the outside titanium layer, and no longer affects the bulk niobium. New RRR measurements after this treatment showed no purity degradation, thus confirming the success of this protection method. In the present experiment, the Ti layer could be deposited only on one side of the Nb sheet sample. In this case, there is probably competition between a pollution of the material from the unprotected side, and a purification from the titanified one. A real purification of the bulk material