TS-SSC 93-002 R. Bossert

Long Coil Springback Data

Coil length of all 50mm ASST dipoles were measured. These measurements reveal the amount of "springback" of each coil. Springback occurs when the tension used while winding the coil is relieved after removing the coil from the mandrel.

Length of each component of the coil ends were also measured. These measurements show whether end closure is adequte and how consistently the ends are conforming to the design lengths.

Measurement positions are shown on pages 2 and 3. Raw data is displayed on pages 4 through 7. Springback and total end lengths are shown in graphical form on pages 8 through 10.

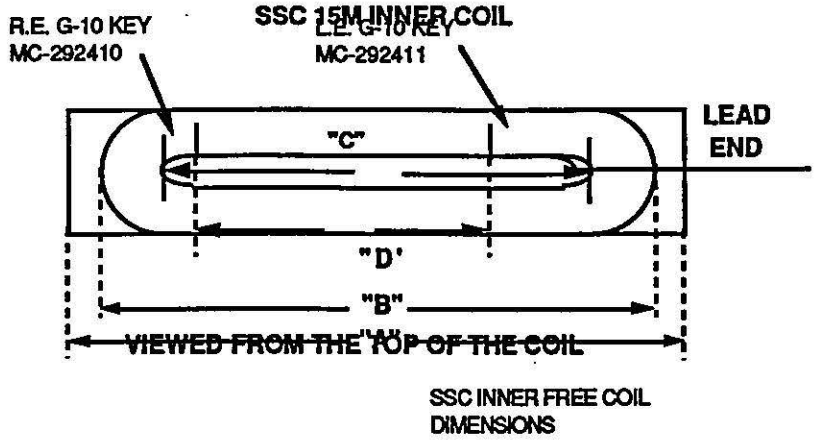

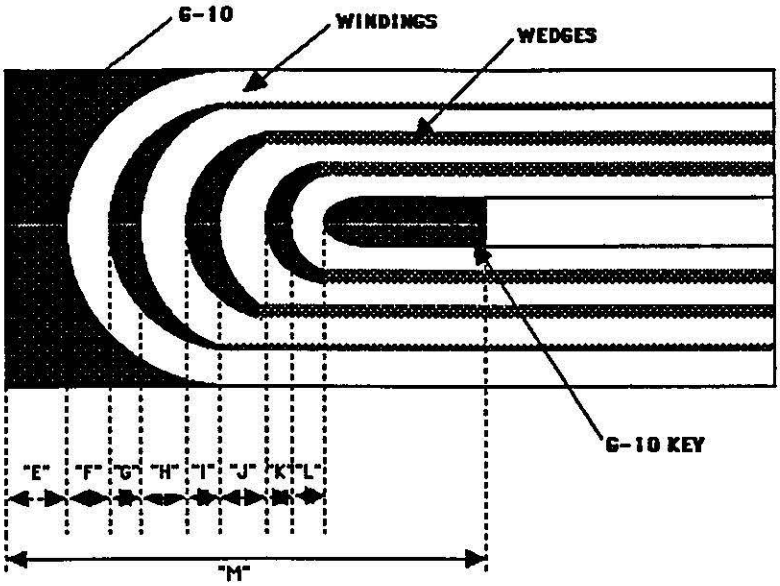

Figure 28 Inner Coil Longitudinal Measurements

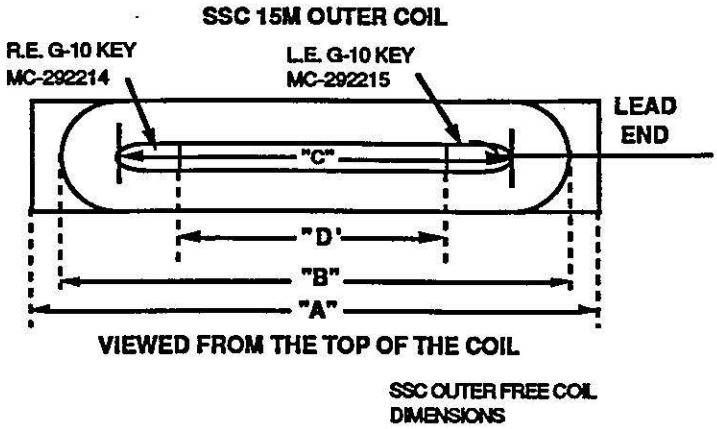

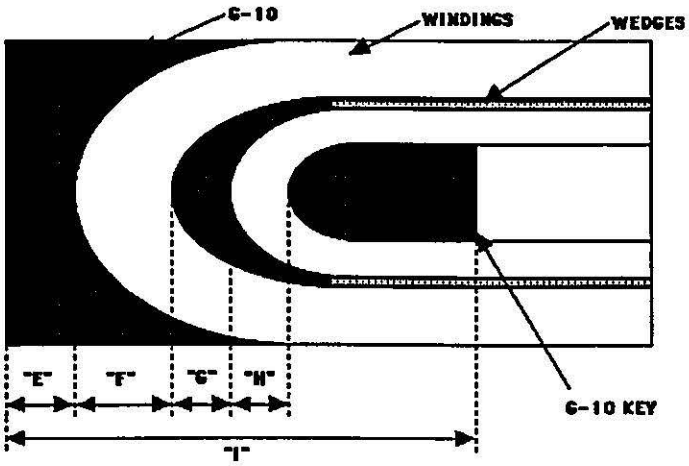

Figure 29 Outer Coil Longitudinal Measurements

Table 3 Inner Coil Measurements

	Average	595.2512	592.5913	584.8059	578.3751	1.2549	1.3984
	StdDev	0.1522	0.1231	0.1379	0.4323	0.0335	0.0235
	Range	0.7813	0.5625	0.7344	1.1875	0.1902	0.0938
	Min	595.0313	592.3750	584.2031	577.5000	1.1250	1.3750
	Max	595.8125	592.9375	584.9375	578.6875	1.3152	1.4688
	Inner	Dimension	Dimension	Dimension	Dimension	Dimension	Dimension
Magnet No.	Coil No.	"A"	"B"	"C"	"D"	L.E. "E"	R.E. "E"
DCA311	15M-50-1003	595.3125	592.625	584.8125	577.5	1.26563	1.40625
	15M-50-1004	595.375	592.6875	584.8125	577.5	1.28125	1.40625
DCA 312	15M-50-1005	595.375	592.6875	584.20313	577.53125	1.26563	1.40625
	15M-50-1006	595.25	592.59375	584.8125	577.53125	1.25	1.40625
DCA 313	15M-50-1008	595.1875	592.5	584.6875	577.5	1.25	1.40625
	15M-50-1009	595.21875	592.53125	584.84375	578.53125	1.3152	1.40625
DCA 314	15M-50-1010	595.125	592.5	584.75	578.5	1.28125	1.40625
	15M-50-1011	595.25	592.5625	584.75	578.46875	1.125	1.40625
DCA 315	15M-50-1012	595.15625	592.53125	584.71875	578.5	1.21875	1.40625
	15M-50-1013	595.1875	592.5625	584.8125	578.5	1.23438	1.375
DCA 316	15M-50-1014	595.375	592.75	584.875	578.6875	1.25	1.375
	15M-50-1015	595.3125	592.6875	584.8125	578.5625	1.25	1.40625
DCA 317	15M-50-1007	595.375	592.6875	584.75	578.5625	1.281125	1.46875
	15M-50-1016	595.3125	592.6875	584.8125	578.5652	1.25	1.375
DCA 318	15M-50-1017	595.3125	592.6875	584.875	578.625	1.25	1.40625
	15M-50-1018	595.8125	592.6875	584.875	578.625	1.29688	1.45313
DCA 319	15M-50-1019	595.28125	592.65625	584.8125	578.5625	1.28125	1.40625
	15M-50-1029	595.25	592.375	584.8125	578.5625	1.25	1.375
DCA 320	15M-50-1021	595.062	592.437	584.875	578.625	1.25	1.375
	15M-50-1022	595.03125	592.40625	584.875	578.625	1.25	1.375
DCA 321	15M-50-1023	595.125	592.5	584.90625	578.625	1.25	1.39063
	15M-50-1024	595.125	592.5	584.9375	578.625	1.25	1.375
DCA 322	15M-50-1025	595.125	592.46875	584.875	578.625	1.25	1.375
	15M-50-1026	595.125	592.9375	584.84375	578.5625	1.25	1.39063
DCA 323	15M-50-1027	595.1875	592.5625	584.9375	578.625	1.25	1.375
	15M-50-1028	595.28125	592.5625	584.875	578.625	1.28125	1.40625

	Average	0.4321	0.4964	1.2752	1.2764	0.6172	0.5980
	StdDev	0.0502	0.0431	0.0276	0.0229	0.0575	0.0565
	Range	0.1875	0.1406	0.1406	0.1250	0.2188	0.1875
	Min	0.3750	0.4219	1.2344	1.2500	0.5313	0.5000
	Max	0.5625	0.5625	1.3750	1.3750	0.7500	0.6875
	Inner	Dimension	Dimension	Dimension	Dimension	Dimension	Dimension
Magnet No.	Coil No.	L.E. "F"	R.E. "F"	L.E. "G"	R.E. "G"	L.E. "H"	R.E. "H"
DCA311	15M-50-1003	0.40625	0.5	1.28125	1.28125	0.60938	0.59375
	15M-50-1004	0.40625	0.5	1.26563	1.26563	0.625	0.59375
DCA 312	15M-50-1005	0.40625	0.5	1.28125	1.28125	0.625	0.59375
	15M-50-1006	0.40625	0.5	1.26563	1.26563	0.59375	0.60938
DCA 313	15M-50-1008	0.39063	0.5	1.25	1.26563	0.5625	0.59375
	15M-50-1009	0.42188	0.46875	1.28125	1.26563	0.59375	0.60938
DCA 314	15M-50-1010	0.40625	0.46875	1.28125	1.28125	0.5625	0.59375
	15M-50-1011	0.40625	0.46875	1.28125	1.28125	0.59375	0.59375
DCA 315	15M-50-1012	0.4375	0.46875	1.28125	1.25	0.59375	0.5625
	15M-50-1013	0.46875	0.5625	1.28125	1.26563	0.65625	0.65625
DCA 316	15M-50-1014	0.5625	0.5625	1.28125	1.28125	0.6875	0.6875
	15M-50-1015	0.46875	0.53125	1.3125	1.28125	0.65625	0.62625
DCA 317	15M-50-1007	0.46875	0.5	1.3125	1.28125	0.6875	0.65625
	15M-50-1016	0.5	0.53125	1.25	1.28125	0.6875	0.6875
DCA 318	15M-50-1017	0.5	0.5625	1.28125	1.28125	0.6875	0.65625
	15M-50-1018	0.48438	0.51583	1.26563	1.26563	0.75	0.67188
DCA 319	15M-50-1019	0.48438	0.54688	1.26563	1.26563	0.6875	0.67188
	15M-50-1029	0.46875	0.5625	1.28125	1.28125	0.65625	0.625
DCA 320	15M-50-1021	0.375	0.46875	1.25	1.26563	0.5625	0.53125
	15M-50-1022	0.40625	0.46875	1.23438	1.28125	0.5625	0.54688
DCA 321	15M-50-1023	0.39063	0.42188	1.26563	1.28125	0.53125	0.53125
	15M-50-1024	0.375	0.45313	1.25	1.28125	0.59375	0.53125
DCA 322	15M-50-1025	0.375	0.4375	1.25	1.25	0.5625	0.53125
	15M-50-1026	0.375	0.4375	1.25	1.25	0.5625	0.5
DCA 323	15M-50-1027	0.375	0.4375	1.28125	1.28125	0.53125	0.5
	15M-50-1028	0.46875	0.53125	1.375	1.375	0.625	0.59375

	Average	0.5252	0.5577	0.2254	0.2248	0.5000	0.5000
	StdDev	0.0154	0.1057	0.0239	0.0221	0.0125	0.0177
	Range	0.0625	0.5625	0.0936	0.0625	0.0625	0.0938
	Min	0.5000	0.5000	0.1875	0.1875	0.4688	0.4375
	Max	0.5625	1.0625	0.2811	0.2500	0.5313	0.5313
	Inner	Dimension	Dimension	Dimension	Dimension	Dimension	Dimension
Magnet No.	Coil No.	L.E. "I"	R.E. "I"	L.E. "J"	R.E. "J"	L.E. "K"	R.E. "K"
DCA311	15M-50-1003	0.51563	0.53125	0.21875	0.25	0.5	0.5
	15M-50-1004	0.53125	0.53125	0.23438	0.23438	0.5	0.5
DCA 312	15M-50-1005	0.51563	0.53125	0.281125	0.23438	0.48438	0.5
	15M-50-1006	0.53125	0.53125	0.21875	0.21875	0.5	0.5
DCA 313	15M-50-1008	0.53125	0.53125	0.23438	0.21875	0.5	0.53125
	15M-50-1009	0.53125	0.53125	0.23438	0.23438	0.48438	0.5
DCA 314	15M-50-1010	0.53125	0.53125	0.21875	0.21875	0.5	0.5
	15M-50-1011	0.53125	0.53125	0.21875	0.21875	0.48438	0.48438
DCA 315	15M-50-1012	0.53125	0.51563	0.21875	0.21875	0.5	0.4375
	15M-50-1013	0.53125	0.53125	0.23438	0.25	0.46875	0.48438
DCA 316	15M-50-1014	0.5	0.53125	0.25	0.25	0.5	0.5
	15M-50-1015	0.53125	0.5625	0.21875	0.25	0.5	0.5
DCA 317	15M-50-1007	0.5	0.59375	0.25	0.25	0.5	0.5
	15M-50-1016	0.53125	0.53125	0.25	0.25	0.5	0.5
DCA 318	15M-50-1017	0.53125	0.5	0.25	0.25	0.5	0.5
	15M-50-1018	0.51563	0.54688	0.23438	0.25	0.51563	0.51563
DCA 319	15M-50-1019	0.54688	0.53125	0.26563	0.23438	0.53125	0.48438
	15M-50-1029	0.53125	0.53125	0.21875	0.21875	0.53125	0.53125
DCA 320	15M-50-1021	0.53125	0.53125	0.21875	0.21875	0.5	0.5
	15M-50-1022	0.53125	0.53125	0.1875	0.20313	0.5	0.5
DCA 321	15M-50-1023	0.53125	0.53125	0.21875	0.1875	0.5	0.5
	15M-50-1024	0.5625	0.53125	0.20313	0.20313	0.5	0.5
DCA 322	15M-50-1025	0.5	1.0625	0.1875	0.1875	0.5	0.5
	15M-50-1026	0.5	0.53125	0.1875	0.1875	0.5	0.5
DCA 323	15M-50-1027	0.5	0.53125	0.1875	0.1875	0.5	0.5
	15M-50-1028	0.53125	0.625	0.21875	0.21875	0.5	0.53125

	Average	0.2230	0.2194	8.4438	8.4313
	StdDev	0.0244	0.0214	0.2437	0.2312
	Range	0.0781	0.0625	0.7188	0.7188
	Min	0.1875	0.1875	8.1875	8.2188
	Max	0.2656	0.2500	8.9063	8.9375
	Inner	Dimension	Dimension	Dimension	Dimension
Magnet No.	Coil No.	L.E. "L"	R.E. "L"	L.E. "M"	R.E. "M"
DCA311	5M-50-1003	0.21875	0.21875	8.875	8.90625
	15M-50-1004	0.21875	0.21875		
DCA 312	15M-50-1005	0.21875	0.23438	8.90625	8.9375
	15M-50-1006	0.21875	0.21875	8.875	8.875
DCA 313	15M-50-1008	0.21875	0.1875	8.84375	8.875
	15M-50-1009	0.23438	0.21875	8.375	8.375
DCA 314	15M-50-1010	0.21875	0.21875	8.3125	8.375
	15M-50-1011	0.1875	0.21875	8.375	8.375
DCA 315	15M-50-1012	0.23438	0.21875	8.3125	8.3125
	15M-50-1013	0.21875	0.21875	8.375	8.375
DCA 316	15M-50-1014	0.25	0.25	8.3125	8.375
	15M-50-1015	0.25	0.25	8.375	8.375
DCA 317	15M-50-1007	0.25	0.25	8.4375	8.375
	15M-50-1016	0.25	0.25	8.375	8.40625
DCA 318	15M-50-1017	0.25	0.25	8.75	8.75
	15M-50-1018	0.25	0.23438	8.375	8.21875
DCA 319	15M-50-1019	0.26563	0.23438	8.875	8.375
	15M-50-1029	0.21875	0.21875	8.34375	8.34375
DCA 320	15M-50-1021	0.25	0.1875	8.21875	8.25
	15M-50-1022	0.1875	0.21875	8.1875	8.25
DCA 321	15M-50-1023	0.21875	0.21875	8.25	8.25
	15M-50-1024	0.1875	0.1875	8.25	8.28125
DCA 322	15M-50-1025	0.1875	0.1875	8.25	8.25
	15M-50-1026	0.1875	0.1875	8.25	8.3125
DCA 323	15M-50-1027	0.1875	0.1875	8.3125	8.28125
	15M-50-1028	0.21875	0.21875	8.28125	8.28125

Table 4 Outer Long Coil Measurements

	Average	594.9579	592.0431	586.1719	578.3185	1.4934	1.4129
	StdDev	0.1329	0.1374	0.1028	0.0931	0.0183	0.0141
	Range	0.6250	0.6563	0.5000	0.5000	0.0625	0.0625
	Min	594.5625	591.6250	585.8750	578.0000	1.4688	1.4063
	Max	595.1875	592.2813	586.3750	578.5000	1.5313	1.4688
	Outer	Dimension	Dimension	Dimension	Dimension	Dimension	Dimension
Magnet No.	Coil No.	"A"	"B"	"C"	"D"	L.E. "E"	R.E. "E"
DCA311	15M-50-2004	595.125	592.21875	586.3125578.343751.46875			1.40625
	15M-50-2005	594.90625	592	586.125	578.25	1.48438	1.40625
DCA 312	15M-50-2006	594.9375	592.0625586.15625		578.3125	1.5	1.40625
	15M-50-2007	594.90625	592.03125	586.15625	578.3125	1.51563	1.40625
DCA 313	15M-50-2008	594.96875	592.09375	586.15625	578.281251.46875		1.4375
	15M-50-2009	594.875	591.9375586.09375		578.21875	1.5	1.40625
DCA 314	15M-50-2010	594.90625	592.03125	586.0625	578.25	1.46875	1.40625
	15M-50-2011	594.937559	2.09375	586.09375	578.28125	1.5	1.40625
DCA 315	15M-50-2012	595	592.0625	586.125	578.281251.46875		1.42188
	15M-50-2013	594.937559	2.03125	586.0625	578.25	1.48438	1.40625
DCA 316	15M-50-2014	595.0625	592.125	586.15625	578.3125	1.53125	1.40625
	15M-50-2015	595.0625	592.125	586.15625	578.3125	1.53125	1.40625
DCA 317	15M-50-2016	595.0625	592.1875	586.25	578.3125	1.5	1.40625
	15M-50-2017	595.09375	592.1835	586.1875	578.375	1.5	1.42188
DCA 318	15M-50-2018	595.03125	592.03125	586.1875	578.3125	1.5	1.42188
	15M-50-2019	595	592.09375	586.09375	578.3125	1.46875	1.40625
DCA 319	15M-50-2020	595.187559	2.28125	586.3125	578.4375	1.5	1.40625
	15M-50-2021	595.1875	592.25	586.375	578.5	1.46875	1.40625
DCA 320	15M-50-2022	594.8125	591.875	586.125	578.34375	1.5	1.42188
	15M-50-2023	594.8125	591.875	586.1875	578.3125	1.5	1.42188
DCA 321	15M-50-2024	594.812559	1.90625	586.281255	78.375	1.5	1.40625
	15M-50-2025	594.875	591.9375	586.1875	578.375	1.46875	1.40625
DCA 322	15M-50-2026	594.90625	592	586.1875	578.375	1.5	1.40625
	15M-50-2027	594.9375	592	586.25	578.375	1.5	1.40625
DCA 323	15M-50-2028	595	592.0625	586.312557	8.46875	1.5	1.46875
	15M-50-2029	594.5625	591.625	585.875	578	1.5	1.40625

	Average	0.8720	0.9447	0.8894	0.8930	1.1166	1.1178
	StdDev	0.0545	0.0498	0.0216	0.0138	0.0351	0.0434
	Range	0.2344	0.1406	0.0938	0.0313	0.1250	0.1406
	Min	0.7969	0.8906	0.8750	0.8750	1.0625	1.0469
	Max	1.0313	1.0313	0.9688	0.9063	1.1875	1.1875
	Outer	Dimension	Dimension	Dimension	Dimension	Dimension	Dimension
Magnet No.	Coil No.	L.E. "F"	R.E. "F"	L.E. "G"	R.E. "G"	L.E. "H"	R.E. "H"
DCA311	15M-50-2004	0.875	0.9375	0.875	0.90625	1.09375	1.125
	15M-50-2005	0.84375	0.90625	0.875	0.90625	1.125	1.10938
DCA 312	15M-50-2006	0.92188	0.90625	0.875	0.875	1.125	1.125
	15M-50-2007	0.79688	0.92188	0.89063	0.89063	1.125	1.10938
DCA 313	15M-50-2008	0.84375	0.90625	0.89063	0.90625	1.125	1.125
	15M-50-2009	0.82813	0.90625	0.96875	0.90625	1.125	1.09375
DCA 314	15M-50-2010	0.875	0.9375	0.90625	0.90625	1.09375	1.09375
	15M-50-2011	0.84375	0.90625	0.90625	0.90625	1.125	1.09375
DCA 315	15M-50-2012	0.84375	0.9375	0.875	0.90625	1.10938	1.10938
	15M-50-2013	0.9375	1.03125	0.875	0.875	1.15625	1.15625
DCA 316	15M-50-2014	0.90625	1.03125	0.90625	0.90625	1.15625	1.15625
	15M-50-2015	0.90625	1.03125	0.90625	0.90625	1.15625	1.15625
DCA 317	15M-50-2016	0.9375	0.96875	0.875	0.90625	1.15625	1.15625
	15M-50-2017	0.89063	1.03125	0.92188	0.89063	1.15625	1.17188
DCA 318	15M-50-2018	1.03125	1.03125	0.89063	0.89063	1.1875	1.1875
	15M-50-2019	0.90625	0.90625	0.90625	0.875	1.125	1.1875
DCA 319	15M-50-2020	0.90625	0.96875	0.875	0.90625	1.15625	1.15625
	15M-50-2021	0.9375	1	0.875	0.875	1.125	1.1875
DCA 320	15M-50-2022	0.8125	0.89063	0.89063	0.89063	1.0625	1.0625
	15M-50-2023	0.875	0.9375	0.875	0.90625	1.0625	1.07813
DCA 321	15M-50-2024	0.8125	0.9375	0.875	0.89063	1.0625	1.04688
	15M-50-2025	0.82813	0.92188	0.89063	0.89063	1.07813	1.0625
DCA 322	15M-50-2026	0.8125	0.89063	0.875	0.875	1.09375	1.09375
	15M-50-2027	0.84375	0.90625	0.875	0.875	1.09375	1.09375
DCA 323	15M-50-2028	0.8125	0.90625	0.875	0.875	1.0625	1.0625
	15M-50-2029	0.84375	0.90625	0.875	0.875	1.09375	1.0625

	Average	8.3067	8.3450
	StdDev	0.0587	0.0496
	Range	0.1875	0.1875
	Min	8.1875	8.2500
	Max	8.3750	8.4375
	Outer	Dimension	Dimension
Magnet No.	Coil No.	L.E. "I"	R.E. "I"
DCA311	15M-50-2004	8.375	8.375
	15M-50-2005	8.3125	8.34375
DCA 312	15M-50-2006	8.375	8.375
	15M-50-2007	8.3125	8.3125
DCA 313	15M-50-2008	8.34375	8.34375
	15M-50-2009	8.34375	8.3125
DCA 314	15M-50-2010	8.34375	8.375
	15M-50-2011	8.375	8.375
DCA 315	15M-50-2012	8.3125	8.375
	15M-50-2013	8.375	8.375
DCA 316	15M-50-2014	8.3125	8.375
	15M-50-2015	8.3125	8.375
DCA 317	15M-50-2016	8.375	8.375
	15M-50-2017	8.3125	8.40625
DCA 318	15M-50-2018	8.3185	8.4375
	15M-50-2019	8.3125	8.375
DCA 319	15M-50-2020	8.34375	8.375
	15M-50-2021	8.375	8.40625
DCA 320	15M-50-2022	8.21875	8.25
	15M-50-2023	8.1875	8.28125
DCA 321	15M-50-2024	8.1875	8.25
	15M-50-2025	8.25	8.28125
DCA 322	15M-50-2026	8.25	8.3125
	15M-50-2027	8.25	8.3125
DCA 323	15M-50-2028	8.25	8.3125
	15M-50-2029	8.25	8.28125

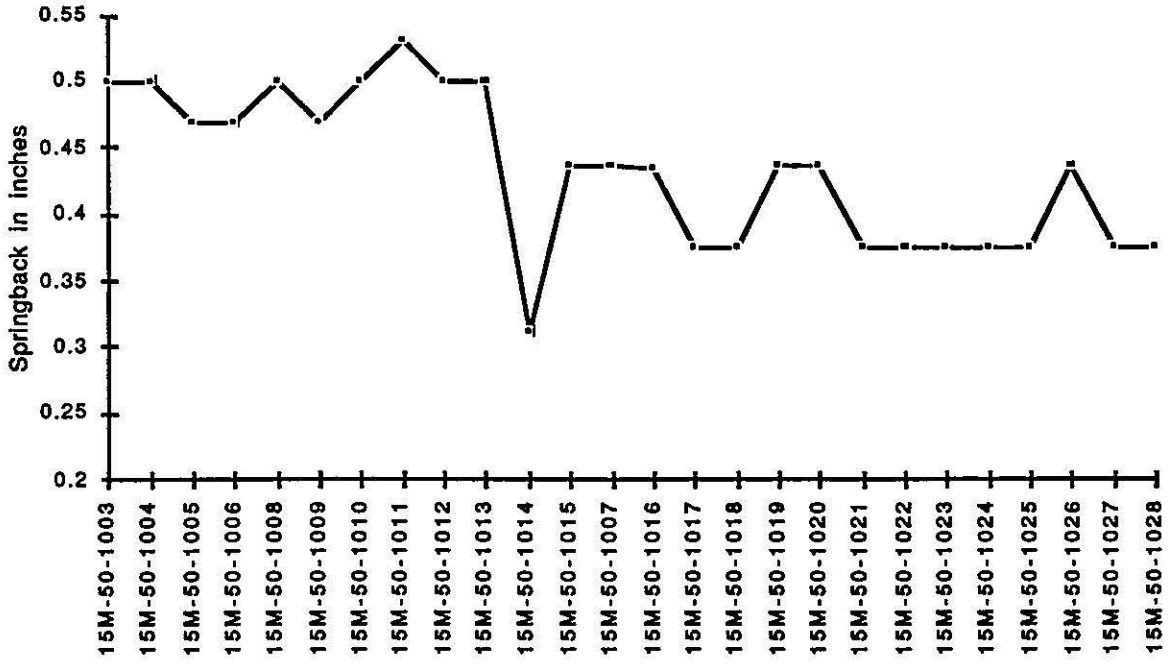

Figure 30. Inner coil Springback

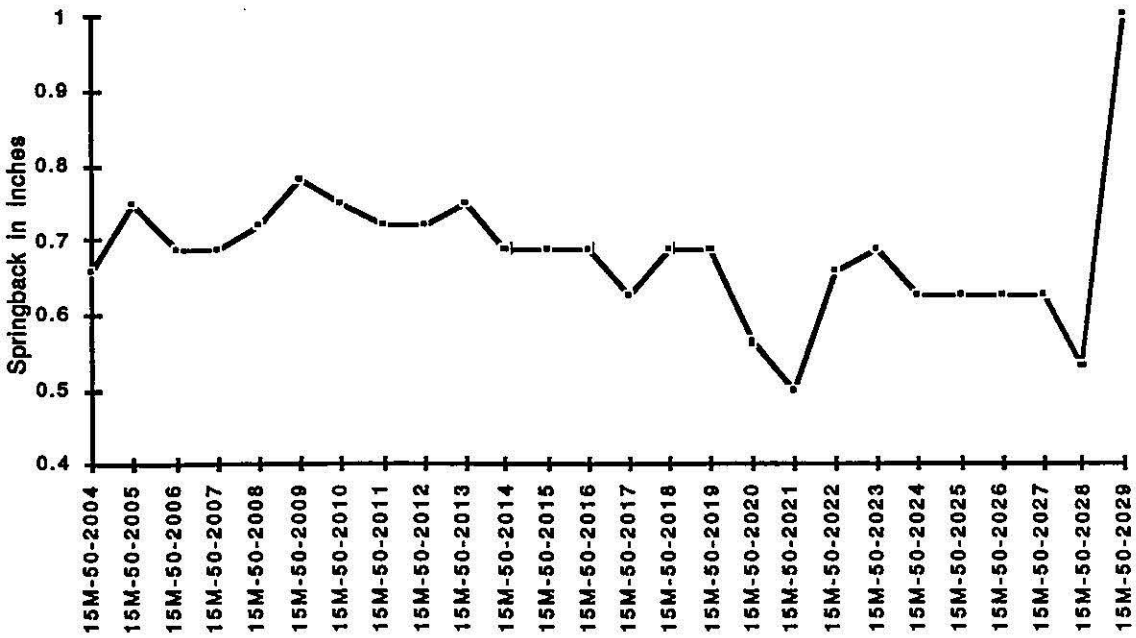

Figure 31 - Outer Coil Springback

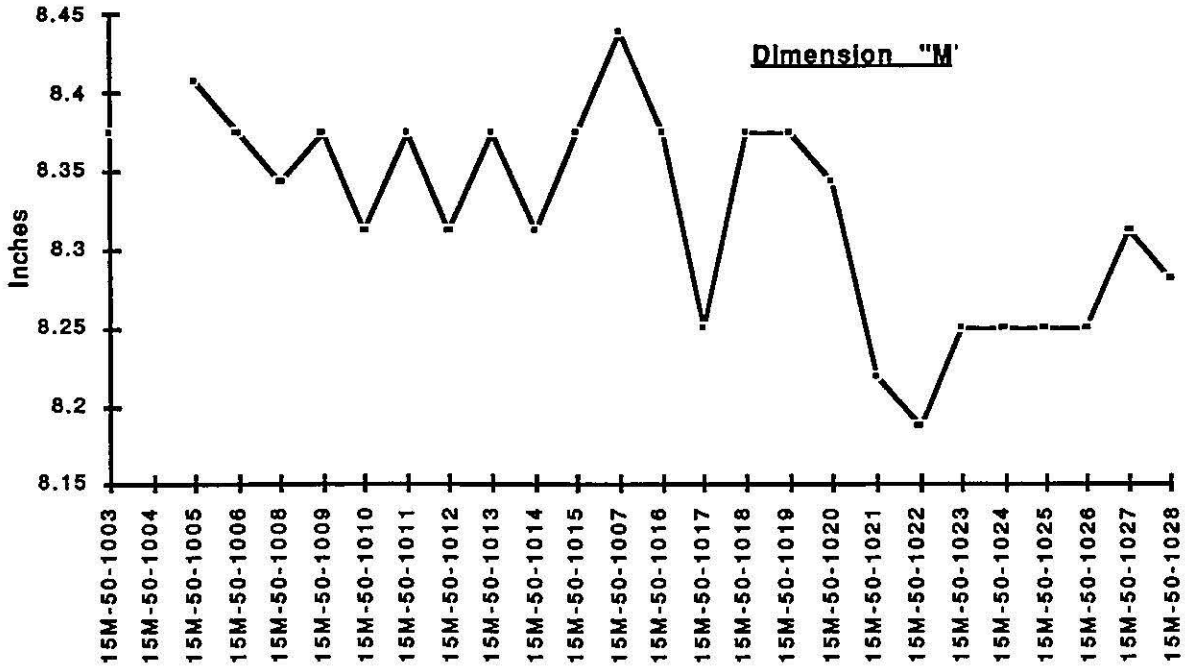

Figure 32 - Inner coil lead end lengths

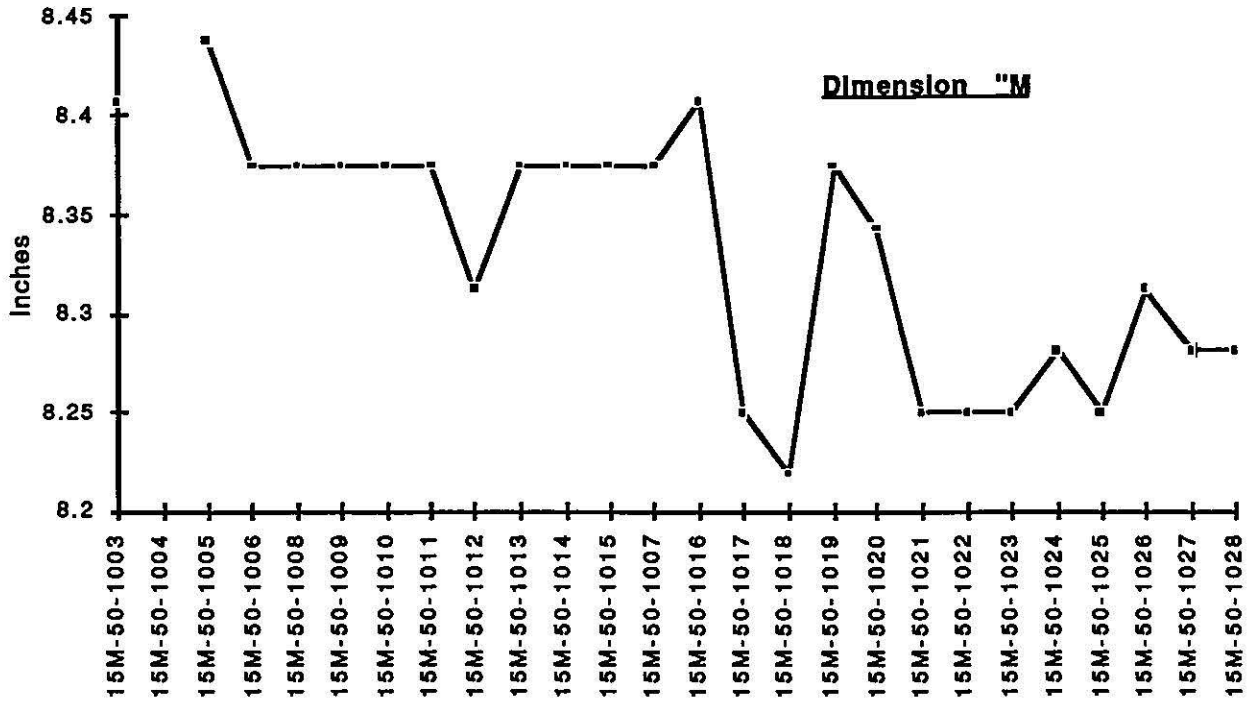

Figure 33 - Inner coil return end lengths

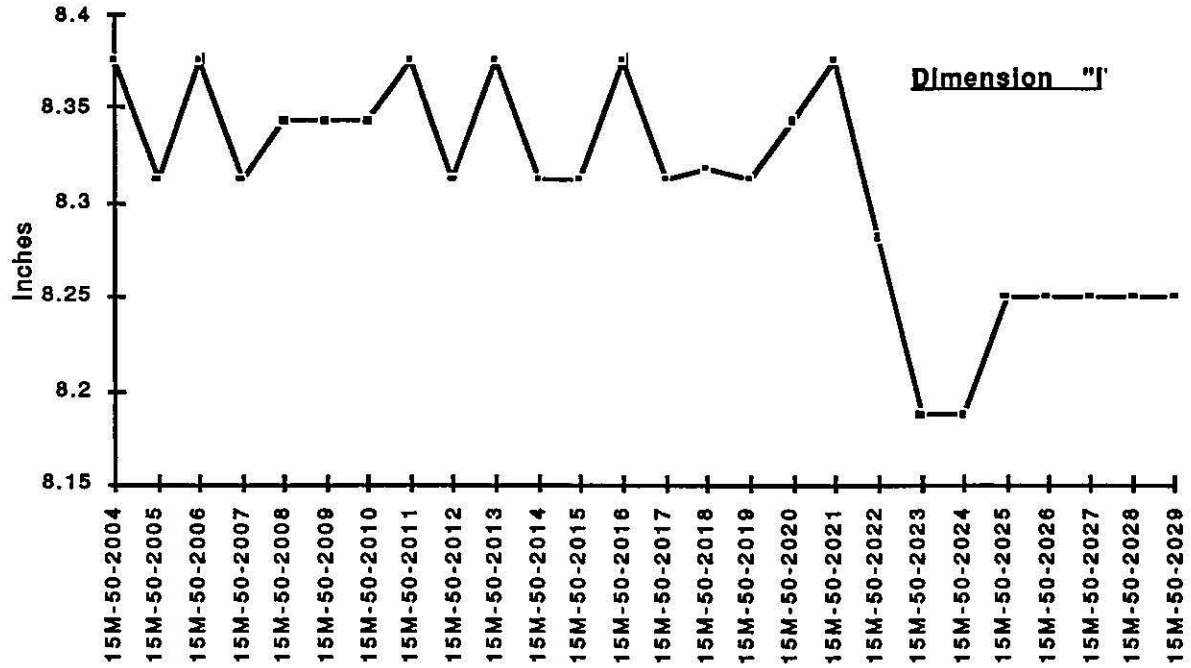

Figure 34 - Outer coil lead end lengths

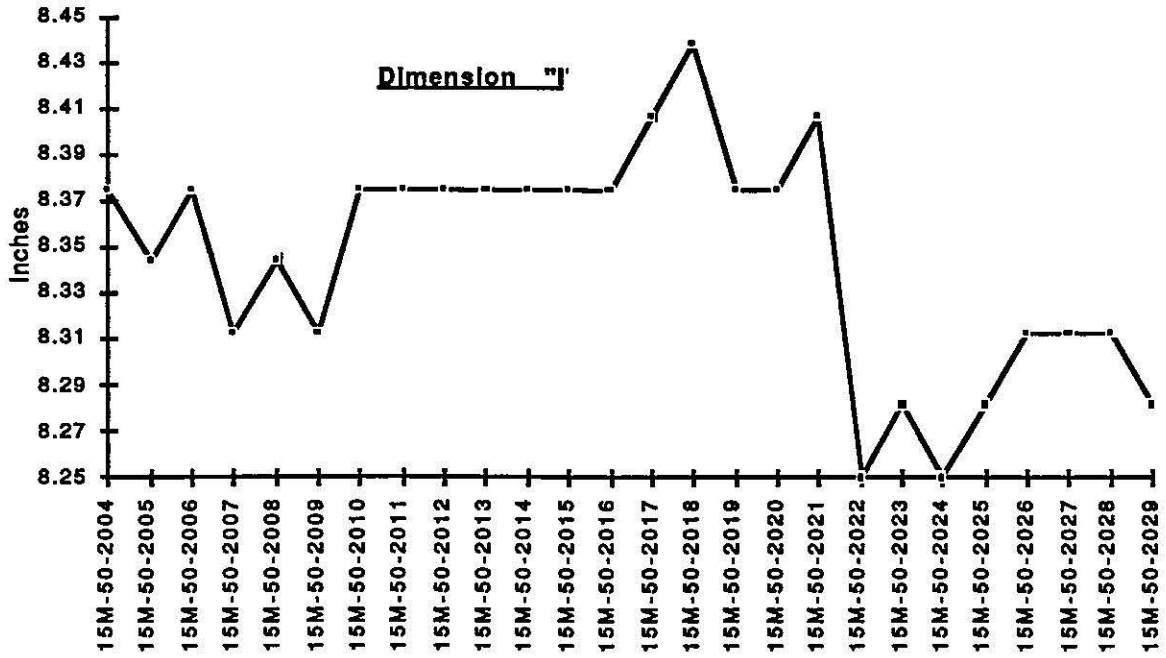

Figure 35 - Outer coil return end lengths