DCA312 Yoke Chevroning

TS-SSC 91-177
S. Delchamps
October 8, 1991

Description of the Incident: "At full pressure [7000 psi] before welding of the cold mass all of the 12 foot yoke packs shifted causing the press pressure to drop from 7000 psi to 6000 psi."[1]. (This occurred on August 26, 1991.)

Table 1 shows the sequence of pressures used in yoke welding. At each pressure, collar and shell strain gage readings are taken[2]. The actual pressures may differ slightly from these pressure, due to limitations in control of the press hydraulics. For example, the welding pressure of "6000 psi" is usually about 5800 psi.

Requested Pressure (psi)	
Line Pressure	
1000	
2000	
3000	
4000	
5000	
6000	
7000	<---- Chevroning Occurred Here
6000 (Weld)	

Table 1. Sequence of Pressures for Yoke Pressing/Welding (Before Welding)

After this incident, the press pressure was dumped and the cold mass was rolled out of the press. When the upper shell half[3] was removed, it was found that the upper and lower yoke laminations had "chevroned" as shown in Figure 1. The degree of the chevroning was not recorded quantitatively, but those present recall it as 5 to 7 laminations[4] as measured from the parting plane to the outer surface of the yoke laminations. The laminations tilted toward the west as shown in the figure.

---

[1]FNAL/SSC Discrepancy Report 188.

[2]Traveller 0102-ES-298351 Rev. B and John Shiloh, private communication.

[3]"Upper" and "lower" here refer to the orientation of the cold mass in the press. Actually, the upper shell half is the half which covers quadrants I and IV in the completed cold mass, since the ASST magnets have vertically split yoke packs.

[4]W. Robotham, private communication.

cc: R. Bossert, J. Carson, S. Gourlay, W. Koska, J. Missig, G. Pewitt, J. Strait, M. Wake

More Detailed Description of Events Leading up to the Incident: DCA312 had already been cycled to 7000 psi once before on the same day the incident occurred. During the first upward pressure cycle, all standard strain gauge measurements were performed and the pressure had been brought back down to 6000 psi for welding.

An electrical check performed at 6000 psi (actually 5800 psi) indicated that the upper and lower outer coil resistances had both dropped ~ 7 mOhms from their pre-pressing values. The physicist responsible for the pre-weld electrical sign-off[5] requested that another set of readings be taken. These readings were nearly identical to the first set. The pressure was brought to 5000 psi and an additional set of resistance measurements were performed at that pressure. The resistances had dropped even further. Finally, the pressure was returned to 0 psi. The resistances still showed the same shift from the previous 0 psi values. All of these values are shown in Table 2.

Quarter Coil	Upper Outer	Upper Inner	Lower Inner	Lower Outer
Pre-press 1 (0 psi) 8 / 26 / 91	1820	1089	1090	1817
Pre-Weld 1 (6000 psi)	1814	1086	1088	1810
Pre-Weld 2 (6000 psi)	1812	1085	1088	1809
Pre-Weld 3 (5000 psi)	1810	1084	1087	1807
Pre-press 2 (0 psi)	1811	1085	1088	1807
After Incident: In Press (0 psi) 8 / 26 / 91	1813	1087	1089	1810
After Incident: On Inspection Table (0 psi) 8 / 28 / 91	1817	1088	1090	1814

Table 2. Coil Resistances (mOhms) Before and After Chevroning Incident

The press operator was directed to go through the entire cycle of pressures and strain gauge readings again. It was during this second cycle that the incident occurred.

[5] S. Delchamps

Measurements Taken During the Incident: Both collar strain gauge and shell strain gauge measurements were taken as the yoking press pressure was raised. The first pressing values for the shell gauges were discarded, so that for these gauges we cannot compare the first and second pressing cycles. However, collar strain gauge data exist for both pressure cycles, and are shown in Figures 2a and 2b.

The triangles in the Figures 2a and 2b denote inner coil gages. It is seen that on the second pressing, where the chevroning took place, the inner coil stresses increase at the same rate as on the first pressing. However, they start and end at a lower pressure on the second pressing.

Perhaps of greater interest is that with the new higher packing fraction yoke packs (see "Proposed Solution" section below), the increase in inner coil stress during pressing is 425 psi and 625 psi greater than before in the lead and return end gage packs.[6]

The outer coil gauges show little change in stress on either the first or the second pressing; one of them (A115 in the lead end pack) shows an odd double-valued behavior.

---

[6]J. Strait, private communication.

Measurements Taken After the Incident: The collared coil assembly was inspected following the chevroning incident. First, the upper yoke packs were removed, and the collared coil assembly was lifted out of the lower yoke packs and placed on a staging table.

Magnet Length: The length of the assembly was measured, from outside to outside and inside to inside of the lead and return end clamps. The pre- and post-incident values are shown in Table 4. At the time these measurements were made, the measuring technique was still being perfected. In fact, it is difficult to know whether to trust even the tenths of inches here. Since the return end clamp actually slid toward the return end by ~.1", both of the "after incident" values are should be ~.1" larger than the "before incident" corresponding values. However, the outside to outside measurement is actually smaller after the incident.

Measurement	Before Incident	After Incident
Inside to Inside Surface	577.5 inches	577.6 inches
Outside to Outside Surface	596.5 inches	596.1 inches

Table 4. Coil Length Measurements Before and After Yoke Chevroning Incident

Coil Diameter and Size: Some superficial scratching and bending of the collar laminations was observed near the return end of the coil. Table 5 shows collar size measurements before and after the incident averaged over the entire length of the coil. The collar diameter is measured at four azimuthal positions, labeled A - D, and and shown in Figure 3. Two other size measurements, labeled as E and F, are also shown in the figure and given in Table 5. (The full set of measurements are included as an appendix to this report.)

Measurement Position (See Figure 3)	Before Incident (inches)	After Incident (inches)
A	5.353 ± .001	5.354 ± .004
B	5.320 ± .001	5.320 ± .001
C	5.317 ± .001	5.319 ± .003
D	5.319 ± .001	5.320 ± .001
E	3.770 ± .001	3.775 ± .004
F	3.770 ± .001	3.773 ± .003

Table 5. Collar Diameters Before and After Yoke Chevroning Incident

Measurements E and F may have changed significantly in some parts of the collared coil assembly. This change could in principle be due to the chevroning incident. The post-incident r.m.s. values are larger in some cases than the pre-incident values. This may be due to the "rushed" nature of the post-incident measurements.

Electrical Measurements: Electrical measurements were made on the collared coil assembly while it was on the assembly table. No change greater than 4 mOhms was seen in any quarter coil from the readings taken just after the chevroning incident. (See last row of Table 2.) All quench protection heater strips are still functioning properly at the date of this memo. Hi-pot tests have all been successful also.

End Clamp Position, Diameter, "Closure": The return end clamp was found to have slid ~.1" toward the return end of the collared coil assembly. Both the lead and return end caps were removed, and the relative positions of the G10 CR insulator surfaces and the ends of the aluminum end clamp cylinders were measured ("closure" measurement, see Figure 4). The diameters of the end clamp cylinders were measured as well. None of these dimensions was found to have changed by more than 2 mils from the pre-incident values. (Unfortunately, the raw post-incident data have been lost.)

The lead end clamp assembly was apparently not damaged. At the return end, the green putty used to make the saddle surfaces flush with the collet insulator surface cracked when the return end clamp slid. This green putty was repaired. Both end caps were re-
welded. No attempt was made to move the return end clamp back to its original clamped position.

Collar Strain Gage: Measurements taken on August 30, 1991, show all collar strain gages are functioning normally.

Proposed Solution to the Chevroning Problem: The proposed solution[7] to the chevroning problem, which is evidently caused by a lack of stability of the yoke assembly under pressure, is shown in Figure 5. First, a higher packing fraction (99%; the original value was 98%[8]) will be used in the standard packs. Second, epoxy reinforced "monolithic" packs will be placed not only at the ends of the yoke assembly but at three positions along the magnet to give better support.

This approach has already been used in the assembly of the DCA312 and DCA313 cold masses.

---

[7] M. Gordon, "50 mm Dipole Revised Yoke Assembly", TS-SSC 91-169, 9/3/91.

[8] M. Gordon and J. Strait, "Axial Compliance and Packing Fraction of the Yoke for the 50 mm SSC Collider Dipole Magnet", TS-SSC 91-143, 7/22/91.

Acknowlegements

I would like to acknowledge the help of the following people: John Shiloh and Bill Robotham for general procedural information and mechanical measurement data, Rick Kunzelmann and Bob Tuskey for shell strain gauge information, Mike Winters and his group for help with collar strain gauge data, Al Fogarty with discrepancy reports, Scott Lockwood Ken Hebert and Steve Christiansen for help with end clamp measurements.

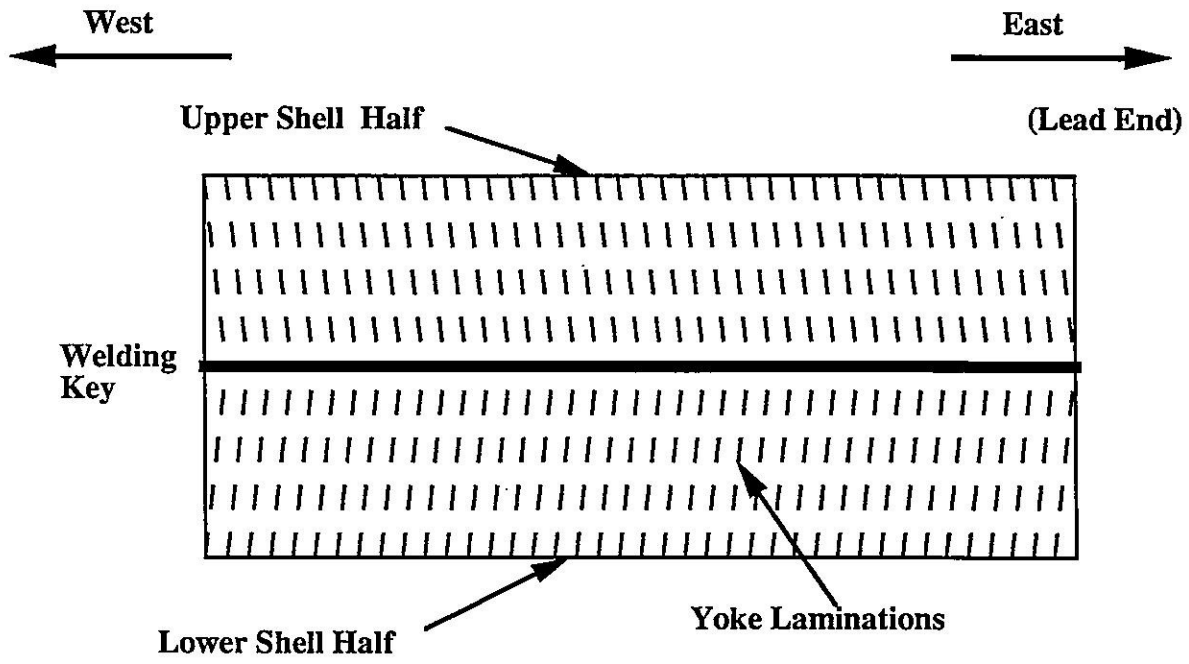

Figure 1. Chevroning of Yoke Laminations in DCA312

FIGURE 2a

DCA 312 LEAD END YOKE READINGS

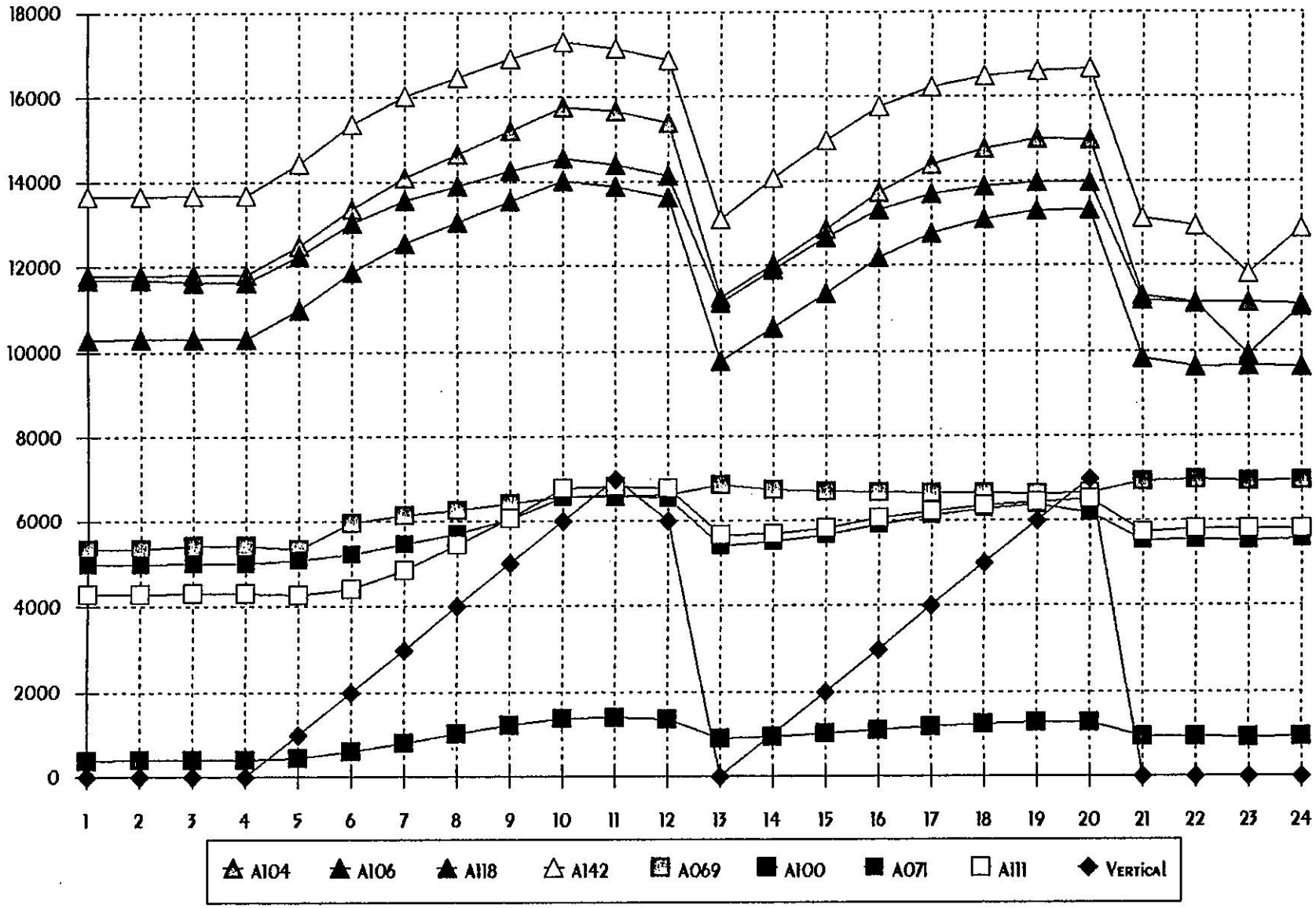

FIGURE 26

DCA 312 RETURN END YOKE READINGS

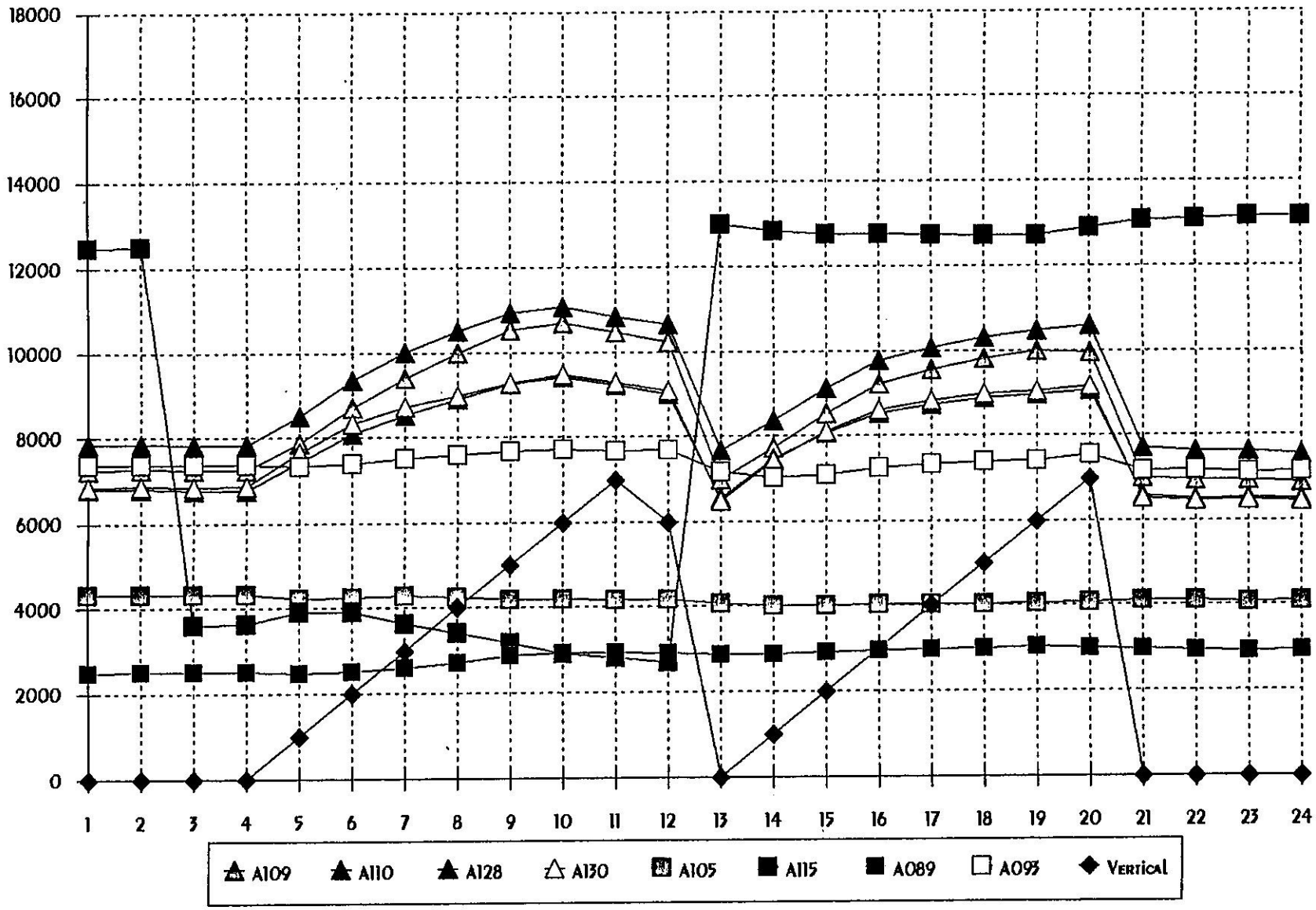

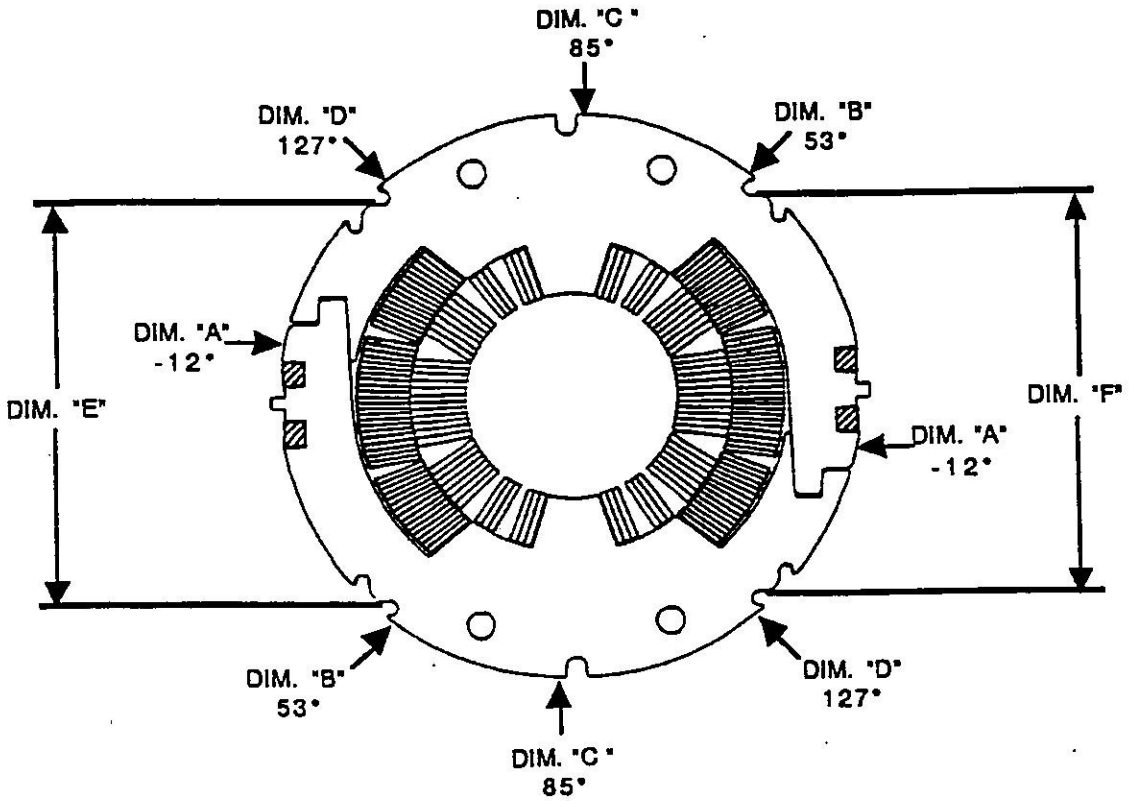

Figure 3. Collar Diameter and Height at Alignment Feature Measurements

312

2.19 Before removing End Squeezer Assembly, measure the distance between the outer end of each Insulator and the End Can, using a Depth Gauge.

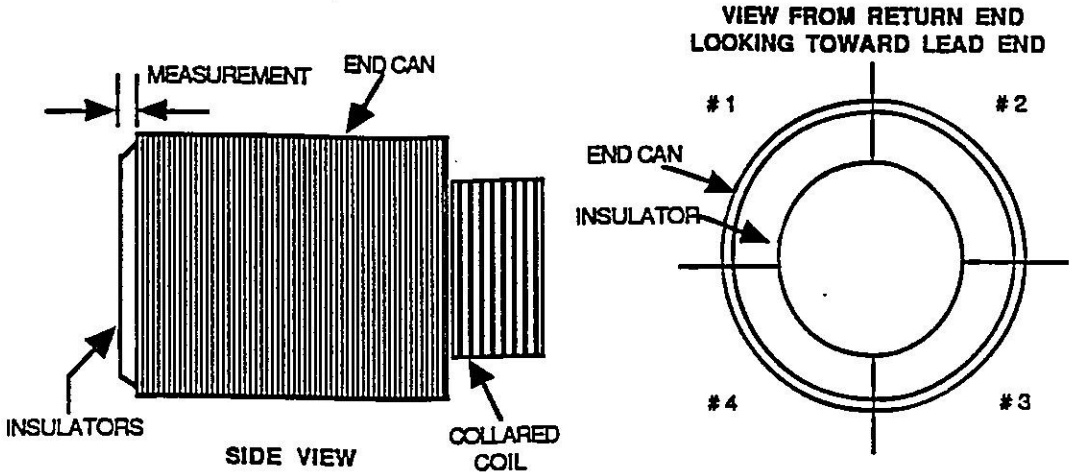

Quadrant #1 .038 Quadrant #2 .043

Quadrant #3 .045 Quadrant #4 .039

NOTE: IF THE MEASUREMENT OF ANY QUADRANT IS GREATER THAN 40 MILS, STOP AND CONSULT RESPONSIBLE AUTHORITY/PHYSICIST.

S. Lockwood
Technician(s)

8-16-91
Date

Figure 4. End Clamp "Closure" Measurement

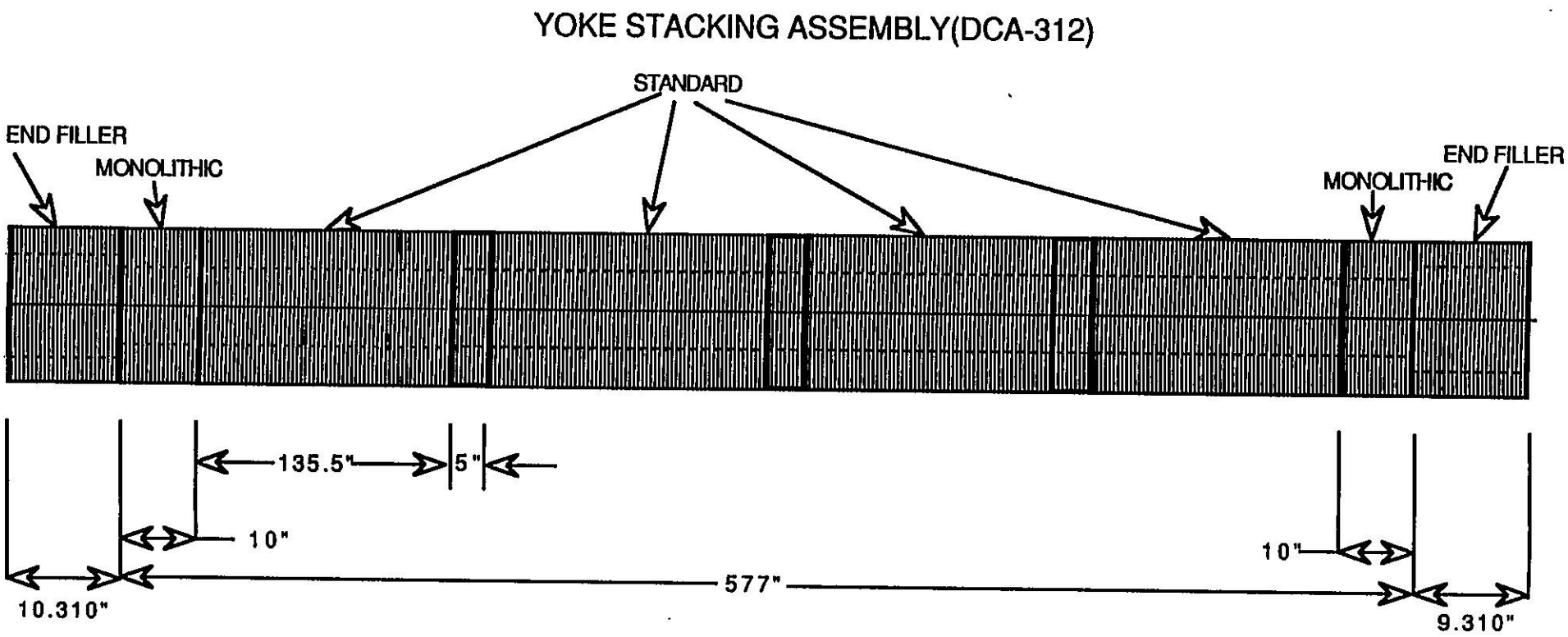

Figure 5. Proposed Solution to Yoke Lamination Chevroning Problem (M. Gordon)