Thermal Contraction of Modified Stycast End Parts and Molded EM-7302[1]

TS-SSC 91-110
S. Delchamps
June 5, 1991

Abstract: Micro-Cut Engineering[2] has supplied us with several sets of molded inner coil end parts. Each set consists of a key, a spacer, and a saddle. (These are return end parts.) The material is compression-molded **Stycast**[3] 2850 FT resin, an alumina filled epoxy resin, with 1/8" glass fibers 10% by volume added, cured with curing agent 24 LV. The integrated thermal contraction between 300K and liquid nitrogen temperature of these parts is found to be **-6±1 mils per inch**, somewhat larger than the previously measured integrated thermal contraction of standard Stycast.

Data are also presented for the thermal contraction of a sample of **EM-7302**, a glass fiber filled epoxy, also compression molded by Micro-cut Engineering. The integrated thermal contraction of this material is found to be **-7±2 mils per inch**, significantly greater than the previously measured value from MDL.

---

[1]I wish to thank Bill Boroski for the use of his laboratory and technical staff during these measurements. Bob Tuskey assisted in the setup and measuring process.

[2]Micro-Cut Engineering, 1534 Burgundy Parkway, Streamwood, IL 60107, Telephone: (708) 837-7001, FAX 837-0681.

[3]S. Delchamps, "Preliminary Report on Stycast 2850 FT," TS-SSC 90-053, September, 1990.

Distribution: R. Bossert, J. Carson, S. Gourlay, W. Koska, G. Pewitt, J. Strait, M. Wake

Modified Stycast End Parts: Table 1 shows the dimensions of the key, spacer, and saddle at room temperature, and after immersion in a pool of liquid nitrogen until stable bubbling[4] was achieved.

The dimensions were taken with a 1" blade micrometer. One of the blades was rounded, to better fit into curved surface. The key was measured first. Two room temperature measurements were made at positions 1 and 2 (see Figure 1), to check the precision of the micrometer measurements. The measurements agree to within less than one mil.

At least 2 nitrogen immersions were made in an attempt to measure positions 1 and 2 on the key and saddle, and position 1 on the spacer, following immersion. The large spread in values at positions 1 and 2 on the key reflects a period of learning to withdraw the part from the liquid nitrogen bath and measure it before frost had time to form on the surface.

Part	Temperature	Measurement 1 (inches)	Position 2 (inches)	$\Delta l / l \times 1000$ (max)
Key	300 K	.499	.496	6.0 ± 1 mils per inch
	"	.4995	.496	
	77 K	.497	.495	
	"	.497	.4955	
	"	.498	.493	
	"	.496	.493	
Saddle	300 K	.492	.489	6.1 ±1 mils per inch
	77 K	.490	.487	
	"	.4895	.486	
Spacer	300 K	.479		6.3 ± 1 mils per inch
	77 K	.476		
	"	.476		

Table 1. Size Measurements of Stycast Parts at 300 K, and Following Immersion in Liquid Nitrogen, and Maximal Integrated Thermal Contraction

[4]We waited until the bubbles coming up from the piece were not growing more or less dense. The pieces were too large to achieve perfect thermal equilibrium in a reasonable amount of time.

It was in general difficult to get the micrometer blades into position before the piece began to be covered with frost , which tends to add to the measured size of the piece. There is also some systematic error due to the piece having some time to warm up before the micrometer blades could be placed. For these reasons, only the maximum apparent integrated unit thermal contractions are reported in the last column of the table. These should be least affected by the frost and warm-up.

The uncertainties on these numbers are probably at least ± 1 mils per inch. Nevertheless, the maximal measured contractions for the key, spacer, and saddle are in good agreement.

EM-7302 Block: The block used for these measurements is shown in Figure 2. Various dimensions are shown, including positions 1 and 2, used to assess thermal contraction. As with the end parts above, the part was first measured at room temperature, then immersed in a bath of liquid nitrogen until the bubbling became stable, then removed and measured again.

Table 2 shows the measurements made. Four micrometer measurements were made at each of the two positions, and a fairly large spread in values is seen. These measurements were more difficult than the end part measurements because of the detailed shape of the piece of material, and this probably explains the scatter of values.

The last row of the table gives the integrated thermal contractions at the two positions, which are in agreement with each other. The uncertainty given is simply the r.m.s. of the four measurements made.

Temperature	**Position 1**	**Position 2**
300 K	1.261	1.965
77 K	1.252	1.948
"	1.254	1.952
"	1.252	1.946
"	1.250	1.952
Δl / l x 1000 (average)	-7.1 ± 1.6 mils per inch	7.6 ± 1.5 mils per inch

Table 2. Size Measurements and Integrated Thermal Contraction for EM-7302 Glass Fiber Filled Epoxy

After these measurements were made, the piece of material in Figure 2 was cut into several pieces to facilitate further measurements. When this was done, voids in the material where the resin had not filled the glass fibers were exposed. (See sketch at bottom of Figure 2.)

Conclusions: Based on these studies, it would appear that the glass fiber filled Stycast material has integrated thermal contraction between room temperature and liquid nitrogen temperature of -6 ± 1 mil per inch. This is in somewhat larger than the value of about -4.3 mils per inch (300 K to 90 K) obtained in the Materials Design Laboratory (MDL) with standard Stycast 2850 FT.[5] The 1/8" glass fibers were added to the Stycast resin to increase the strength of the parts and to add bulk to the material for ease of molding.[6] It is surprising that the glass-filled Stycast has a larger integrated thermal contraction than the "neat" Stycast.

The EM-7302 material appears to have integrated thermal contraction between room temperature and liquid nitrogen temperature of -7 ± 2 mils per inch. This value is significantly higher than the value obtained in MDL, -2.9 mils per inch (300 K to 90 K.) This may be due to the presence of voids in the pieces molded by Micro-Cut. (The piece of material used in the dilatometer tests was molded by BP, the manufacturer of the material, and had a much more uniform appearance.) However, the systematic errors in the present measurement are probably larger than in the MDL measurement.

---

[5]S. Delchamps, "Report on Thermal Contraction of Some Materials Including Stycast 2850 FT," TS-SSC 90-060, September, 1990.

[6]Pat Jaguish, Micro-Cut Engineering, private communication.

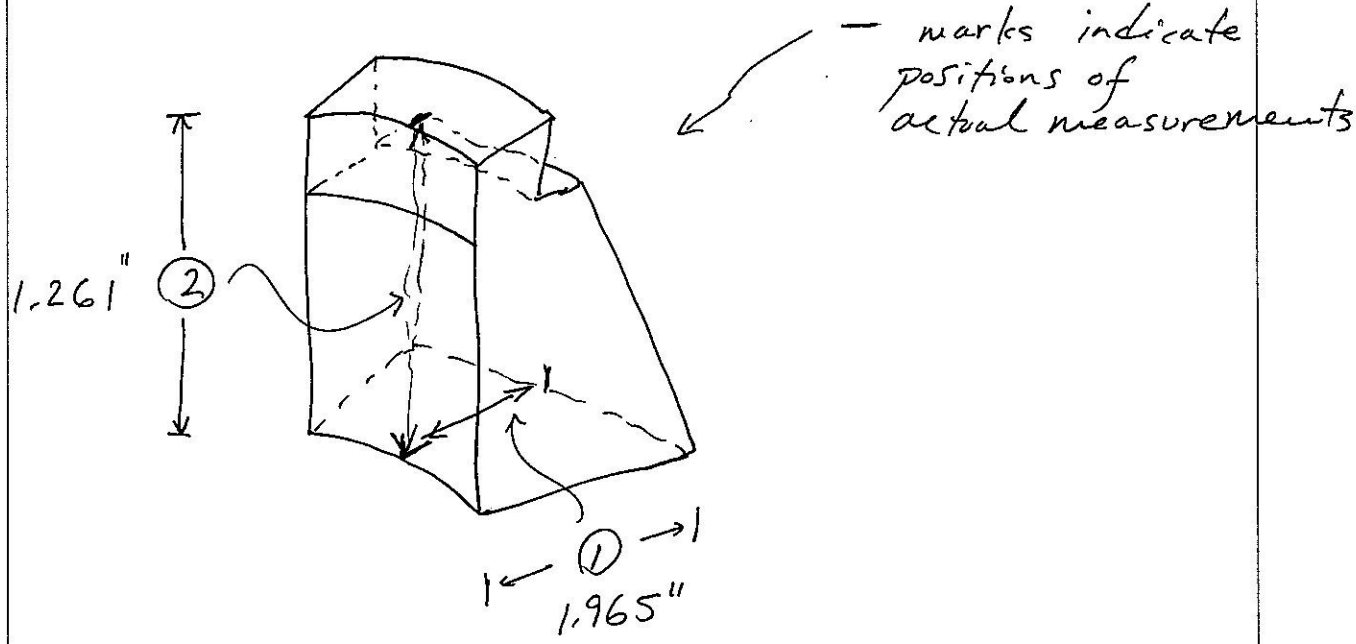

Figure 2. EM-7302 Sample (Micro-Cut Engineering)

Showing Measurement Positions 1 and 2 (see Table 2)

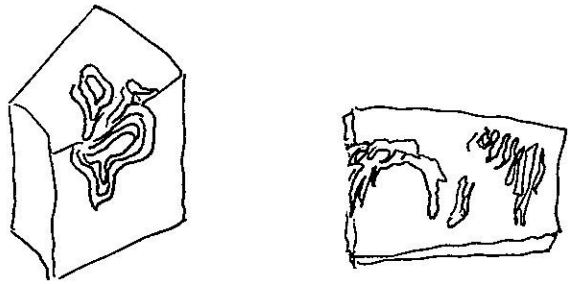

Sketches of pieces of EM7302 showing voids in resin fill.

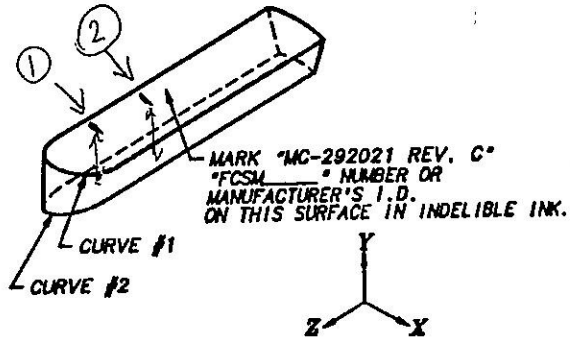

Key

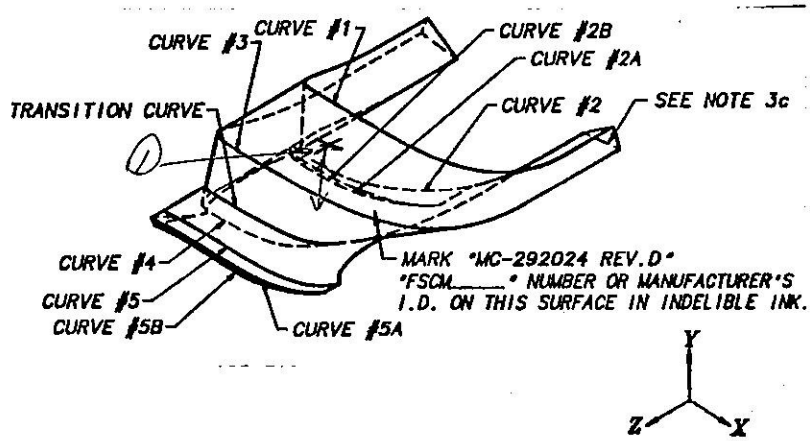

Spacer

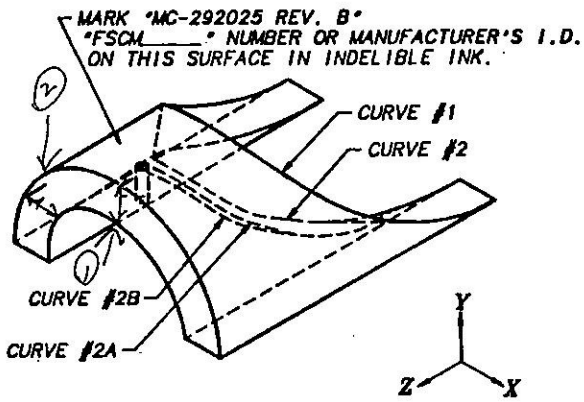

Saddle

Figure 1. Key, Spacer, and Saddle Showing Positions Measured (Thicknesses)