TS-SSC 91-215
Wayne Koska
11-7-91

Measurement of End Plate Warp on DCA310

The end force applied to the magnet through the return end bullets increases substantially during the welding of the extension tube to the end plate. It is believed that the increase is due to a warping of the end plate caused by the shrinkage of the weld which is deposited on its outside edge. Previous measurements indicate that to obtain the observed increase in end force the plate must warp about 25 mils[1]. Prior to removing DCA310 from ICB an attempt was made to measure this warpage. A flat gauge block was laid across the return end plate and was oriented in the vertical and horizontal directions. A feeler gauge was then slipped beneath the block at its center to measure the maximum deflection of the plate. The gauge block was placed against the bullet bushing screws when oriented in the vertical direction (about 1.5 inches from the center of the plate) and against the compensating gauge block when in the horizontal direction (about 1.65 inches from the center of the plate). The measured gap between block and plate in the horizontal direction was 2 mils. The plate appeared to be slightly bowed outerward in the vertical direction. Similar results were obtained at the lead end, however the maximum amount of warpage may have been slightly larger (2-5 mils) in the horizontal direction. This is much less than the expected value of 25 mils and is not understood. (The measurements were made from the side of the gauge block opposite the center of the plate. The width of the gauge block was 3/8".)

Prior to retracting the bullet gauges two dial indicators were positioned to measure the motion of the end plate. The tips of the indicators rested against the bullet gauge compensator blocks about 1.5 inches above and below the center of the plate. The bullets were backed off in increments of 1/8 turn and dial indicator and force readings were taken. The thread pitch of the screws was 16 turns per inch. The average force of the three working gauges (gauge 1 was shorted) as a function of the bushing screw displacement is shown in figure 1. The deflection of the plate, obtained by averaging the two dial indicators, is also shown. Note that the bullets completely unload between 1/2 and 5/8 turn. This is consistent with previous results. The slope on unloading appears to be steeper than that found for DCA311 and consistent with the slope on loading for DCA311 and DCA312[2].

The additional deflection of the end plate after unloading the bullets was about 5 mils. A measurement at the lead end, with the dial indicator tips positioned horizontally about 2.2 inches from the center of the plate, showed the same additional deflection of 5 mils after the set screws were unloaded. This is consistent with expectation[1].

In conclusion, there appears to be a contradiction in these results in that although the bushing screws had to be backed out approximately 20 mils to achieve the pre-weld end force of about 200 lbs, no evidence of plate warpage was evident which could explain the increase in force due to welding.

I would like to acknowledge S. Lockwood and A. Wendt, who took this data.

[1] J. Strait, DCA311 and DCA312 Return End Coil Spring Rates, TS-SSC 91-194, 10/7/91.

[2] J. Strait, DCA311 End Loads from End Bell Welding, TS-SSC 91-198, 10/15/91

Distribution:

R. Bossert
J. Carson
S. Delchamps
W. Higinbotham
J. Strait
G. Tassotto
M. Wake

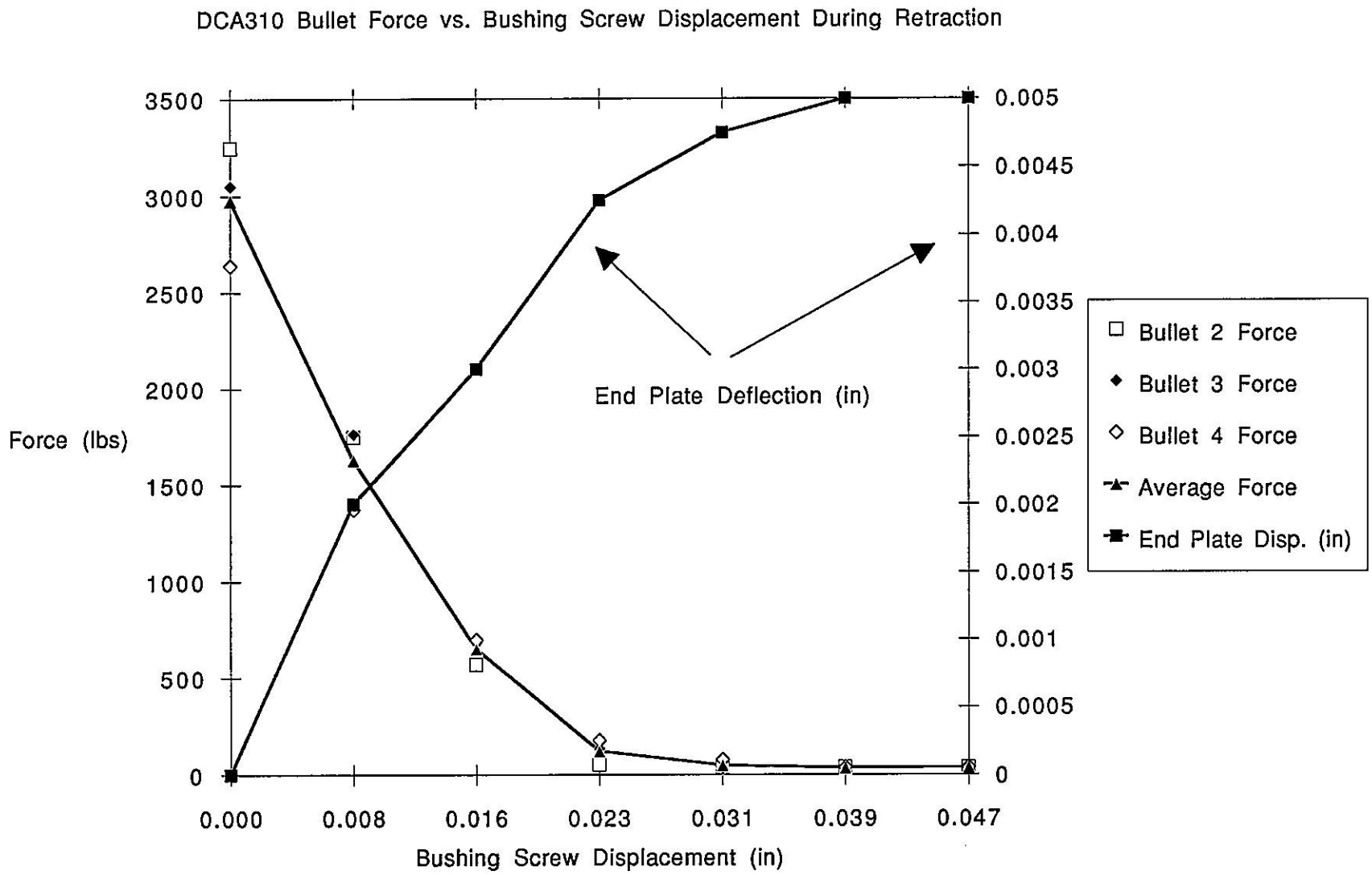
DCA310 Bullet Force vs. Bushing Screw Displacement During Retraction
Force (lbs)
3500
3000
2500
2000
1500
1000
500
0
0.005
0.0045
0.004
0.0035
0.003
0.0025
0.002
0.0015
0.001
0.0005
0
0.000
0.008
0.016
0.023
0.031
0.039
0.047
Bushing Screw Displacement (in)
End Plate Deflection (in)
Bullet 2 Force
Bullet 3 Force
Bullet 4 Force
Average Force
End Plate Disp. (in)

10/25/91
Andrew Wendt

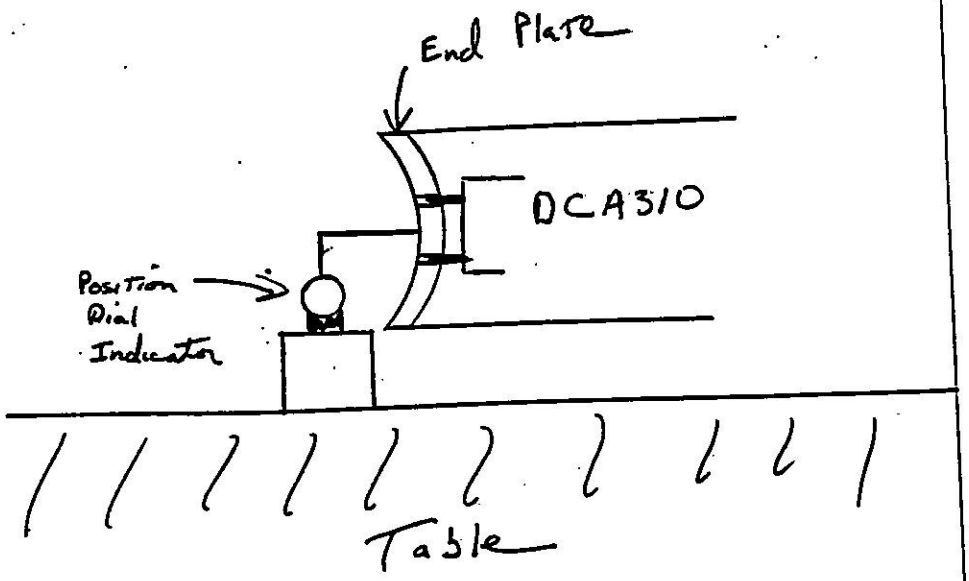

L.E.

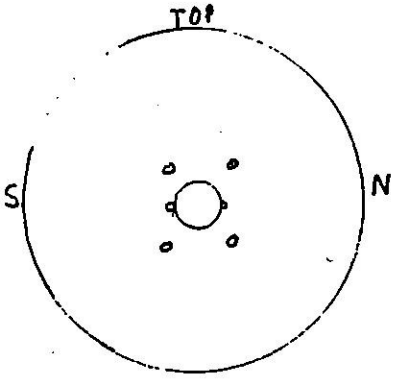

VIEW LOOKING TOWARDS RETURN END

1.
2.
3.
4.

R.E. L.E

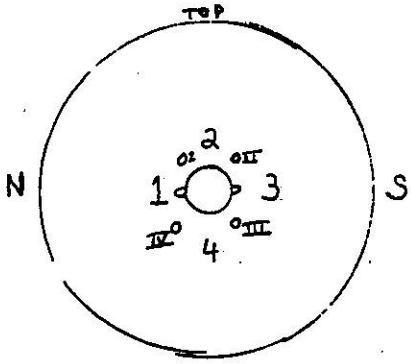

VIEW LOOKING TOWARDS LEAD END

1. PARALLEL TO GUAGE BLOCK
2. .0025" CONCAVE
3. PARALLEL TO GUAGE BLOCK
4. .005" CONCAVE

LEAD END SET SCREWS.

		SOUTH	NORTH
1ST	1/8 TURN	+.002	+.0025
2ND	1/8	+.004	+.004
3RD	1/8	+.0045	+.0045
4TH	1/8	+.005	+.005
5TH	1/8	+.005	+.005
6TH	1/8	+.005	+.005.
7TH	1/8		
8TH	1/8		

DWendt S. Rockwood 10-28-91

October 18, 1991

Please make the following set of measurements on DCA310:

1) Place a steel straight edge across the end plate and use a feeler gauge to determine what the gap between the straight edge and the center of the plate is. Do this with the straight edge pointed up and down and across the plate.

Gap with vertical straight edge: * * SEE PAGE 4 OF 4

Gap with horizontal straight edge: *

Mount a gauge on the table and place its point at the center of the plate. Adjust it so that it can measure position changes in either direction.

Position gauge reading: U 0" / L 0"

Take a reading of the bullet gauges:

Bullet 1 557

Bullet 2 3247

Bullet 3 3050

Bullet 4 2641

attach to file copy

Turn back the 4 bullet bushing screws 1/8 turn.

Position gauge reading: -.002" / -.002"

Take a reading of the bullet gauges:

Bullet 1 1212

Bullet 2 1750

Bullet 3 1766

Bullet 4 1374

Turn back the 4 bullet bushing screws another 1/8 turn.

Position gauge reading: -.003"/-.003"

Take a reading of the bullet gauges:

Bullet 1 1105

Bullet 2 569

Bullet 3 682

Bullet 4 697

Turn back the 4 bullet bushing screws another 1/8 turn.

Position gauge reading: -0.045"/-.004"

Take a reading of the bullet gauges:

Bullet 1 606

Bullet 2 53

Bullet 3 135

Bullet 4 178

Turn back the 4 bullet bushing screws another 1/8 turn.

Position gauge reading: -.005"/-.0045"

Take a reading of the bullet gauges:

Bullet 1 161

Bullet 2 38

Bullet 3 33

Bullet 4 79

Turn back the 4 bullet bushing screws another 1/8 turn.

Position gauge reading: -.005" / -.005"

Take a reading of the bullet gauges:

Bullet 1 4

Bullet 2 38

Bullet 3 34

Bullet 4 38

Turn back the 4 bullet bushing screws another 1/8 turn.

Position gauge reading: -.005" / -.005"

Take a reading of the bullet gauges:

Bullet 1 5

Bullet 2 39

Bullet 3 35

Bullet 4 38

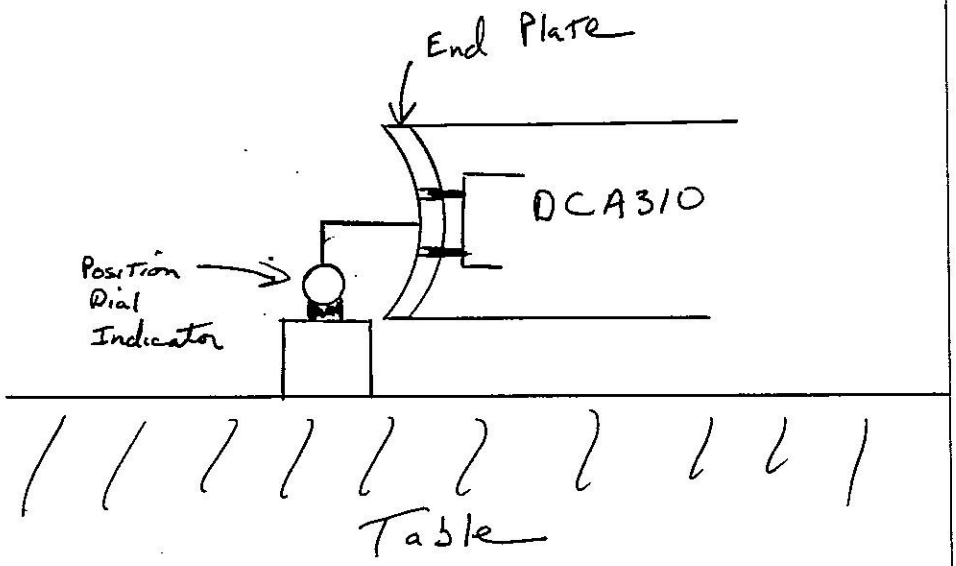

L.E.

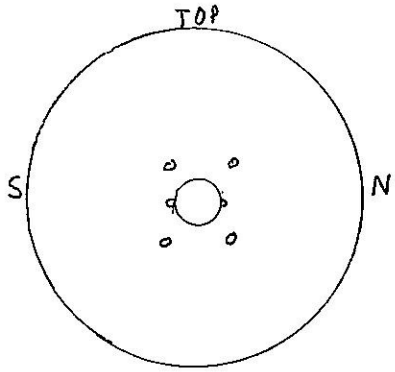

VIEW LOOKING TOWARDS RETURN END

1.
2.
3.
4.

R.E.

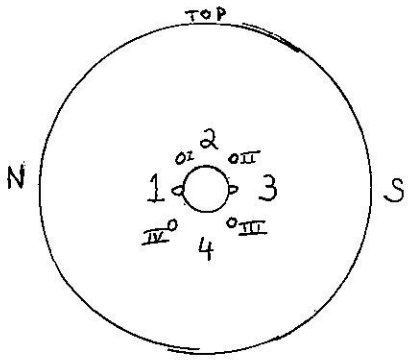

VIEW LOOKING TOWARDS LEAD END

1. ∅.001" CONVEX
2. .002" CONCAVE
3. ∅.001" CONVEX
4. .002" CONCAVE

S. Lockwood + A. Wend state that width of gauge block was 3/8".

WK, 11-8-91