TS-SSC 91-084
May 30, 1991
Wayne Koska

Magnet DSA325 has developed a short between turns 18 and 19 at the lead end. This was first discovered when the collared coil harmonics data was analyzed by Steve Delchamps. He observed that the skew quadrupole was very large and negative (≈ -12 units) and that the sextupole was ≈ 8 units larger than in previous magnets. Several other harmonics were also anomalous. Inductance measurements at 100Hz indicated a discrepancy between the lower inner and upper inner coils of 0.010 ± 0.001mH existed. Resistance measurements (D.C.) also showed a difference of 2.2 mΩ between the two coils. The last set of resistance measurements recorded in the traveler, dated 4-17-91 and in the column reserved for "post-return end clamp installation" electrical checkout did not indicate a short existed. This leads to the conclusion that the short, which is resistive, developed over time.

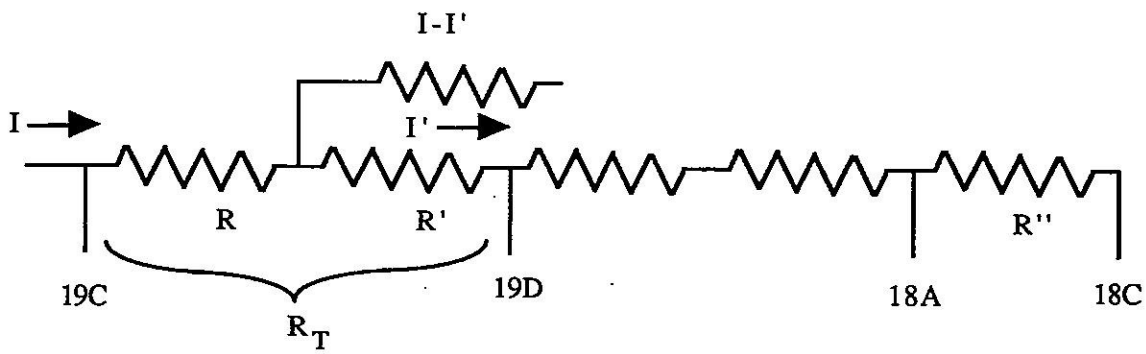

If we model the short as shown in the diagram, we can determine its approximate position as follows:

1) $R'' I' = R''_m I \Rightarrow I' = \frac{R''_m I}{R''}$

where R'' is the resistance between taps 18A and 18C, R''_m is the resistance as measured with the Valhalla and I' is the actual current flowing through this segment. (Note: The Valhalla measures a voltage drop and translates it to resistance by dividing by its current settings.)

Since

2) $IR + I' R' = I R_m$

where R_m is the measured resistance between taps 19C and 19D, and

3) $R + R' = R_T$

where R_T is the actual resistance between taps 19C and 19D, then substituting for R in 2) we obtain

4) $I\left(R_T - R'\right) + I' R' = I R_m$.

Substituting 1) into 4) gives:

5) $$I\left(R_T - R'\right) + I\frac{R''_m}{R''} R' = I R_m \Rightarrow R' = R''\left(\frac{R_m - R_T}{R''_m - R''}\right)$$

For R_T and R'', use the measured resistance of the upper coil;

$$\left.\begin{aligned} R_T &= 0.52 \pm 0.02 \text{ m}\Omega \\ R'' &= 1.94 \pm 0.02 \text{ m}\Omega \end{aligned}\right\}$$

There is about a 0.02 mΩ difference between upper and lower coil resistance measurements. Incorporate it as a systematic error.

$$R_m = 0.44 \pm 0.02 \text{ m}\Omega$$

$$R''_m = 1.1 \pm 0.02 \text{ m}\Omega$$

$$\Rightarrow R' = (1.94 \pm 0.02)\frac{(-0.08 \pm 0.04)}{(-0.84 \pm 0.04)} = 0.185 \pm 0.11$$

Using the resistance/ft for the inner coil cable (0.5943 mΩ/ft) we obtain the position of the short:

3.74″ ± 2.22″ (9.50 ± 5.64 cm) toward the return end from tap 19D.