TS-SSC 91-069 R. Bossert 5-15-91

SSC 50mm Long Dipole Coil End Insulation System

The coil insulation system for the straight section of 50mm SSC dipoles is described in drawing 0102-ME-292225. It is shown for reference in Figure 1.

All insulation layers extend longitudinally into the end clamp on each end of the magnet. Figures 2 through 9 show each layer in an "unwrapped" condition as it extends through the end clamp. In some cases special end pieces must be added to fill spaces inside the end clamp. The straight section pieces must also be cut at the ends at some places to avoid interference with other parts. The entire insulation system including drawing numbers of straight section and end pieces is shown in drawing 0102-ME-292225. Coil insulation is done per traveller number 0102-ES-298273.

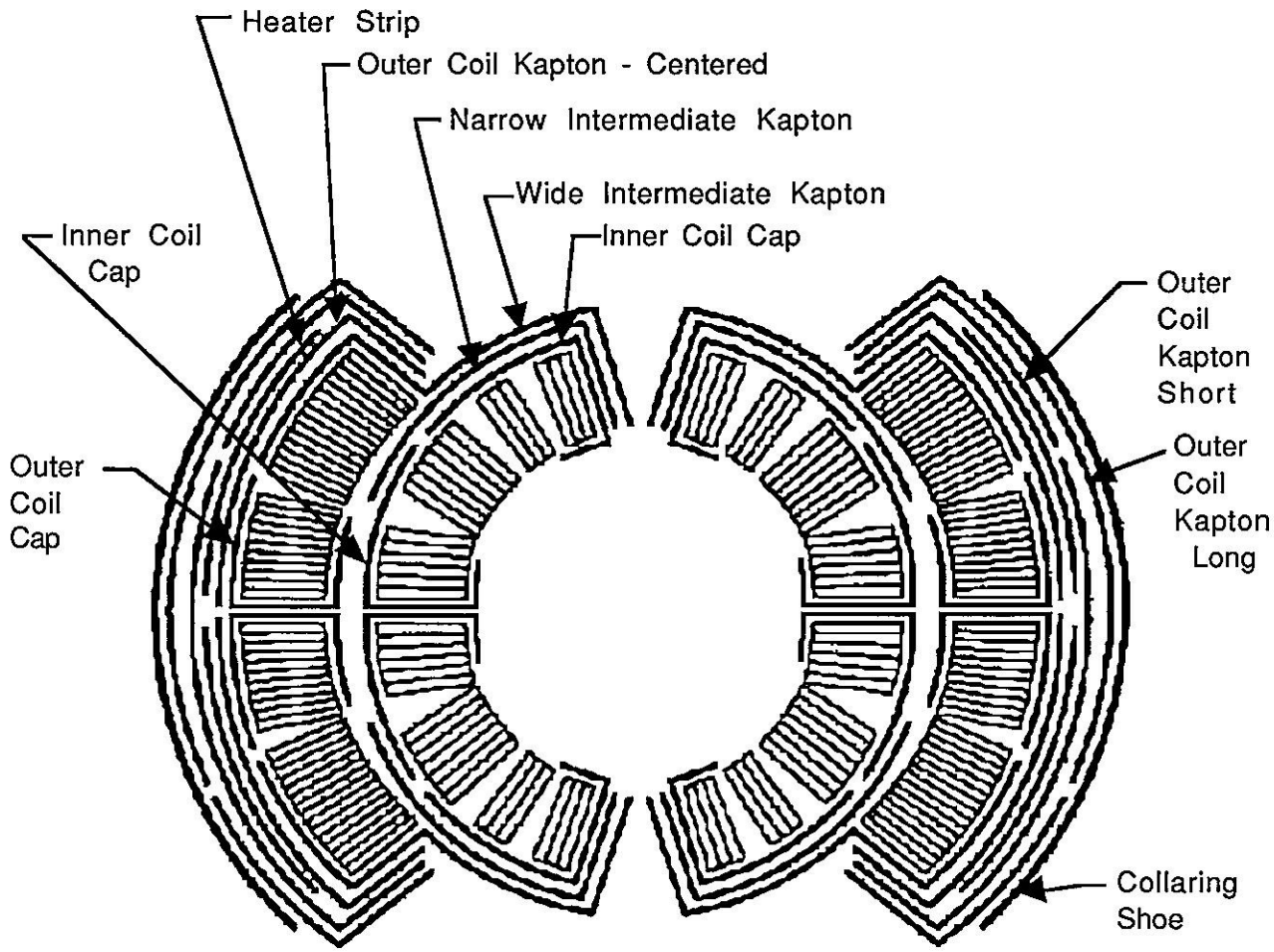

Figure 1.

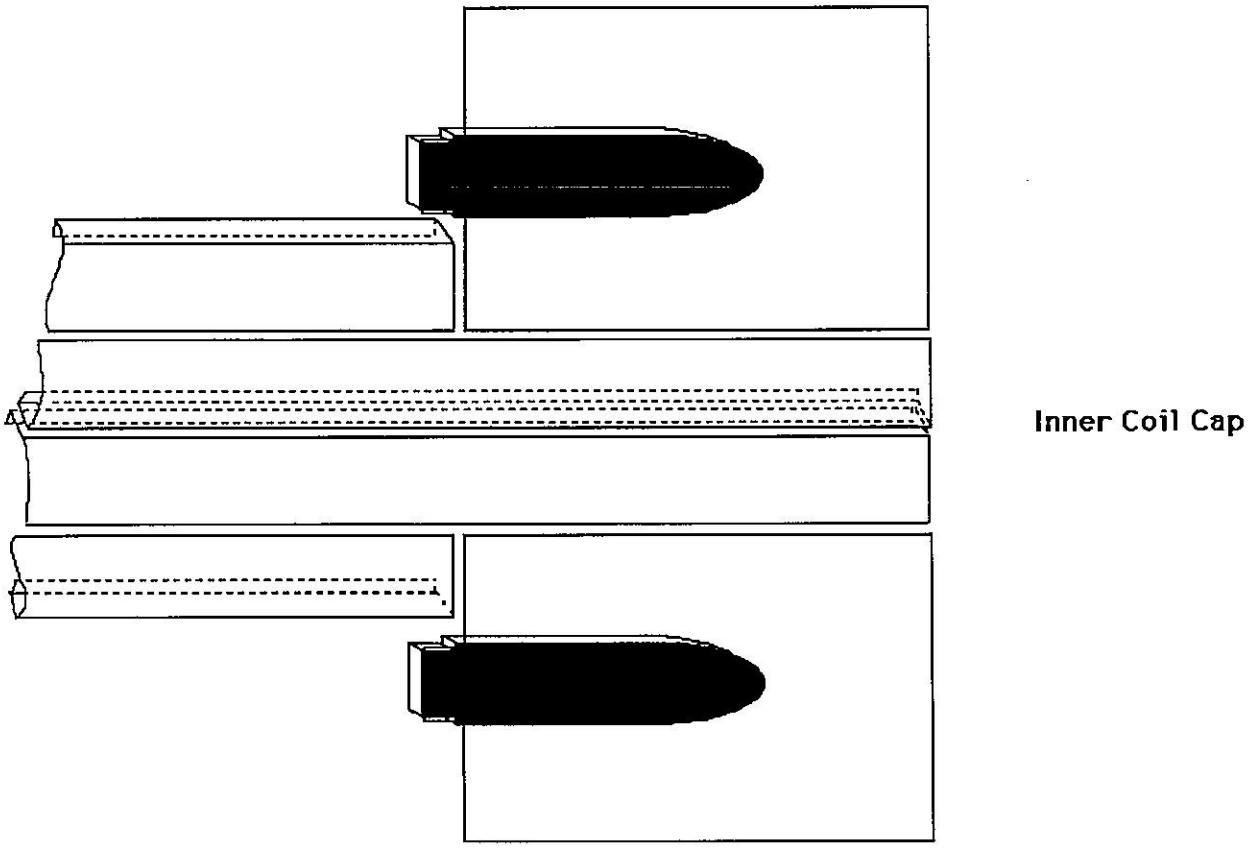

Figure 2.

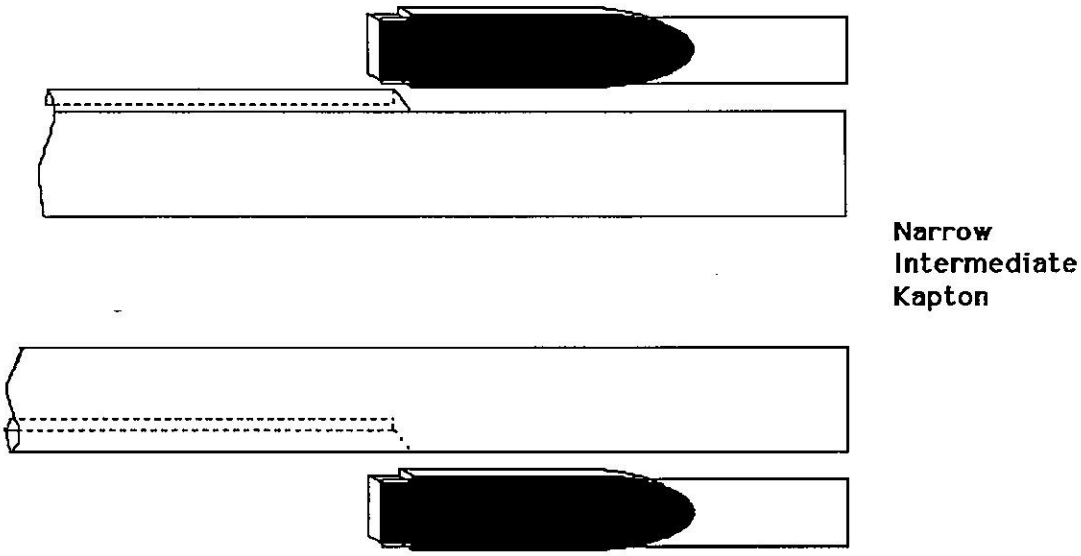

Figure 3.

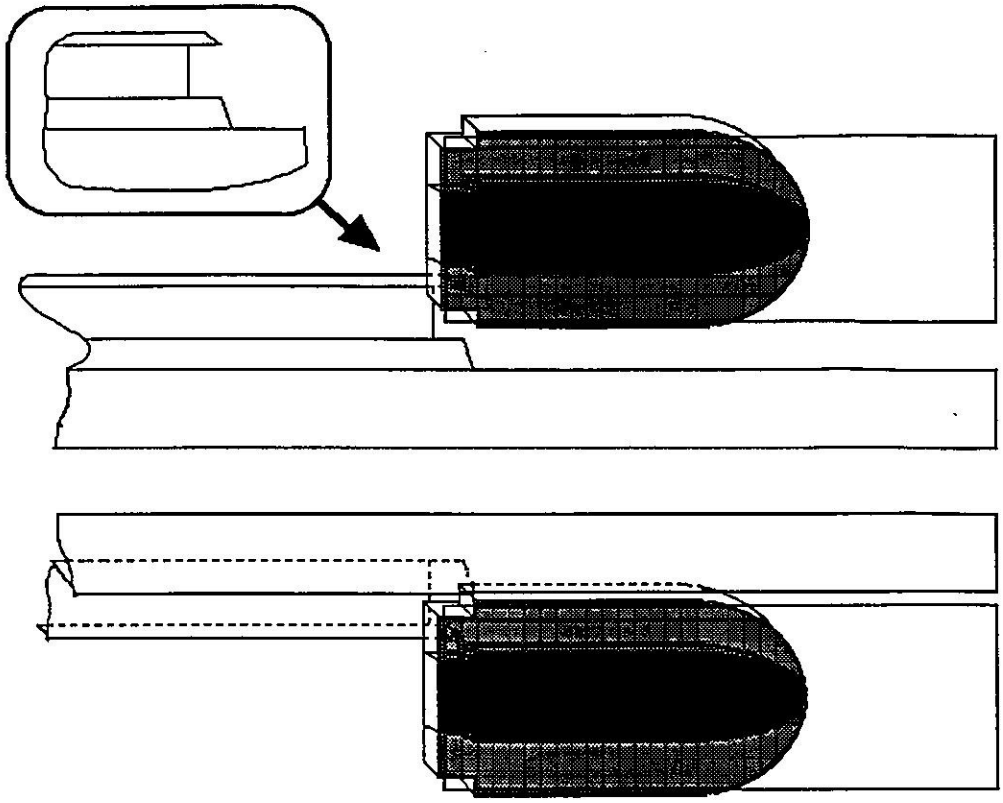

Wide Intermediate Kapton

Figure 4

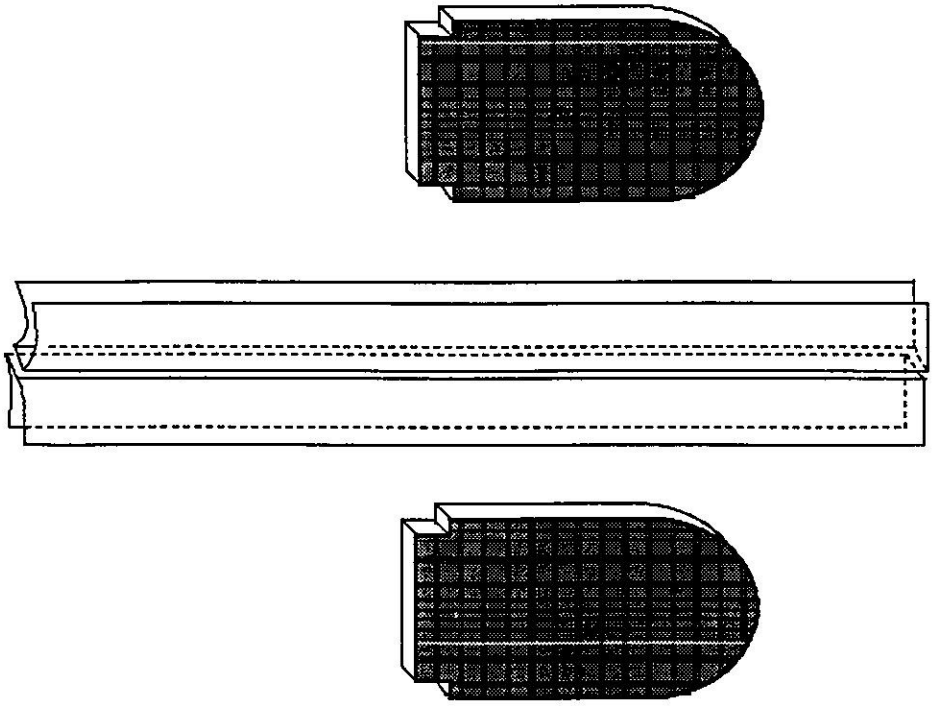

Outer Coil Cap

Figure 5

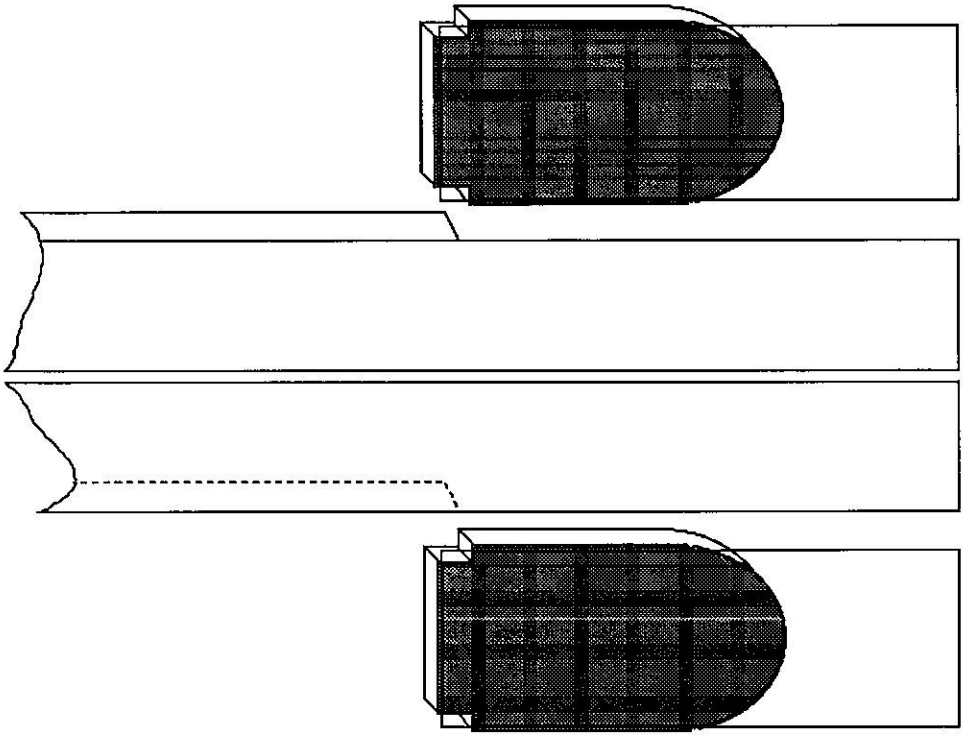

Outer Coil Kapton
- Centered

Figure 6.

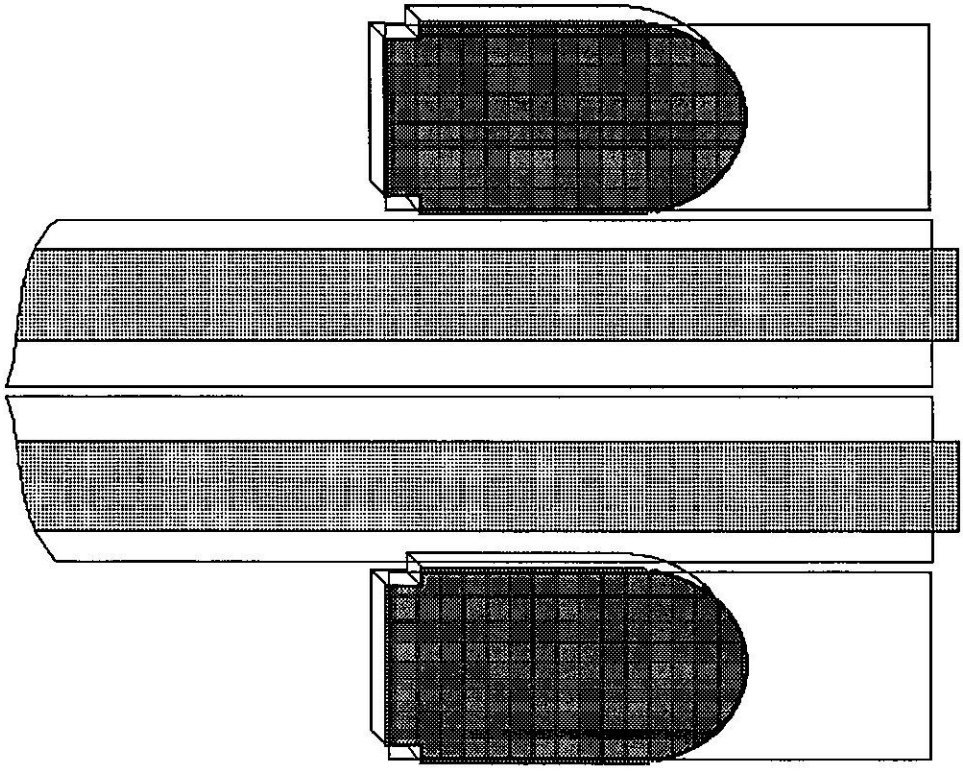

Heater Strips

Figure 7.

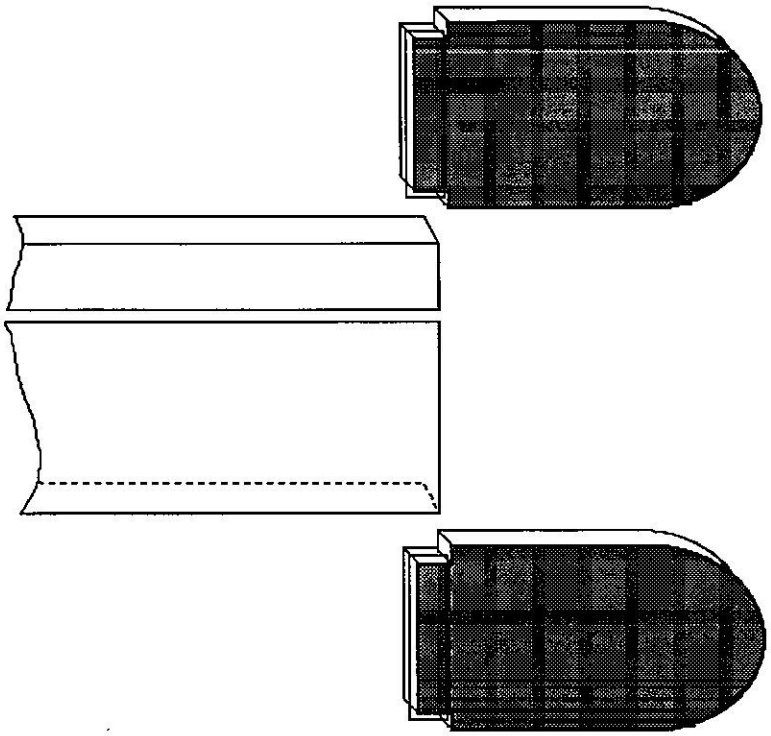

Outer Coil Kapton
- Short

Figure 8.

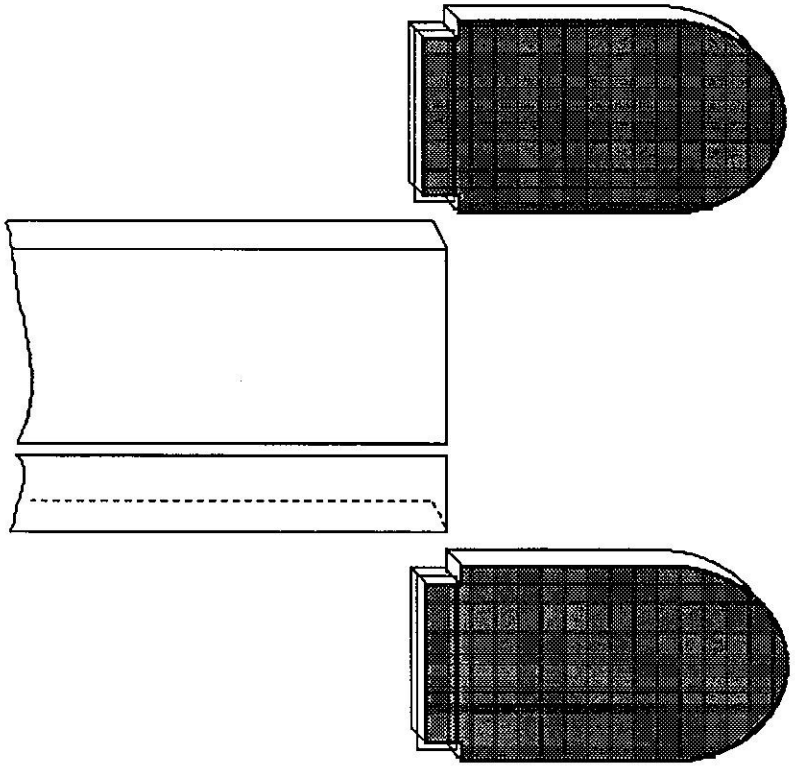

Outer Coil Kapton-
Long

Figure 9