TS-SSC 91-064 R. Bossert

SSC 50mm Dipole Beam Tube Centering

The purpose of this note is to describe the BNL method of centering the beam tube in the bore on 50mm SSC dipoles and to recommend a solution for the Fermilab dipoles.

Background information: 40mm dipole beam tubes, both BNL and FNAL, were positioned by placing kapton strips with dimpled protrusions as shown in Figure 1 directly on the surface of the beam tube. These "dimples" maintained a constant distance between the beam tube surface and the inside surface of the inner coil.

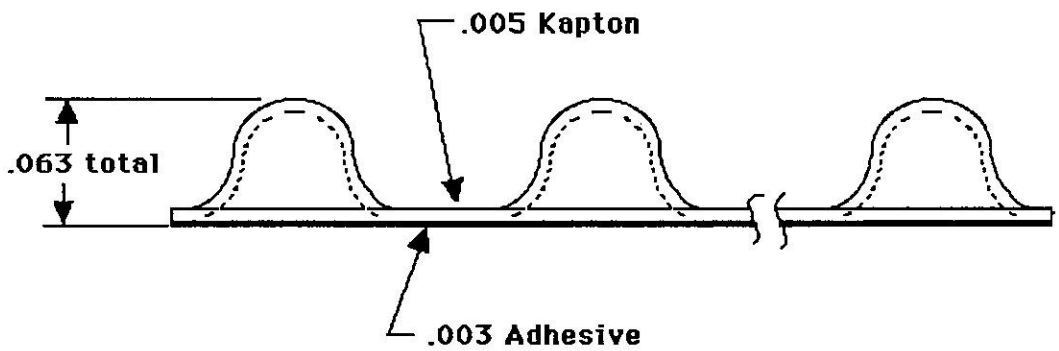

Figure 1

Figure 2 shows the FNAL 50mm ground wrap system, for reference.

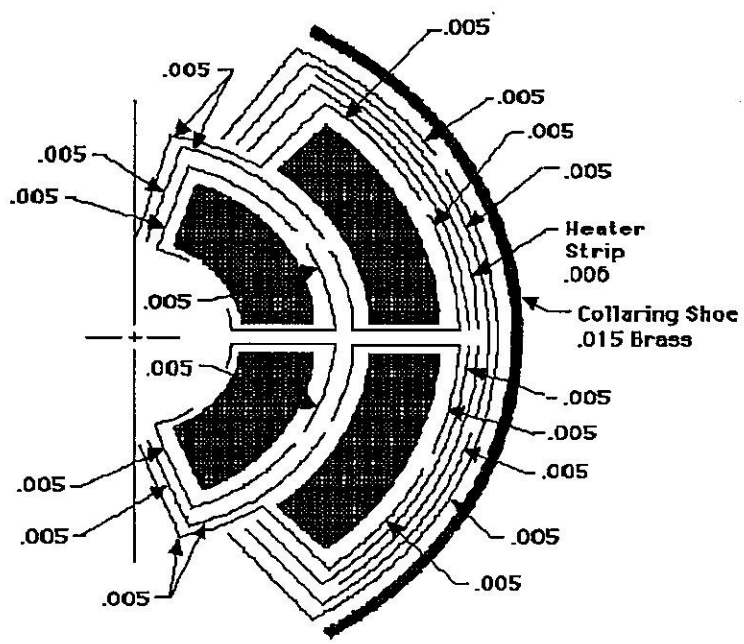

Figure 2.

The 50mm BNL design has the bumpers formed into the coil caps and other ground wrap layers as shown in Figure 3. The beam tube does not include bumpers. This is incompatable with the Fermilab ground wrap, which has already been manufactured.

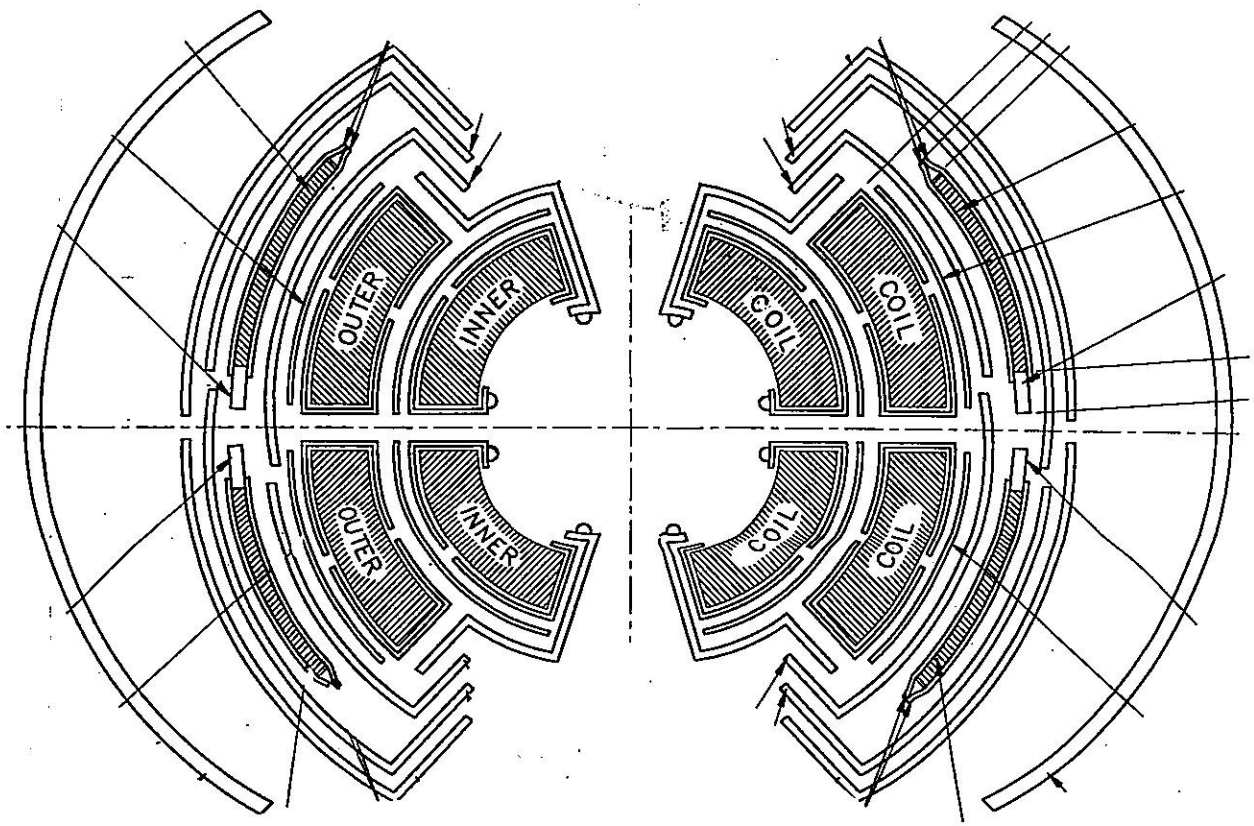

Figure 3.

Steve Dwyer of BNL states that the change was made to eliminate an assembly step. The bumpers no longer need to be applied to the beam tube. BNL short models have been manufactured and tested successfully with this system. Beam tubes are being shipped to Femilab from BNL without bumpers for 50mm magnets.

Design options available to Fermilab:

1.) Use BNL caps.

The BNL midplane cap would need to be used at both the midplane and the pole on FNAL magnets. There are two reasons, however, why the BNL caps would not fit an FNAL coil.

- BNL caps have an adhesive backing, which FNAL does not use.
- BNL caps are made of .003 kapton while FNAL caps are .005. (The BNL kapton with the adhesive backing totals about .004-.0045 inches thick).

2.) Order new caps for FNAL magnets with the appropriate dimples added.

The BNL vendor for these items is Astroseal Product Manufacturing Co. / 6 Custom Drive / Old Saybrook, Connecticut 06475 / (203)3997916. They state that they can supply dimpled kapton caps made to our design in .005 kapton within 3 to 4 weeks upon reciept of order. This is a desirable option but must include a backup position for the first magnets in case the new items do not arrive in time.

3.) Use leftover 40mm beam tube dimpled kapton and put it on 50mm tubes.

This could serve as either the long term solution or a short term backup for option #2. The dimpled kapton on the 40mm BNL beam tube material is .063 high including an adhesive backing. This is .022 lower than the present dimples on the BNL cap. This means we need to build up the 40mm material by ≈ .022 if we are to put it on a 50mm beam tube. This should not be a problem.

Mike Anarella of BNL has checked into the availability of the 40mm dimpled beam tube kapton. He has made two long magnet's worth of the material available for Fermilab.

4.) Make new dimpled kapton and put it on 50mm beam tubes. This kapton would presumably have to be produced at Astroseal. Pursuit of this option would be a deviation from the BNL beam tube design and would effectively make the beam tube centering design FNAL responsibility.

We will pursue option #2 with option #3 as a backup. A drawing of the modified coil caps was released on 4-12. BNL is meanwhile attempting to add bumpers to two beam tubes before they ship them to Fermilab. If they are unsuccessful they will ship the material to us and let us put it on the tubes ourselves. The beam tube already shipped to Fermilab (without bumpers) will be used after the new coil caps arrive.

Distribution:

W. Koska
D. Smith
J. Strait