TS-SSC 91-054 R. Bossert 3-22-91

Long Collaring Press Platen Deflection Test

This note is written as "Part 2" to previous tech support note #TS-SSC 90-081. That note dealt with the discrepancy between the measured size of the 40mm collared coil/tooling assembly and the apparent size of the assembly under load in the collaring press. A number of possible causes were discussed. Among them was the possibility that the press platen could be deflecting under load as shown in Figure 1. These deflections could cause the collaring tooling to appear more closed than it really is.

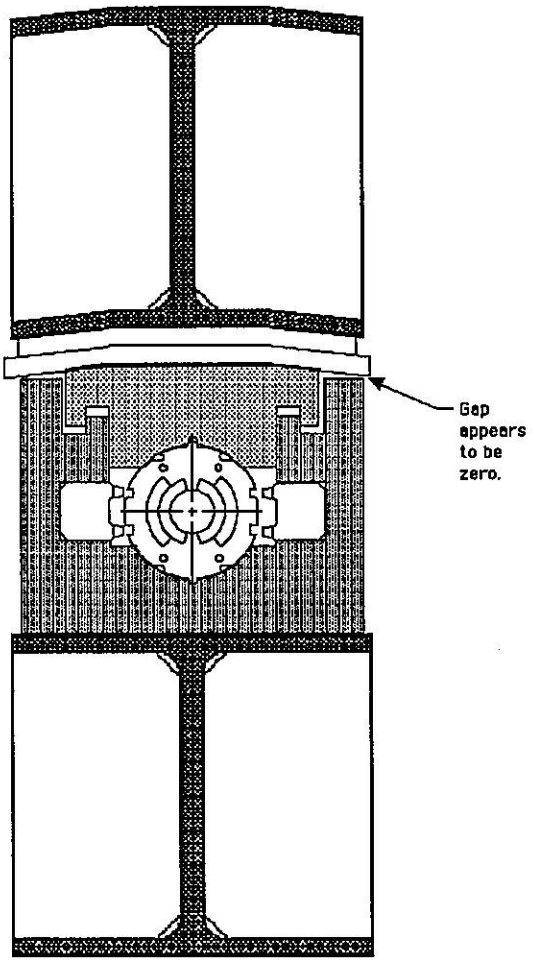

Figure 1.

To measure the platten deflection, a solid steel rod of the same outside diameter as the inside diameter of the collaring tooling was placed inside the tooling as shown in Figure 2.

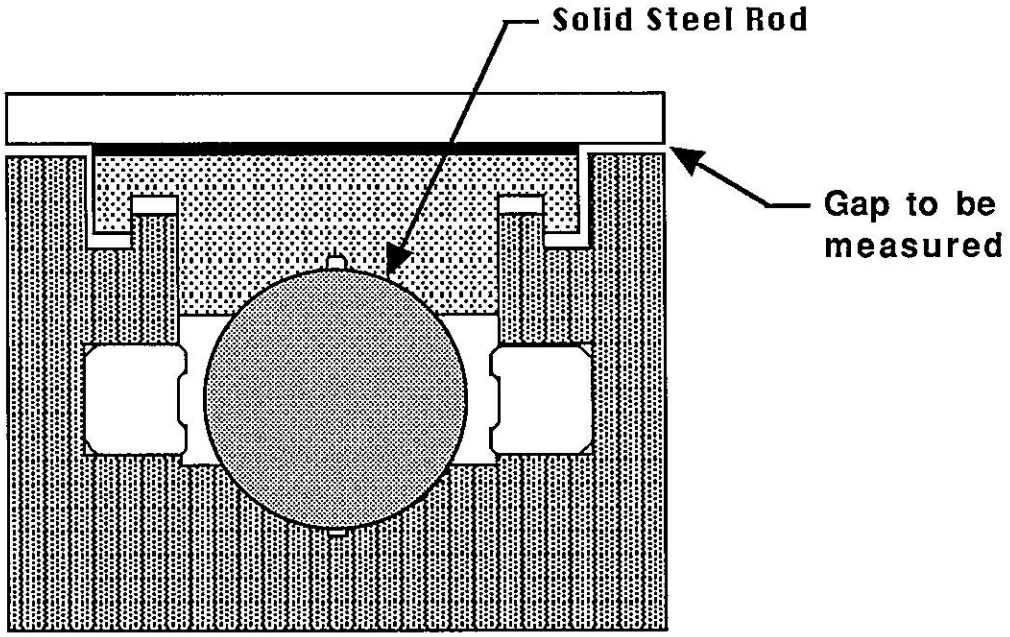

Figure 2.

The gaps between the press platen and the tooling stops (as shown in Figure 2) were measured at various pressures to see if the platen was deflecting. It is assumed that no other deflections are significantly contributing to changes in the gap size with increasing press pressure. Measurements were taken at three different pressures; 400, 4000 and 8500 pump psi. 400 psi is the smallest pressure that the press can apply (known as line pressure). 8500 psi is the maximum pressure at which we collar long coils. Measurements were taken both with feeler gages and dial indicators mounted to the lower section of the press. The feeler gage measurements are considered more reliable because they are not subjected to any other deflections which might distort the readings. The measurements are shown below together with a layout showing the position of the measurements. All numbers are pump psi.

Long Collaring Press Platten Deflection Test

(Pressing with solid steel rod)

Feeler Gages	400 psi	4000 psi	8500psi
Northeast	0.027	0.025	0.021
Northcenter	0.030	0.025	0.020
Northwest	0.026	0.020	0.015
Southeast	0.035	0.025	0.020
Southcenter	0.040	0.032	0.026
Southwest	0.042	0.033	0.030

Dial Indicator Readings	400 psi	4000 psi	8500psi
Northeast	0.010	0.019	0.024
Northcenter	0.012	0.020	N/A
Northwest	0.004	0.004	0.004
Southeast	0.008	0.034	0.044
Southcenter	0.002	0.017	0.027
Southwest	0.005	0.007	0.007

Northcenter and southcenter measurements were taken at the center of the press.
The east and west measurements were taken at distances of 3 feet on each side of center.

Curing Press

Collaring Press

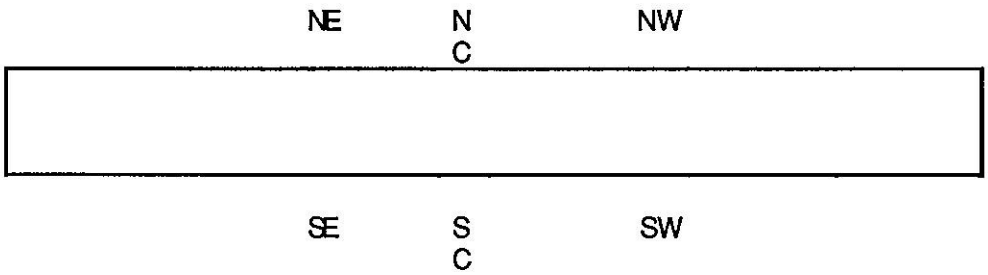

Yoke and Skin Press

Feeler gage measurements are used for analysis. Results are shown graphically in Figure 3. The differences between the gaps at 8500 psi and 400 psi vary between .006 and .015, with the mean difference .011 inches. Although the amount of data is very small, the results seem to indicate that the platen is deflecting as shown in Figure 1 by an average of about .011 inches. This could account for a large portion of the required overcompression necessary to collar a 40mm SSC magnet.

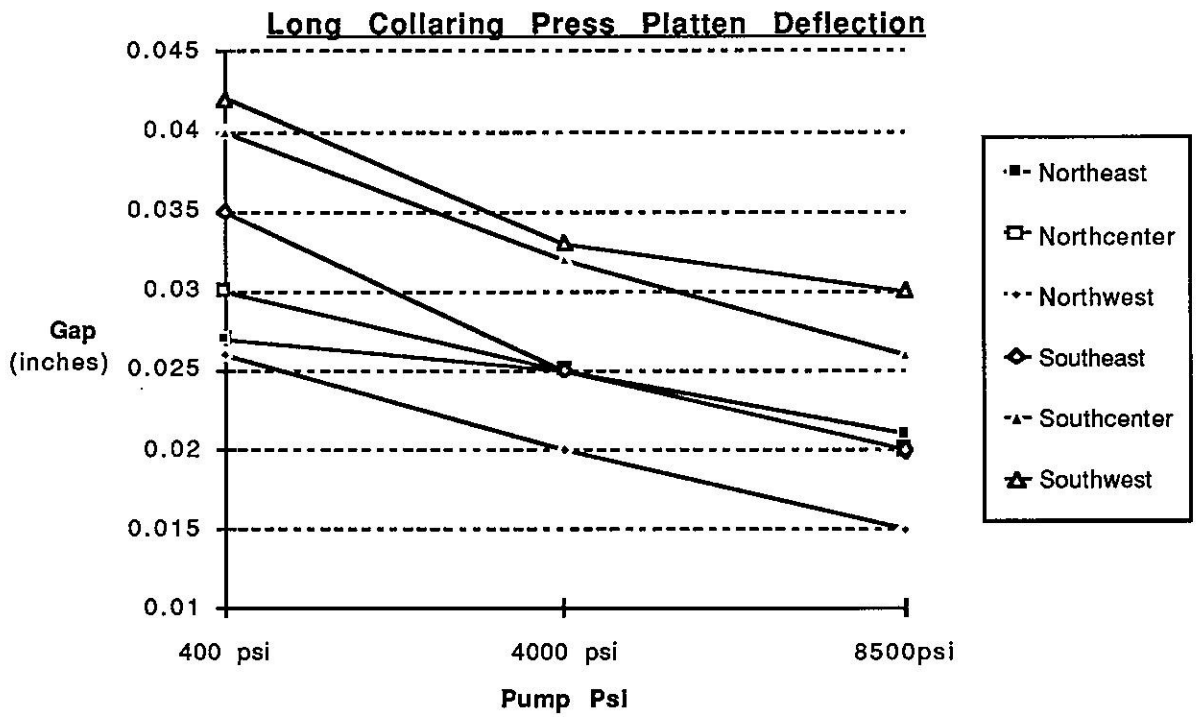

Figure 3.