Fermilab

TS-SSC 91-049
3/15/91

To: File

From: Jim Strait

Subject: Second collaring of DSA322

This note summarizes the strain gauge, collar deflection, and harmonics data from the second assembly of DSA322, which is being used for a series of collaring experiments. In the first assembly[1] one layer of outer coil ground insulation was inadvertently omitted. In this assembly the design ground wrap was used and no additional pole shim material was used.

In the earlier collar keying operations of DSA322[1] and DSA323[2] it was demonstrated that if the tooling does not provide adequate azimuthal alignment between the upper and lower collars, the collared coil must be compressed more than otherwise necessary to allow key insertion on both sides. The clearance between the flats on the collars and the mating alignment features on the tooling is measured to be 7 mils, approximately the maximum allowed by the sum of all the relevant tolerances. This allows up to 14 mils of azimuthal mis-alignment between the upper and lower collars. To improve the alignment on this assembly shims consisting of 5 mils of stainless steel and 6 mils of double adhesive tape were were place on the tooling alignment features. (EDMed lower tooling and laminated upper tooling were used providing alignment features in all 4 quadrants.)

DSA322 was collared in the 84" press using a procedure similar to that used for DSA323[2]. Details of this procedure can be found in Ref. 3. A 5 mil shim was used between the upper tooling and press platen. At 7000 pump psi the press was fully closed except for a gap of 2-3 mils on the west side. (See Table I.) Keys could be inserted fully by hand at the lead end of the magnet. The side cylinders were energized to 500 pump psi (500 lbs./in.). Depth micrometer and linear potentiometer measurements made on the tooling key bars indicated, however, that the keys on the west side were not fully inserted by about 10 mils. The vertical pressure was increased to 8000 pump psi. The depth gauge measurements indicated greater key insertion on both sides (about 10 mils), with more apparent motion on the east side. The press was then opened.

The strain gauge data are summarized in Table II and Figure 1. The peak stress (averaged over the four inner and four outer coil gauges) was 10 and 21 kpsi in the inner and outer coils respectively and the final stresses were 6.1 and 12.3 kpsi. Over the five days before the magnet was disassembled the stress decreased by 0.3 and 0.7 kpsi in the inner and outer coils. Figure 2 shows the coil stress as a function of press load before the keys were inserted. Assuming the press load is fully balanced by the coil the expected slope is 2.56 coil psi per pump psi[3]; this is indicated by the dashed line in Fig. 2.

Collar diameter measurements were made at roughly 3 inch intervals along the length of the magnet at the azimuthal locations specified in Fig. 3. To allow direct determination of the deflections, one "typical" collar pack was measured before it was assembled onto the coil. This was done by inserting a set of keys and holding the two halves apart with a pair of wooden wedge blocks. The deflected and undeflected collar diameters are shown in Table III. Also shown are the radial deflections. The average deflections are 0.8±0.1 mils in the horizontal direction and 4.1±0.1 mils in the vertical direction. (The error bars are the standard deviation of the mean based on the scatter of the data and do not include any systematic errors from the measurement process.) The 53° and 127° measurements and the "left" and "right" measurements agree with each other within 0.4 mils.

Harmonics were measured with the mole and the values the normal sextupole and decapole moments are compared among DSA320-322 in Table IV. (A more complete discussion of harmonics measurements of DSA322 as well as other recent 50 mm model magnets is in preparation[4].) The values of the b_2 and b_4 are quite consistent among the three magnets with the exception of the first assembly of DSA322 in which a layer of ground wrap was omitted[1].

References

[1] J. Strait, First collaring of DSA322, TS-SSC 91-030, 2/12/91.

[2] S. Delchamps, DSA323 collar keying data, TS-SSC 91-036, 2/22/91.

[3] J. Strait, DSA322 Assembly Experiment Plan, Version ≥3.2, TS-SSC 91-048.

[4] S. Delchamps, to be published.

DSA-322

DSA322 Assembly Experiment Plan

2·28·91

2ND ATTEMPT

III. Second assembly

3) Collar keying

Press pump pressure (psi)

	0	750	2000	4000	6000	7000	8000	9000
R(upper)								
R(lower)								

Press Gaps:

SOUTH	Pos 1	XXXXXXX XXXXXXX	XXXXXXX XXXXXXX	>15	0	0	0	0	
	Pos 2	XXXXXXX XXXXXXX	XXXXXXX XXXXXXX	>15	.011	0	0	0	
	Pos 3	XXXXXXX XXXXXXX	XXXXXXX XXXXXXX	>15	.012	.003	0	0	
	Pos 4	XXXXXXX XXXXXXX	XXXXXXX XXXXXXX	>15	.015	.003	0	0	
	Pos 5	XXXXXXX XXXXXXX	XXXXXXX XXXXXXX	>15	.013	0	0	0	
	Pos 6	XXXXXXX XXXXXXX	XXXXXXX XXXXXXX	>15	.013	0	0	0	
	Pos 7	XXXXXXX XXXXXXX	XXXXXXX XXXXXXX	>15	>15	.006	0	0	
	Pos 8	XXXXXXX XXXXXXX	XXXXXXX XXXXXXX	>15	>15	.009	.003	0	
	Pos 9	XXXXXXX XXXXXXX	XXXXXXX XXXXXXX	>15	>15	.011	.002	0	
NORTH	Pos 10	XXXXXXX XXXXXXX	XXXXXXX XXXXXXX	>15	>15	.008	0	0	
		$m\Omega$ = 561.6	561.6	561.5	561.7	561.8	561.7	561.7	

561.3 ←

West

|<----18"---->|2"|<----20"---->|<----20"---->|2"|<6">|2"|<--

Collaring Mold

Pos # | 6 7 8 9 10 |

South | Collared Coil | North

Pos # | 1 2 3 4 5 |

East

Table I

From P=0 below

GAGE NO.	TYPE	COIL	Quadrant	Gage Facto	R0 (Ohms)	FNAL A0	BNL C3 FNAL A1	BNL C2 FNAL A2	BNL C1 FNAL A3
A009	Active	Inner	1	2.03	349.566	58.9	2.1E+00	7.40E-03	-1.634E-06
A011	Active	Inner	2	2.03	350.054	-26.0	3.0E+00	6.89E-03	-1.691E-06
C016	Comp.	Inner	1&2	2.03	349.560				
A013	Active	Inner	3	2.03	350.021	109.6	3.0E+00	6.74E-03	-1.569E-06
A012	Active	Inner	4	2.03	350.184	6.0	3.4E+00	6.86E-03	-1.742E-06
C014	Comp.	Inner	3&4	2.03	350.214				
A019	Active	Outer	1	2.03	349.943	-37.2	3.3E+00	6.62E-03	-1.532E-06
A018	Active	Outer	2	2.03	349.774	36.5	2.7E+00	6.91E-03	-1.543E-06
C013	Comp.	Outer	1	2.03	349.922				
C012	Comp.	Outer	2	2.03	350.155				
A014	Active	Outer	3	2.03	349.865	12.7	2.8E+00	6.56E-03	-1.468E-06
A015	Active	Outer	4	2.03	350.104	49.8	2.7E+00	6.83E-03	-1.505E-06
C008	Comp.	Outer	3	2.03	349.812				
C009	Comp.	Outer	4	2.03	350.354				

		Hydraulic Pressure		Average Coil Stress			d(Stress)/dPv		
Date	Press	Vertical	Horizontal	Inner	Outer	All	Inner	Outer	All
2/27/91	Collaring (	0	0	37	15	26			
2/28/91	Collaring (	0	0	35	17	26			
2/28/91	Collaring (	750	0	179	506	343	0.19	0.65	0.42
2/28/91	Collaring (	2000	0	500	4257	2379	0.26	3.00	1.63
2/28/91	Collaring (	4000	0	2584	8699	5642	1.04	2.22	1.63
2/28/91	Collaring (	6000	0	6150	16178	11164	1.78	3.74	2.76
2/28/91	Collaring (	7000	0	8600	19525	14063	2.45	3.35	2.90
2/28/91	Collaring (	7000	500	8931	19670	14300			
2/28/91	Collaring (	8000	500	9855	20757	15306			
2/28/91	Collaring (	0	500	6197	12337	9267			
2/28/91	Collaring (	0	0	6098	12261	9179			
2/28/91	Collaring (	0	0	6015	12092	9053			
3/5/91	Collaring (	0	0	5782	11529	8656			
3/5/91	Collaring (	7000	0	8905	17930	13418			
3/5/91	Collaring (	8000	0	9431	18768	14100			
3/5/91	Collaring (	8500	0	9836	19438	14637			
3/5/91	Collaring (	0	0	61	68	65			

Table II

Table III

DSA322 Collared Coil (2nd Assembly)

	------ Collared Coil Diameters ------						
	A-1	A-2	B	D	C	E	F
z(in.)	(-12o)	(12o)	(53o)	(85o)	(127o)	(Left)	(Right)
2	5.354	5.351	5.316	5.312	5.317	3.756	3.756
5.5	5.353	5.353	5.316	5.312	5.316	3.756	3.756
8.5	5.353	5.353	5.317	5.313	5.317	3.756	3.756
11.5	5.352	5.352	5.316	5.313	5.318	3.756	3.756
14.5	5.352	5.352	5.316	5.313	5.318	3.755	3.755
17.5	5.352	5.352	5.316	5.314	5.316	3.7565	3.754
20.5	5.352	5.352	5.317	5.314	5.317	3.756	3.754
23.5	5.353	5.352	5.316	5.314	5.317	3.756	3.755
26.5	5.354	5.353	5.316	5.312	5.317	3.7565	3.756
29.5	5.354	5.353	5.317	5.314	5.316	3.7565	3.756
32.5	5.354	5.353	5.317	5.314	5.318	3.756	3.756
35.5	5.352	5.353	5.317	5.314	5.317	3.7555	3.755
38.5	5.352	5.353	5.316	5.314	5.317	3.756	3.755
42	5.353	5.353	5.316	5.313	5.317	3.756	3.755
Avg	5.3529	5.3525	5.3164	5.3133	5.3170	3.7560	3.7554
Sigma	0.0009	0.0007	0.0005	0.0008	0.0007	0.0004	0.0007

	--- Undeflected Collar Diameters ----						
	A-1	A-2	B	D	C	E	F
	(-12o)	(12o)	(53o)	(85o)	(127o)	(Left)	(Right)
	5.350	5.352	5.313	5.305	5.312	3.750	3.750
	5.351	5.351	5.312	5.305	5.313	3.750	3.750
Avg	5.3505	5.3515	5.3125	5.3050	5.3125	3.7500	3.7500
Sigma	0.0007	0.0007	0.0007	0.0000	0.0007	0.0000	0.0000

	--- Collared Coil Radial Deflections ------						
	A-1	A-2	B	D	C	E	F
z(in.)	(-12o)	(12o)	(53o)	(85o)	(127o)	(Left)	(Right)
2	0.0018	-0.0003	0.0018	0.0035	0.0023	0.0030	0.0030
5.5	0.0013	0.0007	0.0018	0.0035	0.0018	0.0030	0.0030
8.5	0.0013	0.0007	0.0023	0.0040	0.0023	0.0030	0.0030
11.5	0.0007	0.0002	0.0018	0.0040	0.0028	0.0030	0.0030
14.5	0.0007	0.0002	0.0018	0.0040	0.0028	0.0025	0.0025
17.5	0.0007	0.0002	0.0018	0.0045	0.0018	0.0033	0.0020
20.5	0.0007	0.0002	0.0023	0.0045	0.0023	0.0030	0.0020
23.5	0.0013	0.0002	0.0018	0.0045	0.0023	0.0030	0.0025
26.5	0.0018	0.0007	0.0018	0.0035	0.0023	0.0033	0.0030
29.5	0.0018	0.0007	0.0023	0.0045	0.0018	0.0033	0.0030
32.5	0.0018	0.0007	0.0023	0.0045	0.0028	0.0030	0.0030
35.5	0.0007	0.0007	0.0023	0.0045	0.0023	0.0028	0.0025
38.5	0.0007	0.0007	0.0018	0.0045	0.0023	0.0030	0.0025
42	0.0013	0.0007	0.0018	0.0040	0.0023	0.0030	0.0025
Avg	0.0012	0.0005	0.0019	0.0041	0.0023	0.0030	0.0027
Sigma	0.0004	0.0003	0.0002	0.0004	0.0003	0.0002	0.0004
Avg	0.0008		0.0021			0.0028	
Sigma	0.0005		0.0003			0.0003	

Table IV
DSA320-322 Harmonics

Magnet	b_2	b_4
DSA320	-2.4	0.57
DSA322 (1st assembly)	-6.2	0.89
DSA322 (2nd assembly)	-2.9	0.48
Calculated (w/o iron)	-4.0	0.14
DSA321	2.6	0.35
Calculated (with iron)	0.2	0.07

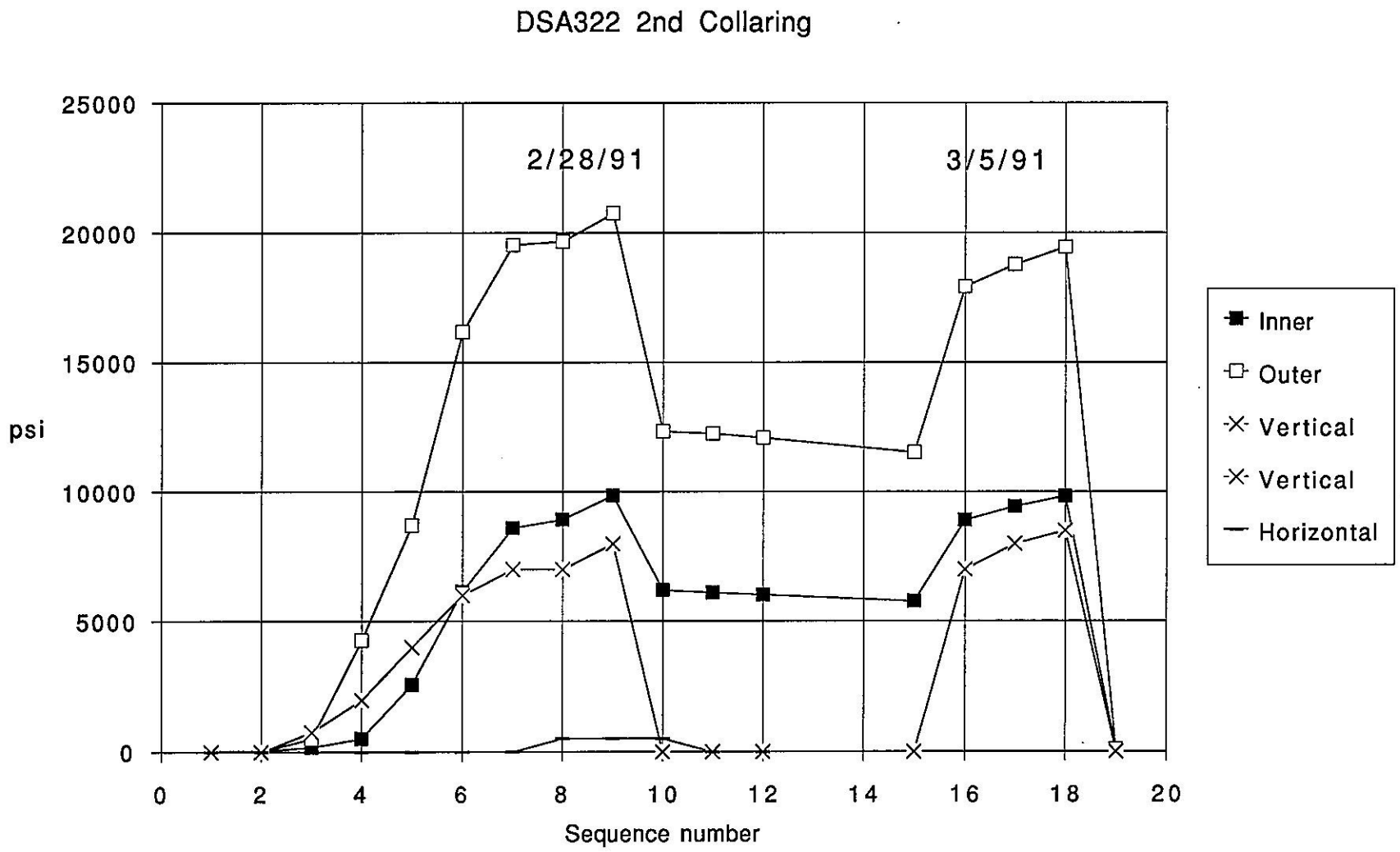
DSA322 2nd Collaring
25000
20000
15000
10000
5000
0
psi
2/28/91
3/5/91
0
2
4
6
8
10
12
14
16
18
20
Sequence number
Inner
Outer
Vertical
Vertical
Horizontal

Figure 1

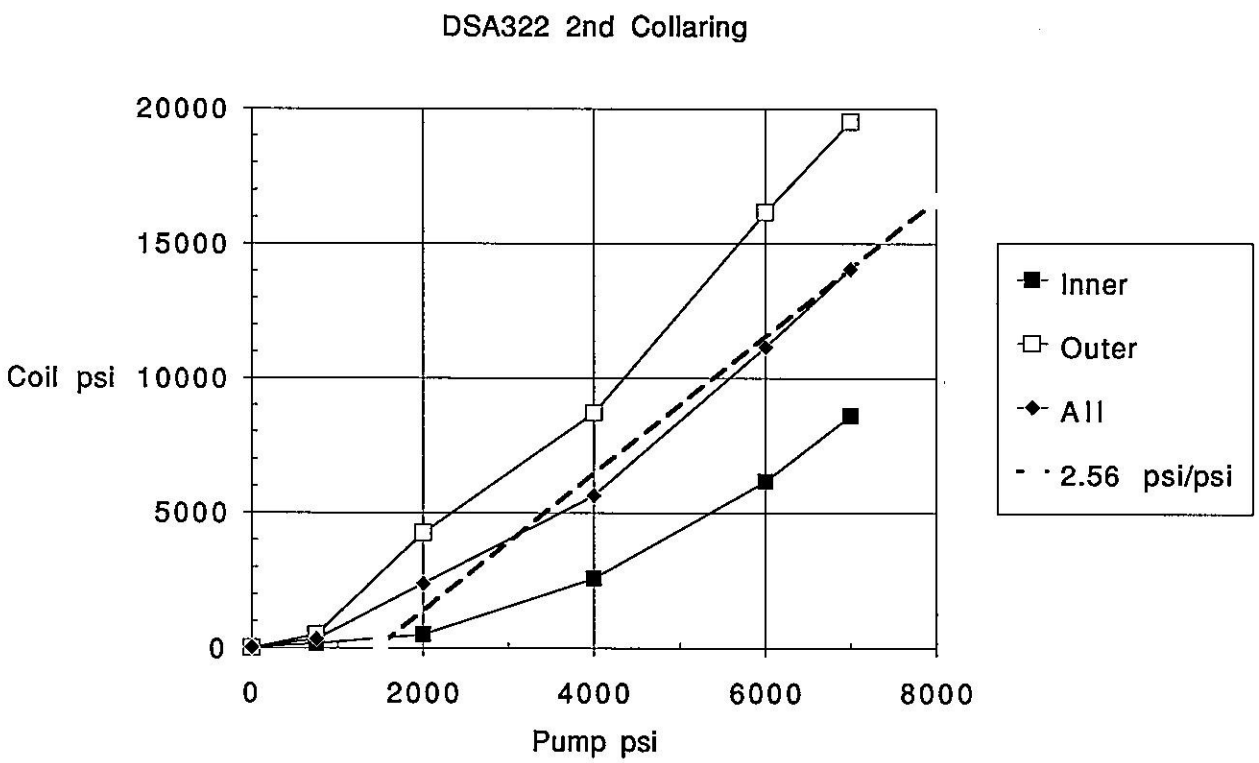
DSA322 2nd Collaring
20000
15000
10000
5000
0
Coil psi
0
2000
4000
6000
8000
Pump psi
Inner
Outer
All
2.56 psi/psi

Figure 2

III. Second assembly

4) Measure collared coil diameters at the angular locations specified on the figure below. Measure the coil at the positions along the length of the coil specified on the table on the next page and recored the data there. (These correspond to two sets of measurements per standard collar pack, two sets on the strain gauge pack and one set each on the two end packs.)

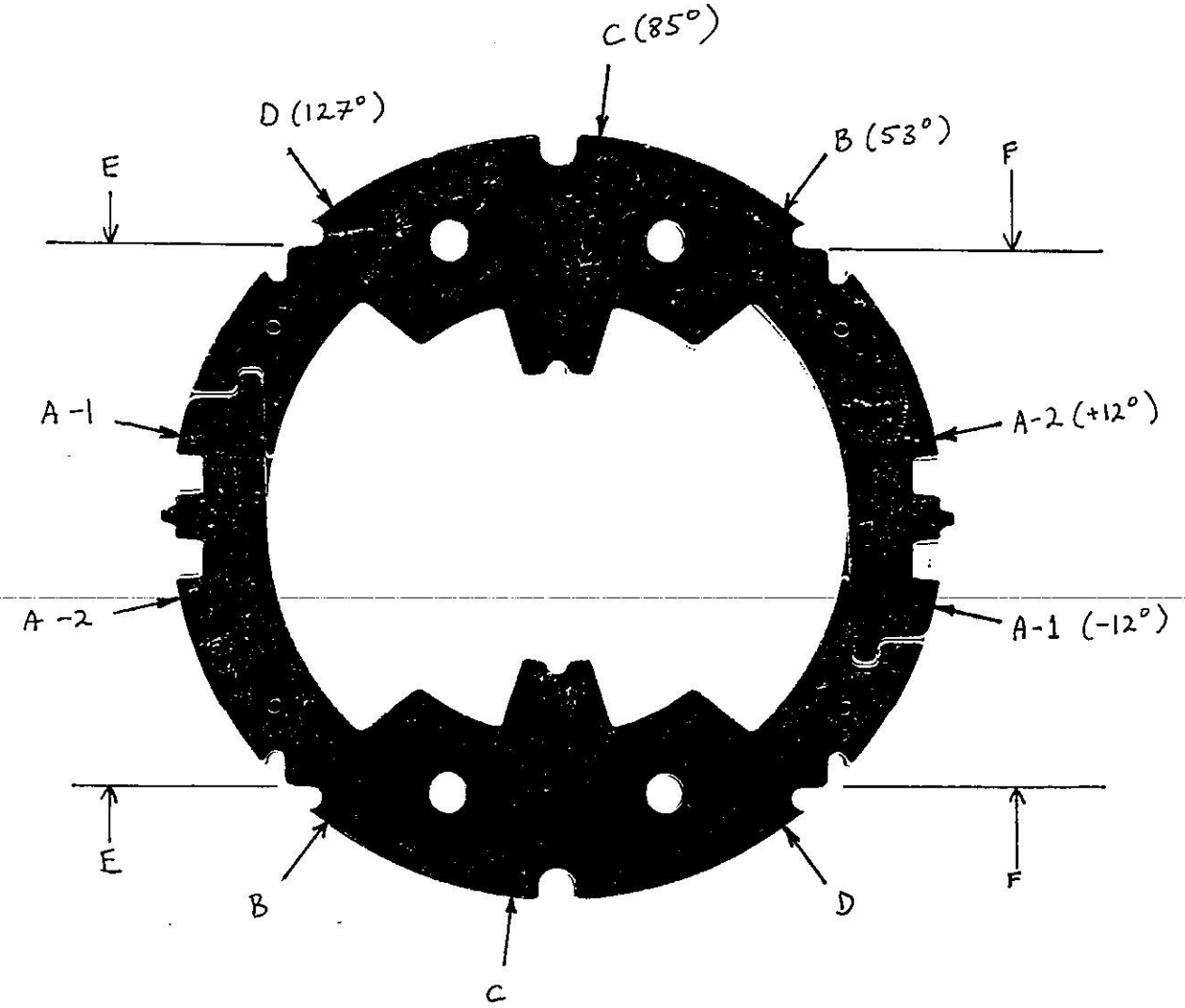

Collared Coil Viewed From the Lead End

Measurements are to be made approximately 1/8 inch from the nearest feature that breaks the circular outer surface: the key slots for dimensions A-1 and A-2, the lifting fixture features for dimensions B and D and the instrumentation wire slot for dimension C.

Figure 3