Magnet DSA321 - Construction Summary

DSA321 is the first of several 1 meter long, 50mm bore SSC models to be built at FNAL. Design of this magnet is described in detail in the FNAL "yellow book" titled 50mm Collider Dipole Magnet Requirements and Specifications[1]. A summary of the most important features is listed below:

- W6733 Cross section
- Standard cable insulation (Kapton type H film/ epoxy impregnated fiberglass tape)
- Machined G-10 coil end parts made to a geometry determined by FNAL produced computer programs.
- Ground insulation consising of all .005 kapton with collaring shoes but no collaring shims
- No strip heaters
- Vertically split yoke
- One strain gage pack
- External inner to outer coil splices
- Collet style end clamps. G-10, azimuthally wound fiber collet with stainless steel outer can.
- 57 voltage taps
- Precision skin with full length fiducial.
- End plate features: 1) Full circle, 1.5 inch thick SST.
  2) Welded directly to SST shell (replaces "bonnet" design)
- Bullets on return end.

Assembly History

1.) Coil Fabrication

The first step in fabricating FNAL coils is to preform the splice area. Preforms are made in mechanical fixtures which solder fill the cable into a precise preformed shape. Maintaining dimensional consistency in this preformed shape was a problem in the 40mm program.

Preforming for DSA321 went well. The preformed area was better than the 40mm, but still inconsistent. Preformed cable was wider in some areas than the untinned bare cable by as much as .030 inches. This caused extra space to be needed in the pocket of the collet end clamp which accepts the splice. Green putty was used to fill the extra space. New preform fixtures are being developed to correct this problem.

Winding tension was 85 to 87 lbs. for inner coils and 85 to 90 lbs for outer coils. These winding tensions worked well. There is some concern, however, that these tensions will cause an unacceptable amount of longitudinal "springback" when winding long magnets. Springback occurs when a cured coil is removed from the mold. Smaller winding tensions will be attempted in future 50mm coil winding.

Conductor placement on the ends was generally very good. The end parts did not lift from the mandrel surface during winding by more than 1/16 inch as shown in Figure 1. It was, however, difficult to completely close the ends longitudinally. Coil ends were as much as 3/16 inch longer than the end part design allows. This results in wedge gaps as shown in Figure 2. The solution will involve a combination of better end part preloading during winding and curing and adjustment of the cable paths in the end parts.[3]

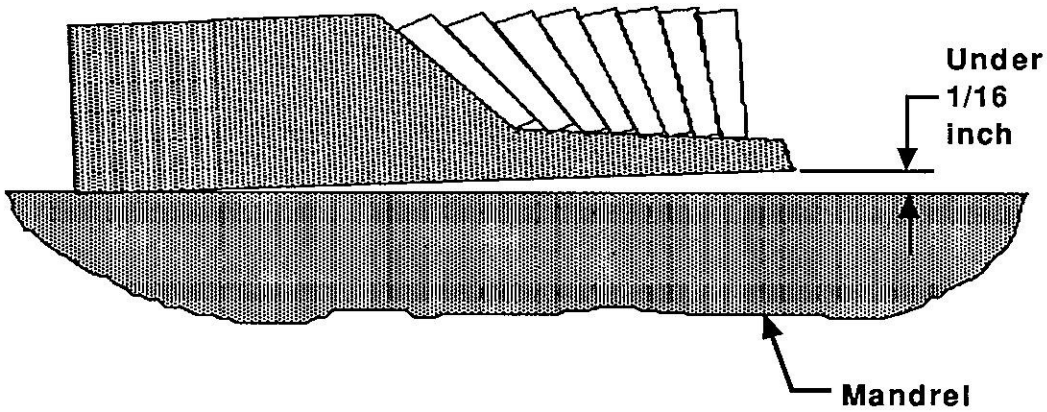

Figure 1.

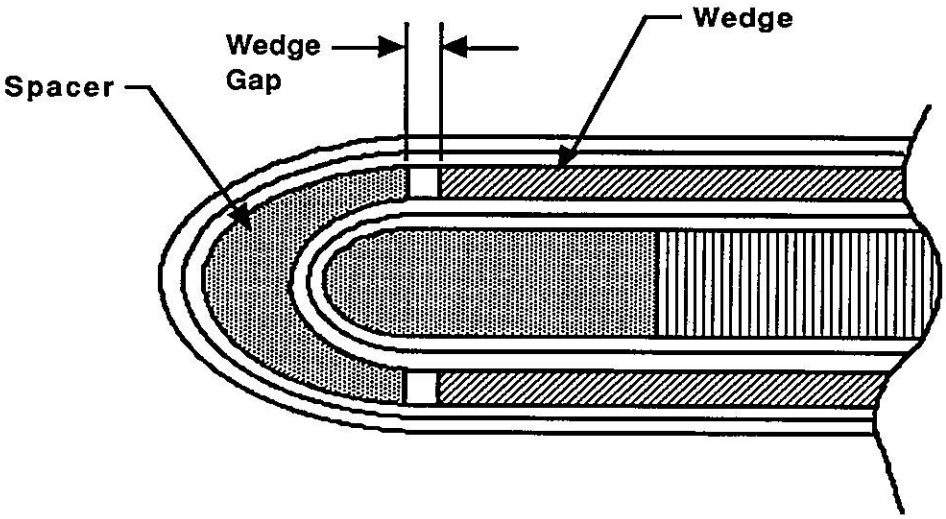

Figure 2.

The wedge closest to the parting plane on the inner coil often scrapes against the retainer as the coil is compressed into the mold. This scraping causes the glass tape and insulation to come off the wedge. This is probably a cross section problem.. The wedge has a very large angle and must rotate significantly in the mold to be pushed into position. The large angle also causes the wedge to be forced outward radially when pressure is applied in the curing mold. Improved low friction mold release might relieve the problem somewhat. It is not likely that this problem can be completely eliminated without a change in the cross section. BNL also had problems with this wedge in their first 50mm short magnet, although for different reasons[2].

Curing pressures can only be inferred from the total force applied by the press cylinders. Three forces are applied to the coils; mandrel (or radial) pressure, azimuthal pressure and end pressure. Mandrel force applied was 666 lbs. per linear inch. Azimuthal force applied was 13000 lbs./linear inch or 13000 psi for inner coils and 13700 psi for outer coils. It is uncertain how much of the azimuthal force is applied to the coils and how much is reacted by the tooling. This relationship also changes when the coil is heated. Real curing pressures are therefore smaller than the numbers stated above by an unknown amount. End loading was 1500 lbs.

Coil size measurements are shown in Figures 5 through 12. One graph is shown for each side of each coil. Coil sides are labeled "Quadrant I/III" and "Quadrant II/IV" and are oriented as shown in Figure 4.

Inner coils are roughly .010 inches larger than the master and consequently the collar cavity size at 12000 coil psi. Outer coils are about .006 inches larger at the same pressure. No material was added or removed at the poles to adjust preload. Collar deflections allow the real preloads to be smaller than the values which would be predicted from the coil measurements. Size variances within coils are comparable to the 40mm coils.

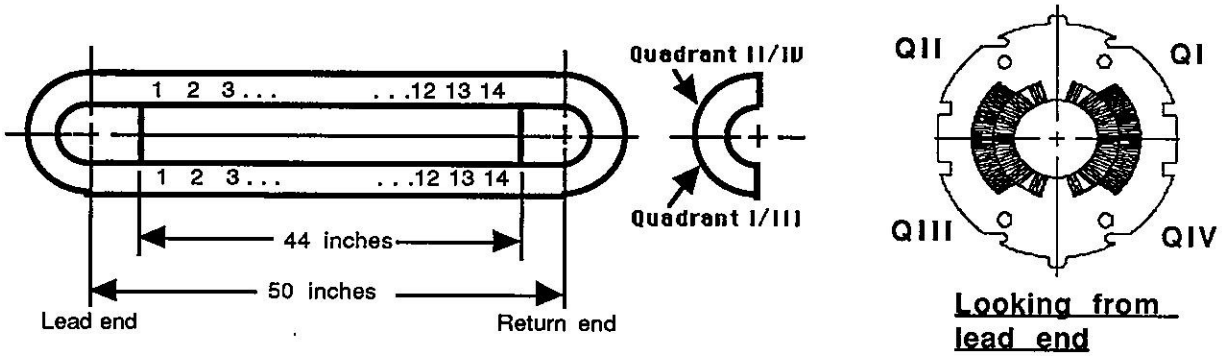

Figure 4.

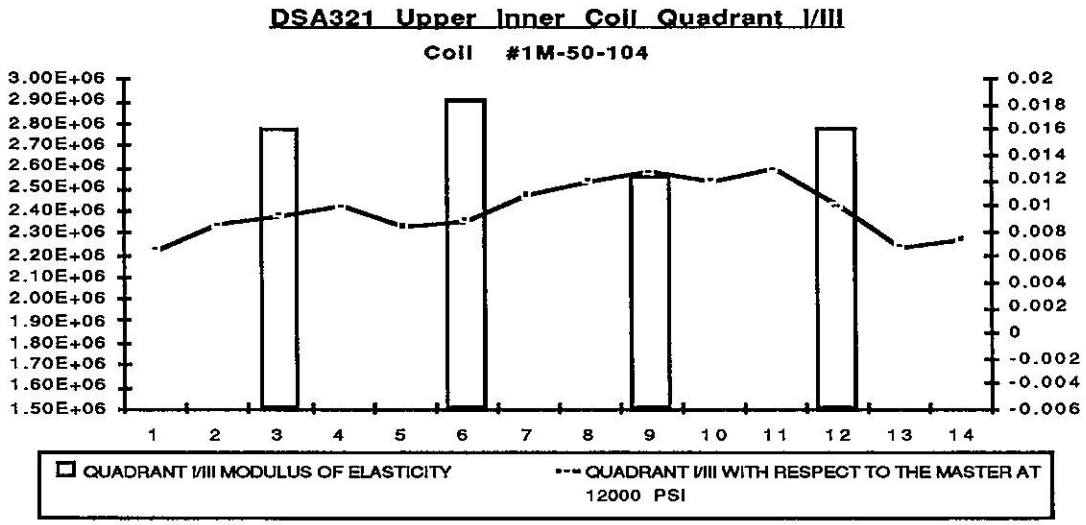

Figure 5.

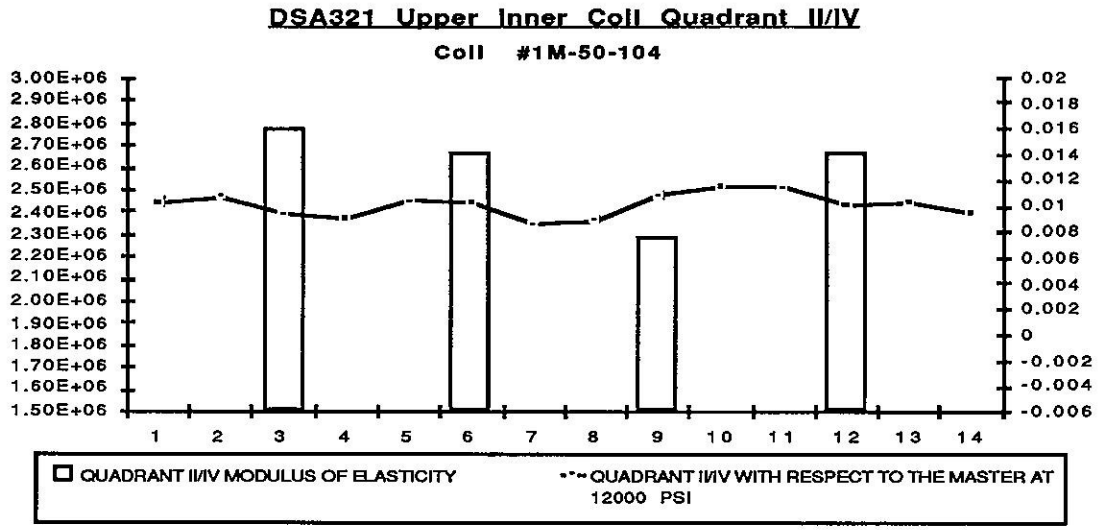

Figure 6.

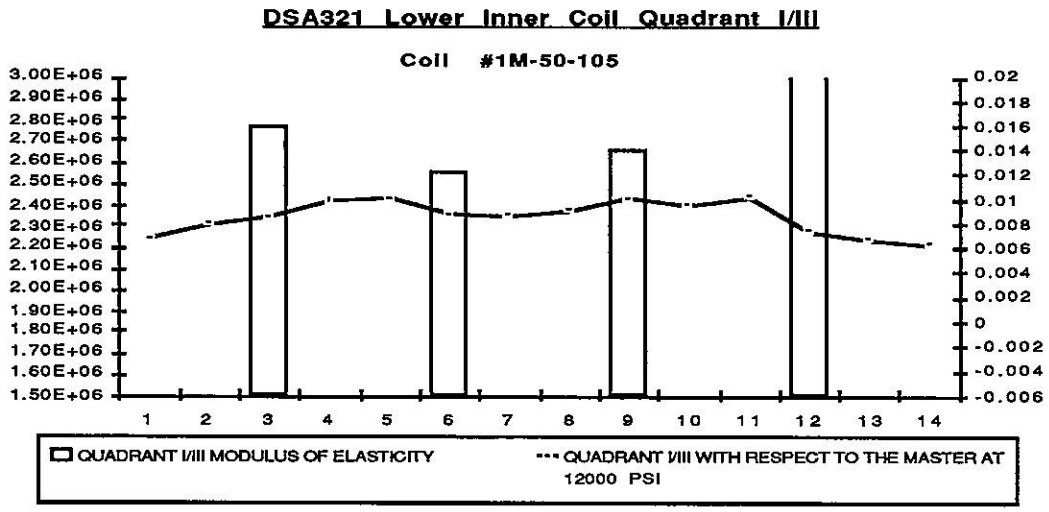

Figure 7.

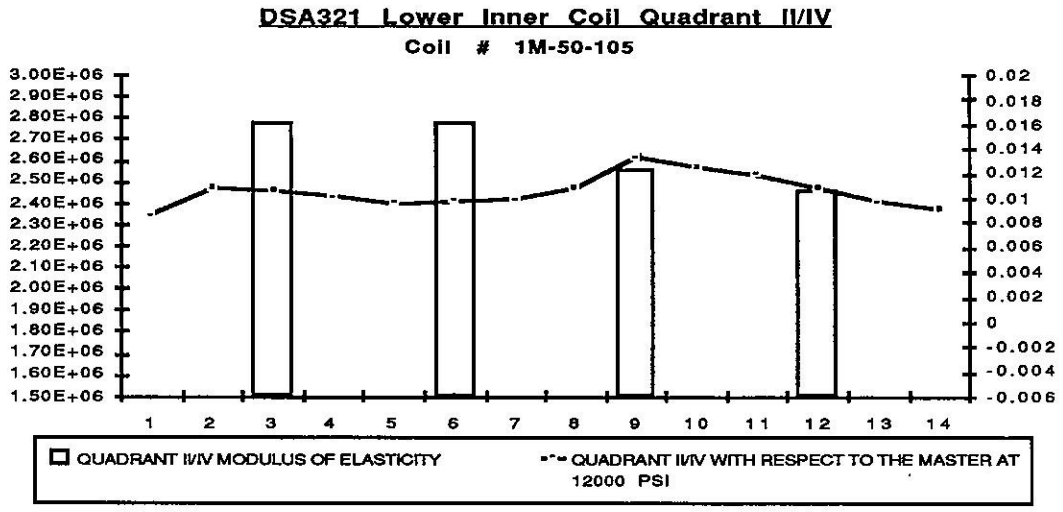

Figure 8.

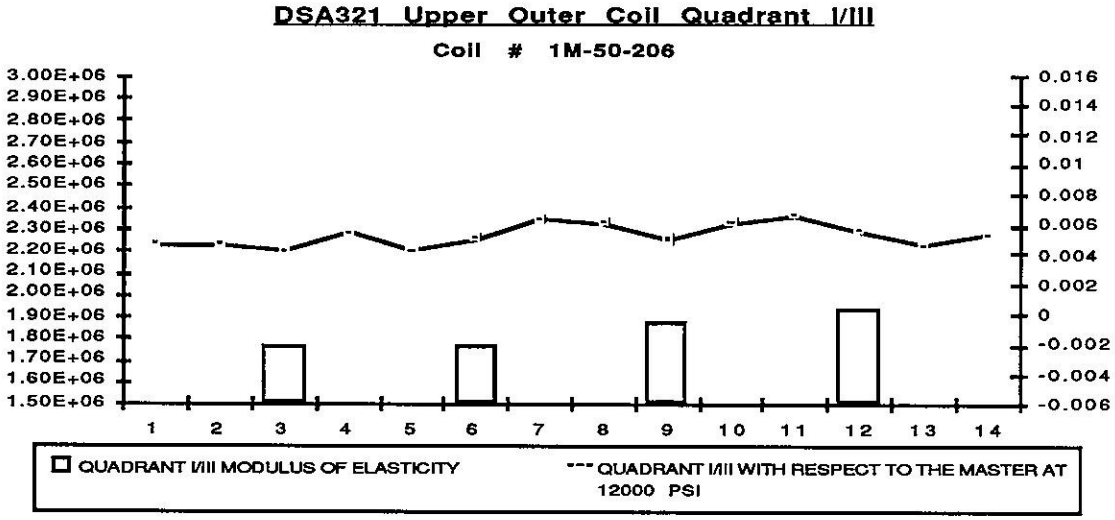

Figure 9.

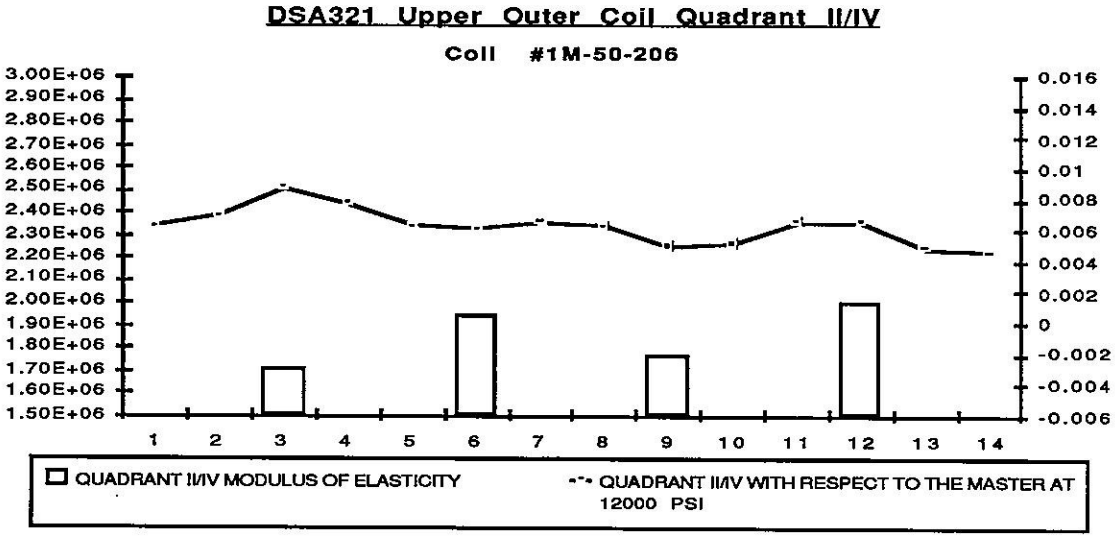

Figure 10.

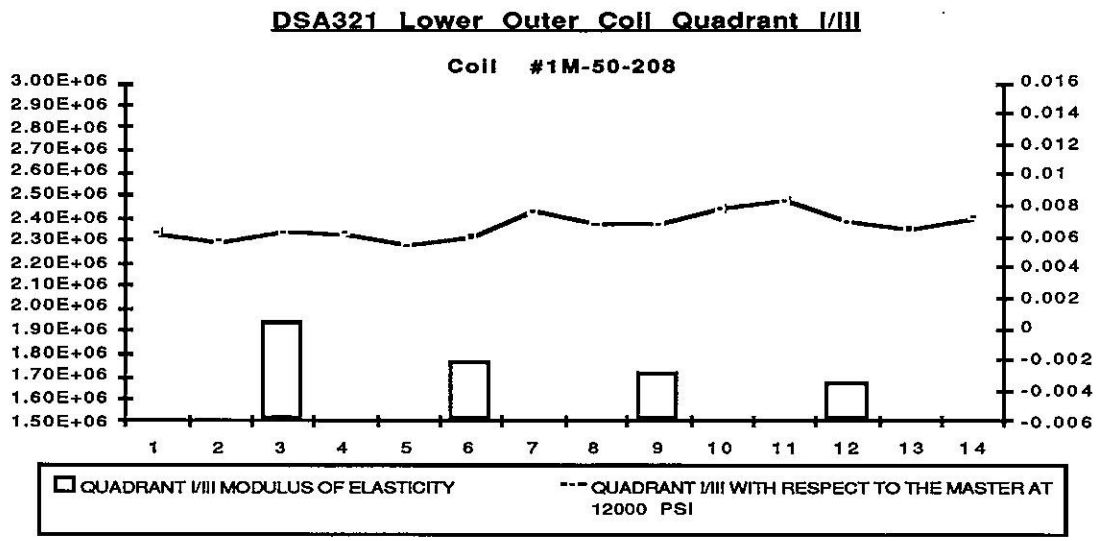

Figure 11

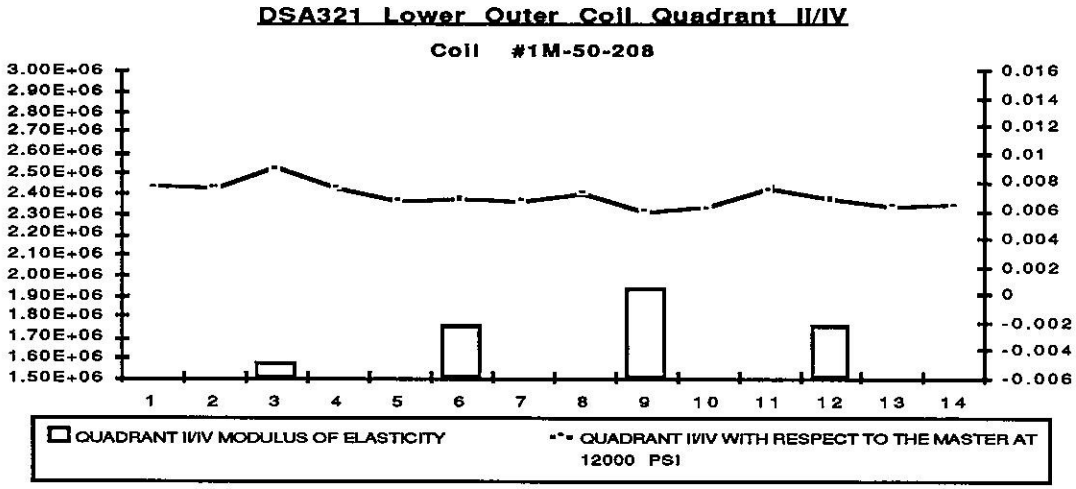

Figure 12.

One of the original outer coils used in DSA321 (#1M-50-205) developed a turn to turn short after collaring. One of the strands had apparently come out of lay during cabling. It was completely severed and "folded back" in the opposite direction over the face of the cable. This problem clearly existed before winding began. The coil was replaced by 1M-50-208.

Coil Assembly

The ground insulation system used in magnet DSA321 is shown in Figure 13. No strip heater was used because these components were not yet available. All kapton ground wrap was available from the manufacturer for use in DSA321. The brass collaring shoes were not, however, and had to be fabricated in house.

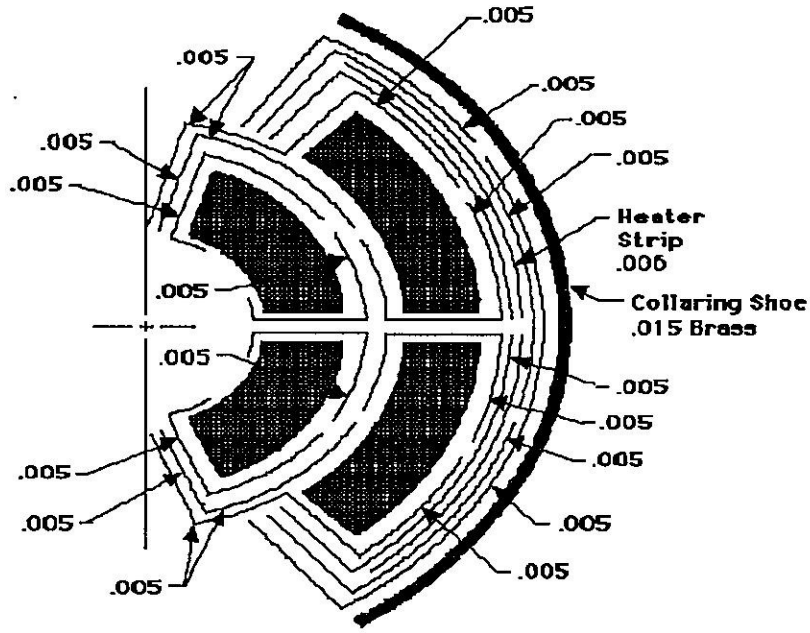

Figure 13.

When the collared coil was disassembled due to the turn-to-turn short mentioned above, a serious amount of damage to the ground wrap was observed in the strain gage area. The sharp corner of the outer coil transducer block (as shown in Figure 14) had cut into the kapton ground wrap layers. Two of the three layers were completely severed. This problem did not exist on the 40mm magnets because the transducer block, due to the different geometry, did not directly contact the ground wrap. The solution on DSA321 was to round the corners on the transducer block before reassembling the magnet. It has yet to be determined whether or not this is an acceptable long term solution.

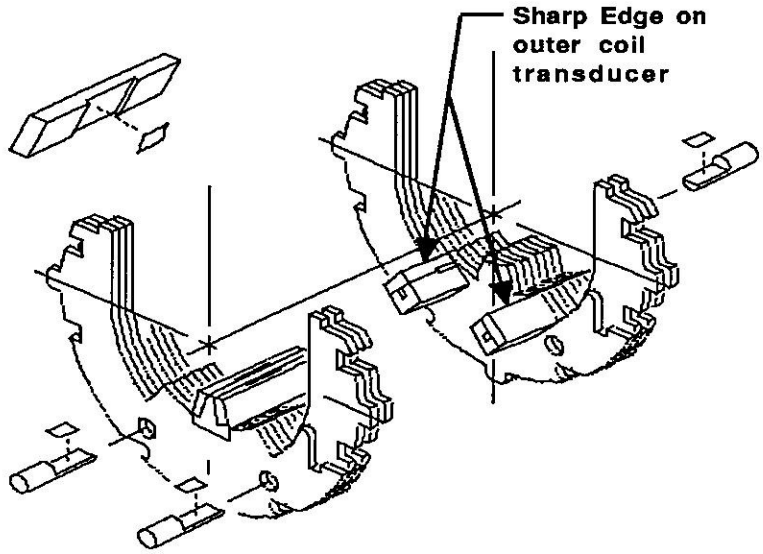

Figure 14.

Collaring:*

At the time DSA321 was collared (0n 12/18/90) the new 84 inch press was not complete. It was collared in the Tevatron collaring press which has insufficient capacity to collar the entire magnet at once. Upper collaring tooling was used both as upper and as lower tooling as shown in Figure 15. The shell was welded on 12-22-90 in the (just commissioned) 84 inch press.

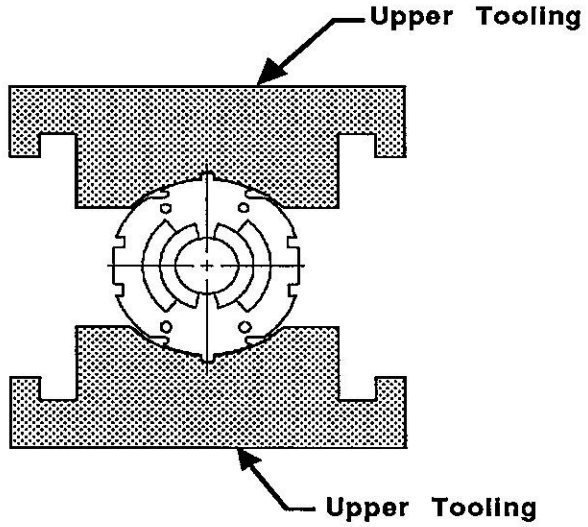

Figure 15.

To concentrate the press load the tooling covered only somewhat more than half the coil at a time. The coil was keyed in two operations. The keys were inserted by finger and hammer.

Strain gauge data were recorded during both compressions for collar keying and during the yoking operation. The data are summarized in Figure 16 which display averages over the four inner and four outer coil gauges. The strain gauge pack, located at the center of the magnet, was compressed on both pressings because the collaring tooling covered somewhat more than half the coil. The final stresses after keying were 9 and 13 kpsi in the inner and outer coils respectively. In the four days between yoking and keying the stresses decreased by a few hundred psi. The welding of the shell around the yoke resulted in a net increase of the inner stress of 0.6 kpsi and an apparent decrease of the outer stress by 0.1 kpsi. This is a smaller change than typically occurs in magnets with horizontally split yokes because the collars are compressed horizontally and are free to expand vertically. The last strain gauge measurement was taken eleven days after yoking. During this time there was a stress loss of 0.4 kpsi in the inner coil and 0.3 kpsi in the outer coil.

* The "Collaring" section of this note is an excerpt from reference 4. See reference 4 for further data concerning collaring and yoking.

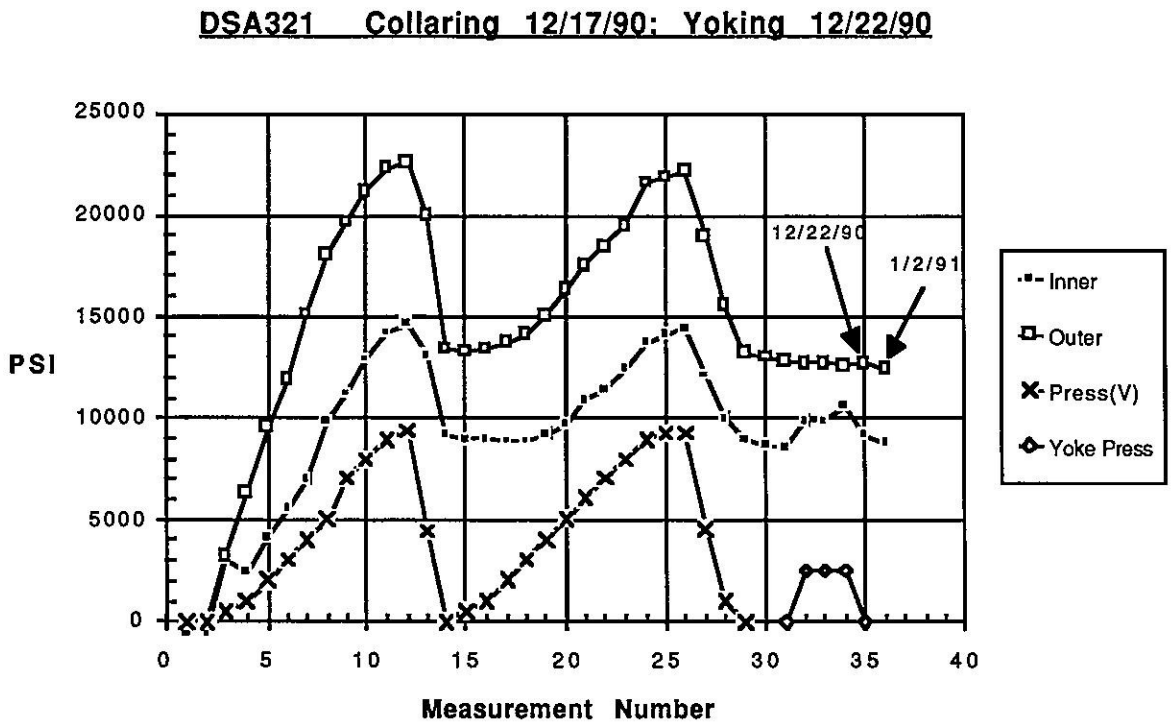

Figure 16

Measurements were taken of the completed collared coil. The measurements are shown in Figures 17 and 18. The assembly averaged 5.309 inches vertically and 5.487 inches horizontally in the free state. The nominal size of these dimensions is 5.304. vertically and 5.488 horizontally. If actual parts as inspected are used, the nominal size is .004 smaller vertically and .002 smaller horizontally. Actual deflections are therefore +.009 vertically and +.001 horizontally. Finite element anaylsis indicates that collar deflections should be .00037 inches on the vertical radius per 1000 psi of average coil preload. Horizontal deflections are near zero. This equates vertically to (.00037 inches) (11 kpsi)(2) = .0081 inches. The measurements are therefore in general agreement with the calculations.

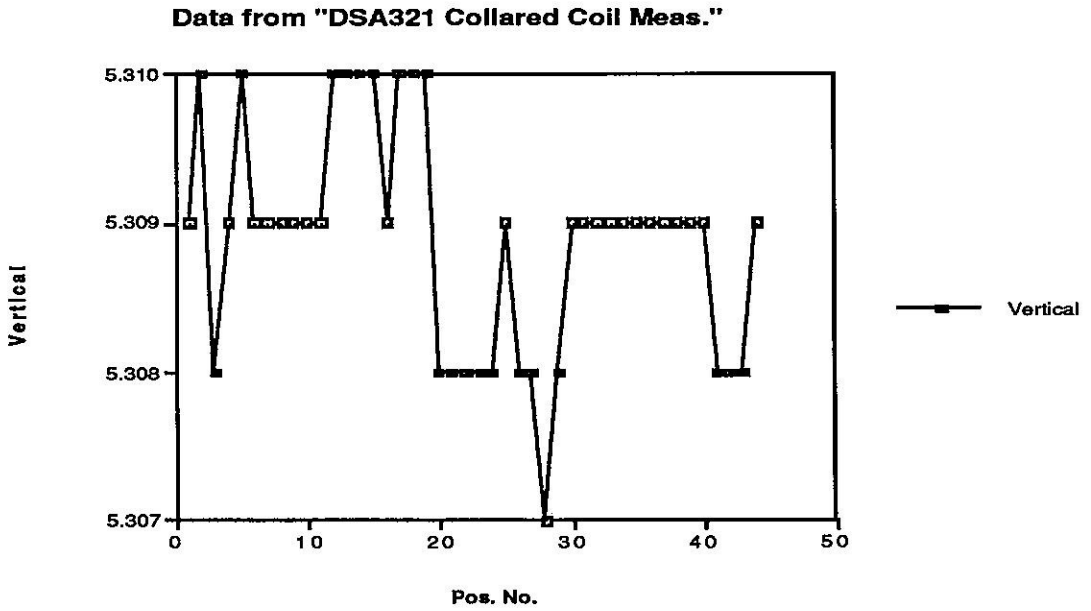

Figure 17.

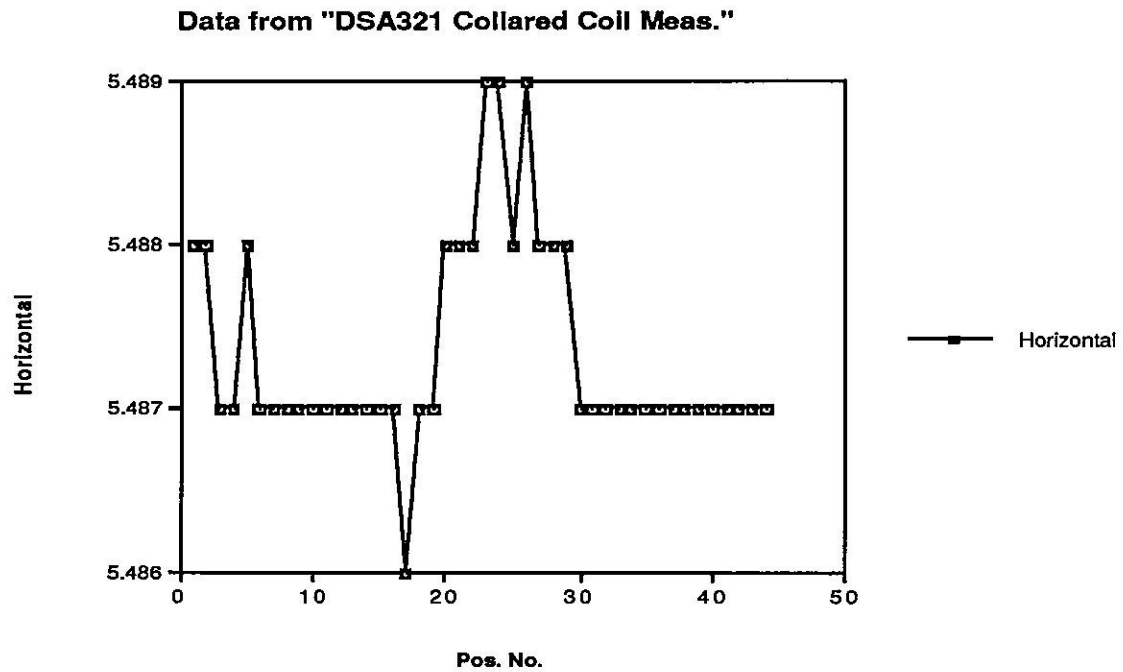

Figure 18.

End Clamps

Collet end clamps are used to support the end areas on FNAL magnets[1] as shown in Figure 19. Azimuthal fiber G-10 was used for the collet pieces for DSA321 due to the immediate unavailability of other materials. Stainless steel was used for the outer can. This combination of materials allows preload to decrease when the magnet cools down. Other materials will be tried in future magnets.

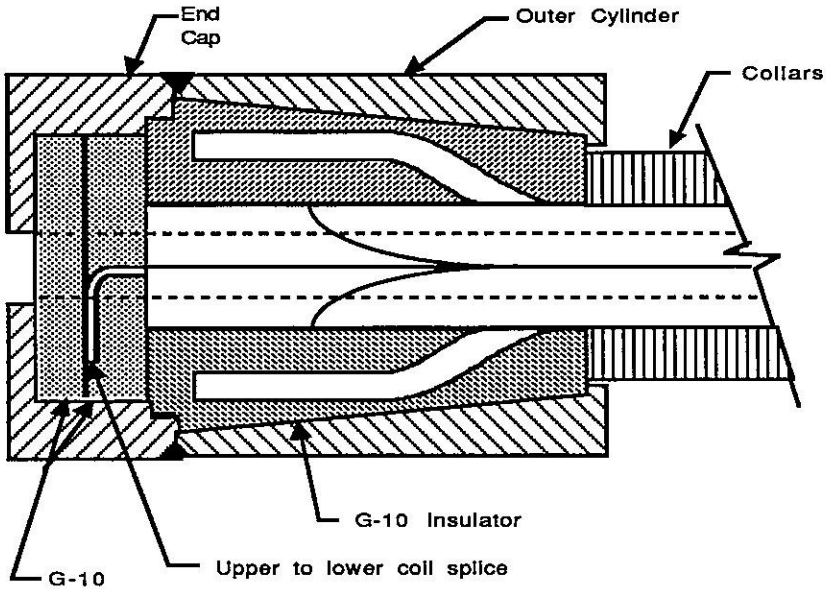

Figure 19.

18000 lbs. of longitudinal force was applied to close the return end clamp. 21000 lbs. was needed for the lead end. Time did not permit the application of strain gages to the outer surface of the end clamps. They will be used on future magnets to determine stresses in the end clamp.

Yoke and Final Assembly

Yoke filler laminations are used in the end plate area to support the skin when the magnet is cooled. They were not used in DSA321 because the material from which they are made (high manganese steel) was not available in time. They will be incorporated as soon as possible (probably around DSA324 or DSA325). Until they are used, the assembly procedure during the yoke and skinning must be altered.

Assembly procedure with filler laminations:

1.) Assemble yoke laminations, filler laminations, skins and alignment keys around collared coil.
2.) Put cold mass in press without end plates or bullets.
3.) Make longitudinal weld on alignment key.
4.) Remove cold mass from press.
5.) Cut skin to final length.
5.) Install bullets
6.) Install end plates.
7.) Weld end plates.
8.) Adjust bullet positions.
9.) Apply preload to bullets and lead end preload screws.

Assembly procedure without filler laminations:

1.) Cut skin to final length.
2.) Assemble yoke laminations, skins, alignment keys, bullets and end plates around collared coil.
3.) Put cold mass in press with end plates and bullets.
4.) Make longitudinal weld on alignment key.
5.) Remove cold mass from press.
6.) Weld end plates.
7.) Adjust bullet positions.
8.) Apply preload to bullets and lead end preload screws.

The alternate assembly procedure is required because the end plates must be installed before making the longitudinal weld if filler laminations are not used. If the longitudinal weld is made without filler laminations or end plates, the skin will distort too much to install the end plates. The end plates then cannot be removed after the longintudinal weld is made because the welding causes the skin to be pulled tight around the end plate. There are two disadvantages of the alternate procedure:

- The skin must be cut to size before welding, thereby making it hard to ensure that the skin end is perpendicular with the longitudinal plane of the magnet.
- The assembly of the bullets is slightly more involved, since they must be kept roughly in position during the entire cold mass welding procedure.

The yokes were pressed in the newly commissioned short magnet yoke and collaring press. 125000 lbs. per linear foot were applied to the yokes before and during welding. Due to time constraints, skin gages were not used on DSA321.

Bullets (end preload gages) were used on the return end of DSA321. Preload screws without instrumentation were used on the lead end. Each screw or bullet was tightened to apply a load of 200 lbs. to the end of the coil, for a total of 800 lbs. applied to each end. When the magnet is powered, the coil is expected to apply 2000-3000 lbs of force to the bullets. This is a small percentage of the total Lorentz force. The rest is reacted by the skin through friction.

DSA321 Magnet Data Summary Sheet

	Inner Coils		Outer Coils	
	1M-50-104	1M-50-105	1M-50-206	1M-50-208
Cable reel #	SSC-3-1 -00021	SSC-3-1 -00021	SSC-4-1 -00030	SSC-4-1 -00029
Bare Cable mean thickness	.0574	.0574	.0455	.0455
Coil size	+.0099	+.0096	+.0058	+.0068
Coil Stress(kpsi)				
• In coll. press, max	15000		23000	
•As keyed	9000		13000	
• Prior to welding yoke	9000		13000	
• Max in yoke press	11000		13000	
•After removal from yoke press	9000		13000	
Average collar O.D. Deflections(in.)	+.009 Vertical		+.001 Horizontal	

References:

1.) 50mm Collider Dipole Magnet Requirements and Specifications, (yellow book), edited by G. Pewitt.

2.) 1.8m, 50mm SSC Magnet DSA217 Summary of Construction Details, M. Anarella, 366-7 (SSC-MD-256).

3.) Coil End Design for the SSC Collider Dipole Magnet, J.S. Brandt, N.W. Bartlett, R.C. Bossert, J.A. Carson, G.C. Lee, Fermi National Accelerator Laboratory, J.M. Cook , Argonne National Laboratory, S. Caspi, Lawrence Berkeley Laboratory, M.A. Gordon, F. Nobrega, Superconducting Supercollider Laboratory, to be presented at the Particle Accelerator Conference, San Francisco, California, May 6-9, 1991.

4.) DSA321 Yoking and Collaring: Strain Guage Data, J. Strait, Fermilab Technical Support Technical Note #TS-SSC 91-026

5.) Construction Review of DSA321, R. Bossert, Fermilab Technical Support Technical Note TS-SSC 91-007