In-Process Testing of SSC Long Magnets

In-process testing of SSC long models consists of all tests and measurements which are performed during the production process. It includes all mechanical and electrical inspections of assemblies and sub-assemblies while the magnet is being fabricated and readouts of all instrumentation, such as coil strain gages, end preload gages and voltage taps at various stages of assembly. It does not include the routine inspection of component parts before fabrication begins.

1.0 CABLE
- 1.1 CABLE INCOMING
  - 1.1.1 CMM Statistics
    - 1.1.1.1 Cable Summary
    - 1.1.1.2 Cable Plot
    - 1.1.1.3 KoldWeld Locations
  - 1.1.2 Electrical Inspection
    - 1.1.2.1 Resistance Measurement
    - 1.1.2.2 Short Sample
  - 1.1.3 Mechanical Inspection
    - 1.1.3.1 Ten Stack
    - 1.1.3.2 Sharp Bend Test
- 1.2 CABLE INSULATING
  - 1.2.1 Mechanical Inspection
    - 1.2.1.1 Epoxy content
    - 1.2.1.2 Tape Splice Joints
    - 1.2.1.3 Insulation Pressure Test
  - 1.2.2 Sine Wave Spark Testing
    - 1.2.2.1 Pin Hole Acceptance
- 1.3 CABLE PRE-FORM
  - 1.3.1 Mechanical Inspection
    - 1.3.1.1 GO-NO-GO Gauge
  - 1.3.2 Soldering Procedures
- 1.4 WEDGE INSULATING
  - 1.4.1 Mechanical Inspection
  - 1.4.2 Spark Testing

• **Cable Summary and Cable Plot (1.1.1.1 and 1.1.1.2)**

All Superconducting cable is measured as it is being manufactured on an automatic measuring machine as shown in Figure 1. The information is supplied to the magnet manufacturer by the cable manufacturer. It is remeasured in the production process as it is being insulated.

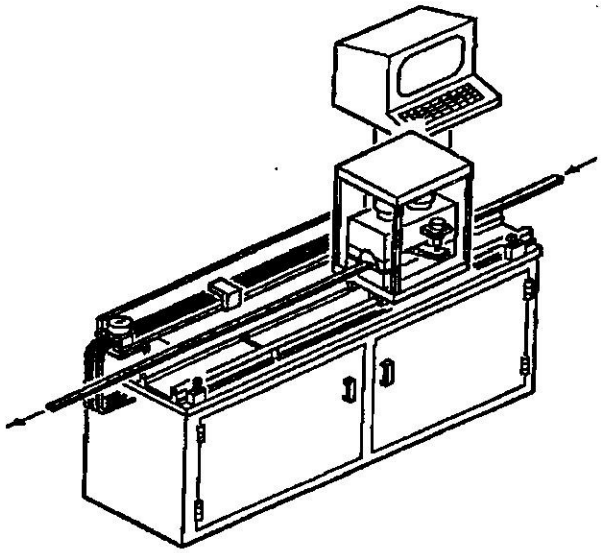

Figure 1.

3 measurements are taken:

1.) Cable Width
2.) Cable midplane thickness
3.) Cable height

The measurements are taken by LVDTs as shown in Figure 2. They are made at 5000 coil psi. The three measurements and the pressure are displayed on an attached monitor and automatically recorded. This information is supplied both in tabular (cable summary) and graphical (cable plot) form.

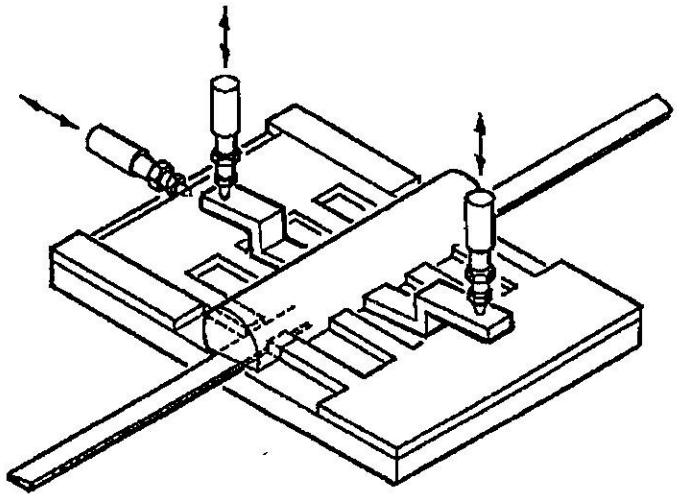

Figure 2.

• **Koldweld Locations (1.1.1.3)**

Koldwelds are the longitudinal positions on the completed cable at which two different strands are connected. Koldweld locations are noted on the data supplied by the manufacturer. No Koldwelds within the first three turns of winding or within the last full turn on any coil are allowed. The cable is then cut to derive the maximum amount of coils within these constraints.

• **Short Sample (1.1.2.2)**

Short sample measurements are taken to determine the current carrying capability of a particular reel of cable. The relationship between current, magnetic field and resistance is used to determine the "critical current" of the cable. This current is then compared to the quench current of the magnets from which the cable was used.

All short sample measurements are done by SSCL. Data supplied to Fermilab is:

- Critical current for inner cable at 7 tesla
- Critical current for outer cable at 5.6 tesla.
- Copper to superconductor ratio
- Room temperature resistance of cable
- 10 degree Kelvin resistance of cable

• **Ten Stack Cable Measurements (1.1.3.1)**

Ten stack measurements are done on each reel of cable after reciept at FNAL. The ten stack method involves stacking ten short cable sections (Figure 3), compressing and measuring the height of the stack, then making a keystone angle measurement.

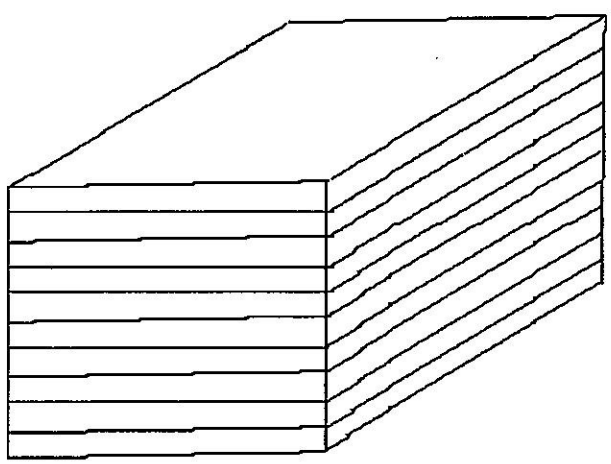

Figure 3

The ten cable sections are stacked with the keystone alternating, so that the stack will be vertical. The width of the stacking fixture is the nominal dimension of the bare cable width, thus this dimension is constrained and is not directly inspected. The base of the fixture and the top of the plunger are allowed to swivel to the natural keystone angle of the cable.

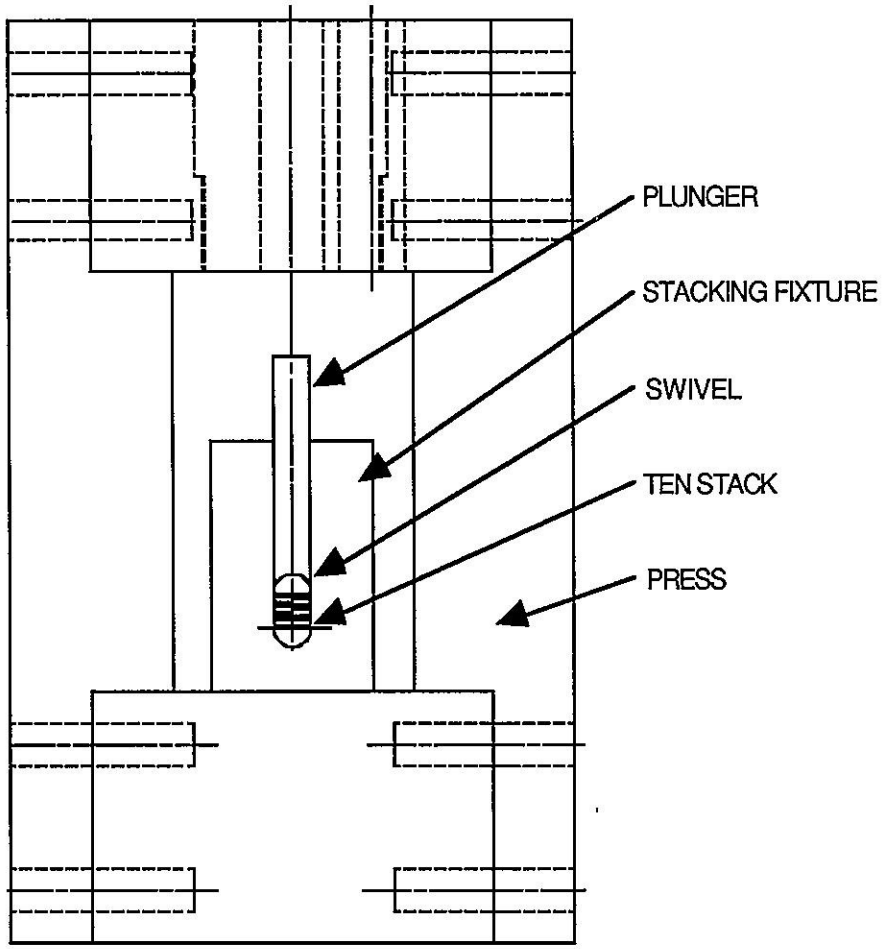

Figure 4.

The ten stack and the fixture constraining the stack are placed in a press to apply various vertical loads to the stack (Figure 4). Loads of up to ten thousand pounds can be applied to the cable. At each loading a measurement of the height, or change in height, is taken. Hence, the modulus of Elasticity is obtained.

The swivel feature of the stacking fixture allows the cable to be pressed at its natural, or actual, angle. By pressing the stack at its natural angle, the stack is compressed in the fixture rather than crushed into position. The swivel feature also allows one other very important

feature: the keystone angle can be measured. By measuring the angle of the swivel portion of the fixture the natural keystone angle of the cable is obtained. This measurement can be done at various loads, simultaneously with the height measurement.

Application of this fixture can be considered for Q.C. receiving inspection. Samples should be taken from the beginning and end of each cable reel used for coil wrapping. Consistent results should be obtained for height, modulus,and keystone angle to insure properly manufactured coils.

•Epoxy content (1.2.1.1)

Epoxy content of all glass tape is checked before insulating the cable. It is inspected for both cured and uncured epoxy.

The procedure for this inspection follows. It is included in the Glass Tape Specification #0102-ES-217717.

Epoxy Extraction Process (Hot Extraction Process)

1.) Weigh crucible to be used. Record weight in box "A" of Epoxy Extraction worksheet.

2.) Cut a sample, approximately 24 inches long, of the desired tape to be tested. Add this to the crucible and weigh again. Record this weight in box "B" of the worksheet.

3.) Subtract "A" from "B" to determine the weight of the tape sample. Record this value (weight of tape alone) in box "C" of the worksheet. (Now you are ready for testing.)

4.) Turn on cold water pump, both switches (one on top and one on the bottom). Both will light up in the on position.

5.) Position both heating elements directly below their boiling flask, then crank them up to the bottom of the round white oval on the flask.

6.) Fill flasks with trichlorethane. (They should be filled to the printed white oval on the boiling flask.) Add 15 to 20 boiling white stones into the flask.

7.) Turn on the heat regulators leading to the heating elements (turn setting to 5 or 5 1/2). It is a dual control regulator, one for each heating element.

8.) Watch for solvent to start swirling in the flask. When this occurs, vibrate the table to start the solvent boiling. (Caution; Make certain that it does start boiling before leaving it unattended. Otherwise an explosion may occur in the boiling flask).

9.) Place crucibles (with samples) in the extraction tubes. Set timer for two hours and let them boil.

10.) Take them out after the duration of two hours. Place them in the drying oven at 100 degrees C for 15 minutes. Let them cool, then weigh, and record the results in box "D". Then subtract "B" from "D" and divide by "C" for percentage. Record percentage in active resin box on worksheet.

11.) Take the crucibles and place them into the second oven at 1000 degrees F for one hour. Let them cool and weigh them again. Record the results in box "E", then subtract "B" from "E" and divide by "C" for your percentage. Record percentage in total resin on the worksheet.

12.) Divide active resin by total resin and to get "Active % of Total" and record in the appropriate box on the worksheet.

Worksheet

Part Number_____

Description _____

Lot No. _____ Test Date _____

Sample No. _____ Observer _____

Date Recieved _____ Vendor Name _____

Vendor Part No. _____

(weights in grams)

A Crucible Alone	B Crucible and Tape	C Tape Alone	D After Extraction	E After Burn-out

$\frac{B-D}{C} \times 100$ Soluble in Trichlorethane	Active Resin %
$\frac{B-E}{C} \times 100$ Total Resin Removed	Total Resin %
$\frac{Active}{Total} \times 100$	Active % of Total

- **Pin Hole Acceptance (1.2.2.1)**

The cable passes through a set of metal brushes during the insulating process. The brushes are at a potential of1.5 Kv. If a short is detected, a minimum of 2 ft. of insulation on either side of the breakdown is rewrapped.

2.0 COIL WINDING

- 2.1 Mandrel Pre-Assembly
  - 2.1.1 Tooling Inspection
- 2.2 Coil Winding (Inner/Outer)
  - 2.2.1 Coil End Parts Kit
  - 2.2.2 Wedge Kit
  - 2.2.3 Cable
    - 2.2.3.1 Epoxy Content Inspection
- 2.3 Mechanical Inspection
  - 2.3.1 Key to key Measurement
- 2.4 Visual Inspection
- 2.5 Packaging

• **Tooling Inspection (2.1.1)**

Routine tooling inspection includes:

• Checking the parts to see if any damage has occurred since the last curing operation.

• Making sure all parts are in their proper order. All are matched marked and should be put together in exactly the same order for each curing.

• **Epoxy Content Inspection (2.2.3.1)**

A sample of glass tape is removed from each coil before winding. It is inspected by the same process as described in section 1.2.1.1.

3.0 COIL CURING

- 3.1 Mold Preparation
- 3.2 Transport to Curing Mold
- 3.3 Mold Installation
- 3.4 Cure Cycle
  - 3.4.1 Curing Data Printout
- 3.5 Tooling Disassembly and Cleaning
- 3.6 Transport to Inspection Station

Curing Data Printout (3.4.1)

Hydraulic pressure of all three sets of cylinders (mandrel, sizing bars and end loading) as well as temperature is controlled and recorded during the curing process. The values are displayed on a screen as they are being recorded to allow continual monitoring by the operators.

Some attempts have been made to measure coil size and coil psi during curing. This has currently been limited to short magnets. It may be added to the long magnet curing procedure.

4.0 COIL INSPECTION

- 4.1 Electrical Measurement
  - 4.1.1 Coil Resistance (R_S)
  - 4.1.2 Coil Inductance (L_S)
  - 4.1.4 Coil "Q"
  - 4.1.5 Coil "Ringing"
- 4.2 Azimuthal Measurements
  - 4.2.1 Mechanical Measurements
    - 4.2.2 Resistance Monitoring (R_S)
- 4.3 Radial Measurements
- 4.4 Mechanical Inspection
  - 4.4.1 Visual Inspection
  - 4.4.2 Dimensional Inspection

•Electrical Measurements (4.1)

• Coil Resistance (4.1.1) - Coil resistance is measured with a Valhalla 4300B digital ohmmeter using the four wire method. This ohmeter is temperature compensated for copper wire. This greatly improves the accuracy when comparing measurements as the coils move from operation to operation. Resistance, temperature and humidity are recorded in the traveller.

• Coil Inductance (4.1.2) - A leader 745 LCR meter will be used because it will measure inductance at 120 Hz and 1 kHz. the 120 Hz frequency is necessary to reduce the change of inductance caused by the yoke iron. The 1 kHz measurement frequency is best for measuring the coils in air or with the stainless steel collars.

• Coil "Q" (4.1.3) - The ratio of inductance to resistance will be measured at 120 Hz and 1 kHz..

• Coil "Ringing" (4.1.4) - By discharging capacitors charged to between 950 and 5000 volts into each coil section the turn to turn insulation will be stressed with up to 100 volts per turn. The full 90 turn magnet assembly will be stressed to 55 volts per turn (because of the 5000 volt power supply and insulation to ground limitation). This test should pick up any "thin insulation" causing near shorts between turns.

• **Azimuthal Coil Measurements (4.2)**

All coils are measured azimuthally before collaring. Coil measurements are used to:

- determine whether the coil is acceptable dimensionally
- determine the expected preload
- determine the appropriate upper to lower pair matching

Measurements are currently made on a small portable fixture as shown in Figure 5. The measurements compare the azimuthal or "arc length" of a quadrant to a master of the correct size. Both coil and master are individually placed in a steel cavity and a load is applied with a hollow bore hydraulic cylinder. An automatic, computer controlled fixture will soon be used for long coils.

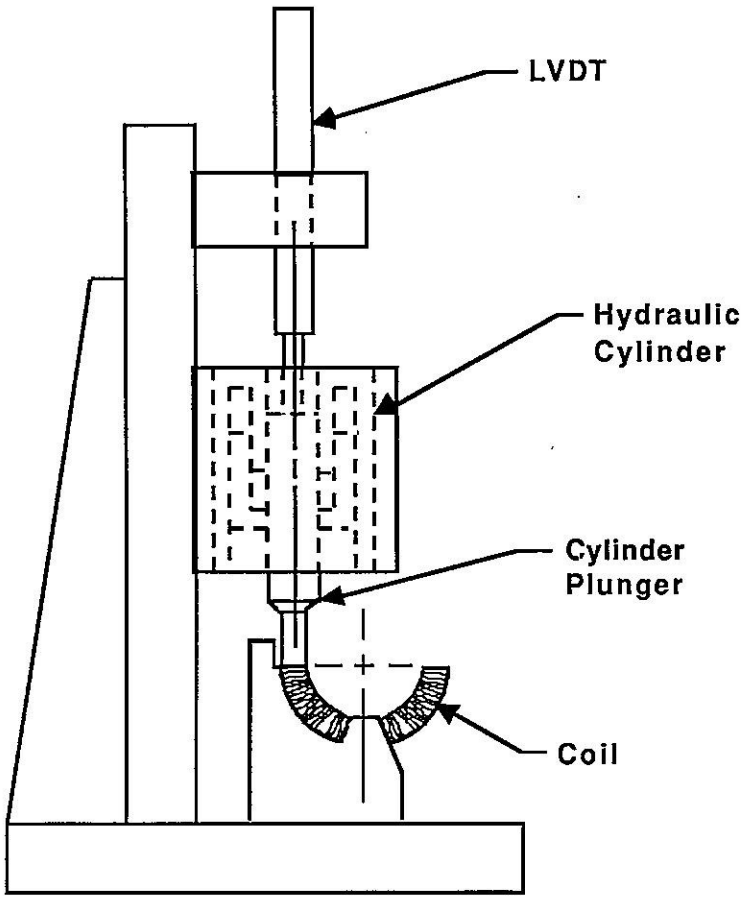

Figure 5.

Coils are measured every 3 inches at 12000 coil psi. Selected positions are measured at different pressures to determine the coil modulus.

• **Resistance Monitoring (4.2.2)**

Resistance of coils is monitored with a Valhalla 4300B digital ohmmeter and recorded during the azimuthal measuring process. If the coil resistance decreases when the pressure is applied, the coil is checked for turn-to-turn shorts.

• **Radial Measurements (4.3)**

The coil is measured radially before collaring. Measurements are taken at regular intervals along the length of the coil and recorded in the traveller. The coil is measured in it's free state at the middle of each current block as shown in Figure 6. The measurements are presently taken by hand with a micrometer.

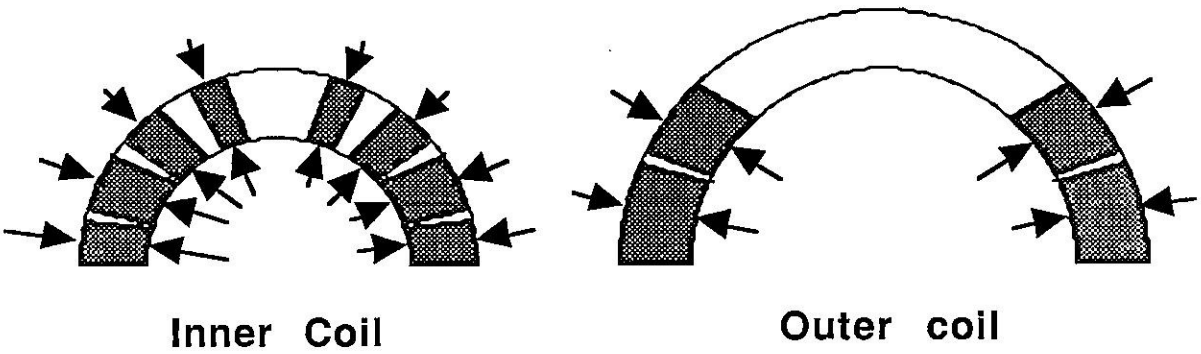

Figure 6.

Dimensional Inspection (4.4.2)

Longitudinal coil and end current block lengths are measured in the free state after curing and recorded in the traveller.

5.0 COIL PREPARATION

5.1 Voltage Taps

5.1.1 Soldering Procedures

5.1.2 Electrical Inspection

5.1.2.1 Resistance Measurement (R_S)

5.2 Spot Heaters

5.2.1 Soldering Procedures

5.2.2 Electrical Inspection

5.2.2.1 Resistance Measurement (R_S)

5.2.2.1.1 Spot Heater Measurement (R_S)

5.2.2.1.2 Spot Heater to Coil Measurement (R_S)

6.0 COLLARED COIL ASSEMBLY

6.1 Collar Packs

6.1.1 Collared Pack Assembly

6.1.1.1 Mechanical Dimensional Inspection

6.1.2 Strain Gage Pack Assembly

6.1.2.1 Electrical Inspection

6.1.2.2 Mechanical Inspection

6.2 Coil Selection/Installation

6.2.1 Coil Assignment

6.2.2 Coil Shim Sizes

6.3 Beam Tube

6.3.1 Cleaning

6.3.2 Vacuum Leak Check

6.3.3 Inside Dimensional Check

6.3.4 Length Measurement

6.4 Ground Wrap

6.4.1 Mechanical Measurements

6.4.1.1 Thickness Measurement

6.4.1.2 Length Measurement

6.4.2 Pole Tip Shim

6.4.2.1 Thickness Measurement

6.5 Heater Installation

6.5.1 Electrical Inspection

6.5.1.1 Resistance Measurement

6.5.2 Mechanical Inspection

6.5.2.1 Thickness Measurement

6.5.2.2 Width Measurement

6.5.2.3 Edge Measurement

6.6 Collar Pack Installation

6.6.1 Electrical Inspection

6.6.1.1 Resistance Monitoring (R_S)

6.6.2 Collar Pack Location

6.6.3 Collar Pack Length

6.7 Post Collaring Inspection

6.7.1 Electrical Inspection (120 Hz/1KHz)

6.7.1.1 Coil Resistance (R_S)

6.7.1.2 Coil Inductance (L_S)

6.7.1.3 Coil "Q"

6.7.2 Strain Gage Measurements

6.7.2.1 Resistance Measurements

- **Strain Gage Pack Assembly (6.1.2)**

The configuration of the coil strain gage pack assembly used on SSC dipoles is shown in Figure 7.

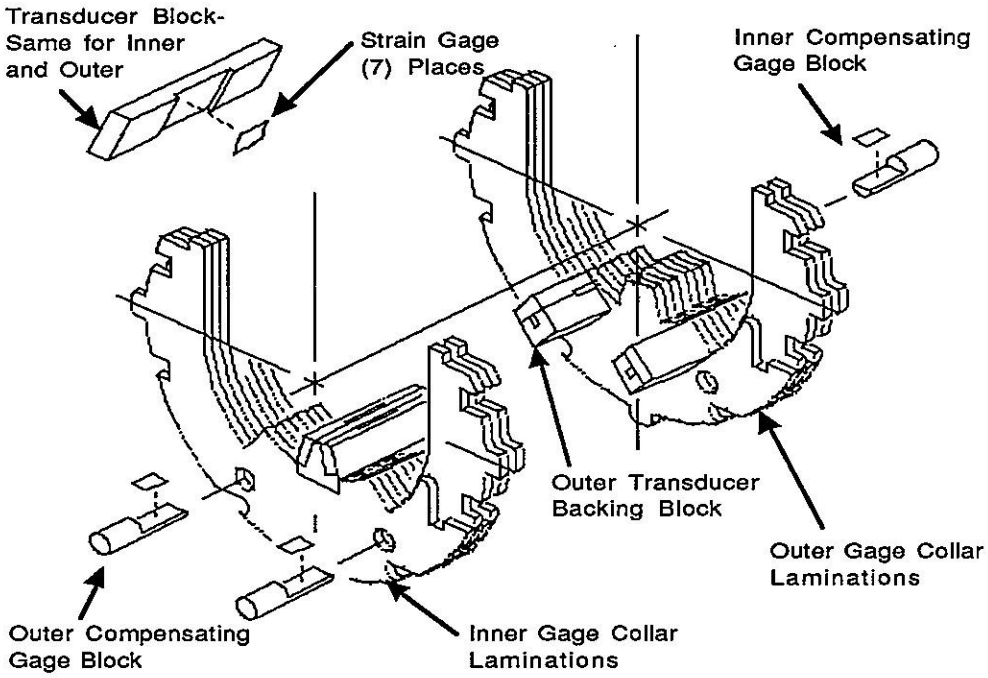

Figure 7.

• **Electrical Inspection (6.1.2.1)**

After assembly, the resistance of each gage is checked for continuity. The resistance is also measured to ground to ensure that no gages are shorted.

• **Mechanical Inspection (6.1.2.2)**

After the pack is assembled, the azimuthal position of each gage is measured. If a gage is incorrectly positioned, it is shimmed appropriately. Correct azimuthal position of the gages is essential to achieve proper coil pressure readings.

• **Coil Assignment (6.2.1)**

Coil assignment is based on the azimuthal size and modulus coil measurements. Many coils are initially wound to create a "pool" from which to choose. Coils of similar size and modulus are chosen so that the parting plane will not be offset toward the upper or lower coil.

• **Coil Shim Sizes (6.2.2)**

In a prototype program, the number of coils available is much smaller than would exist in full production. As a result it is often impossible to match them to minimize parting plane offset. Also, until several magnets have been made and measured, it is difficult to determine what the curing mold size should be to achieve the proper preload. As a result it is often necessary to shim the coils at the pole or parting plane to achieve the proper preload. The shim sizes are chosen based on a combination of coil size, preload and harmonic testing of previous magnets

• **Resistance Monitoring during collar pack installation (6.6.1.1)**

Resistance of coils and coil to ground is monitored with a Valhalla 4300B digital ohmmeter during the collar pack installation. If the coil resistance decreases when the pressure is applied, the coil is checked for turn-to-turn shorts.

7.0 COLLARED COIL KEYING

- 7.1 Tooling Setup
  - 7.1.1 Mold Inspection
  - 7.1.2 Key Inspection
  - 7.1.3 Key Installation
- 7.2 Pre-insertion
  - 7.2.1 Collared Coil Alignment
  - 7.2.2 Cable/Wire Placement
- 7.3 Keying Press Operation
  - 7.3.1 Resistance (Rs) Monitoring
  - 7.3.2 Press Gap Measurement
  - 7.3.3 Coil strain Gage Readouts
  - 7.3.4 Hipots at Pressure
- 7.4 Post Keying Inspection
  - 7.4.1 Electrical Measurement (120 Hz/1KHz)
    - 7.4.1.1 Coil Resistance (R_S)
    - 7.4.1.2 Coil Inductance (L_S)
    - 7.4.1.3 Coil "Q"
    - 7.4.1.3 Hipots
  - 7.4.2 Strain Gage Measurements
    - 7.4.2.1 Resistance Measurements
  - 7.4.3 Mechanical Measurements
    - 7.4.3.1 Collared Coil O.D. Measurements
    - 7.4.3.2 Beam Tube
      - 7.4.3.2.1 Ball I.D. Measurements
      - 7.4.3.2.2 Vacuum Leak Check

• Resistance Monitoring (7.3.1)

Two resistance measurements are made continuously during the keying operation. The entire magnet resistance is measured. Separate readings of the total upper (inner and outer together) and total lower coils are made. These readings indicate if any turn-to-turn shorts have developed during the keying process.

• **Press Gap Measurements (7.3.2)**

When a magnet is collared, the upper platten of the press must close onto stops located on the collaring tooling as shown in Figure 8. When the "gaps" between the upper platten and the tooling are zero, the collars should be closed and ready for tapered key insertion. Press gap measurements enable the technician to tell when the press is closed as well as indicate if there is anything unusual about the closure of the press.

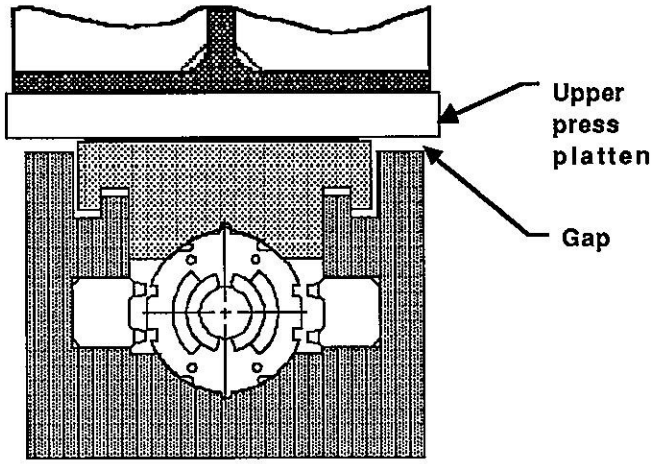

Figure 8.

Coil Strain Gage Readouts (7.3.3)

Strain gage resistances are read during keying at regular intervals. The resistances are automatically translated to coil psi and displayed so that the operator can determine whether the coil preloads are within acceptable limits.

Hipots at pressure (7.3.4)

One hipot is performed during the keying operation. The coil is hipotted to ground at 5kv just prior to the insertion of the keys. This is done when the press is at full pressure. If the coil fails the hipot, the keys are not inserted and the coil is disassembled.

Post Keying Electrical Measurements (7.4.1.1,7.4.1.2 and 7.4.1.3)

Coil resistance, inductance and "Q" are measured immediately after collaring. Measurements are taken of all four coils individually, of upper and lower coil totals and of the complete magnet. Voltage tap and heater resistances are also measured.

Post Keying Hipots (7.4.1.3)

The magnet is hipotted after keying. Hipots are:

Upper coil to lower coil --- must be less than 5 uA at 3 KV
Coil to Ground --- less than 5 uA at 5 KV
Quadrant I/IV heater to coil --- less than 5 uA at 2 KV
Quadrant II/III heater to coil --- less than 5 uA at 2 KV
Quadrant I/IV heater to ground --- less than 5 uA at 2 KV
Quadrant II/III heater to ground --- less than 5 uA at 2 KV
Spot heaters to coil --- less than 5 uA at 2 KV
Spot heaters to ground --- less than 5 uA at 2 KV

Collared Coil Outside Diameter Measurements (7.4.3.1)

Collared coils are measured at regular increments along the entire length as shown in Figure 9. This measurement determines whether the collared coil is acceptable dimensionally as well as providing a cross check of the preload as read by the coil strain gages.

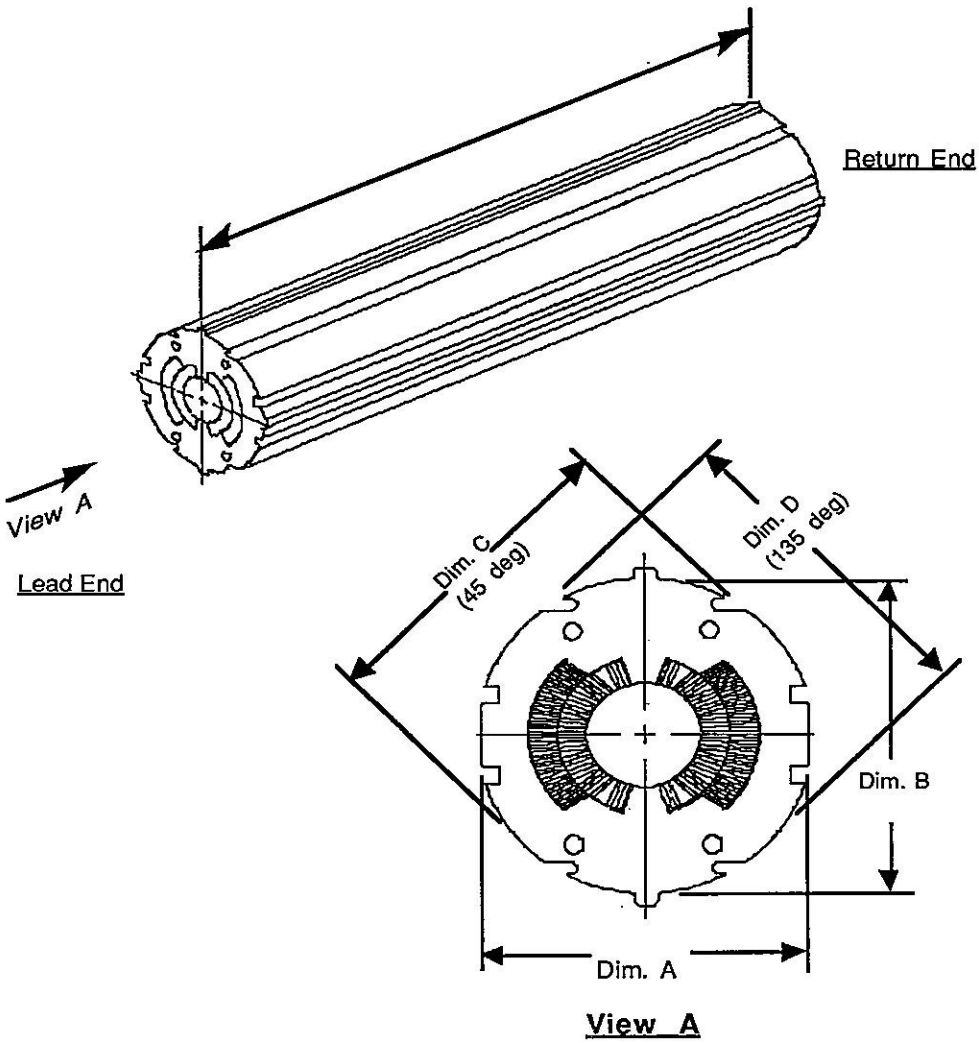

Figure 9.

8.0 COLLARED COIL END CAP ASSEMBLY

- 8.1 Return End Assembly
  - 8.1.1 Ground Wrap Installation
    - 8.1.1.1 Thickness
    - 8.1.1.2 Visual
  - 8.1.2 Installation
    - 8.1.2.1 Electrical Measurements
      - 8.1.2.1.1 Resistance Monitoring (R_S)
    - 8.1.2.2 Mechanical Measurements
- 8.2 Lead End Assembly
  - 8.2.1 Ground Wrap Installation
    - 8.2.1.1 Thickness
    - 8.2.1.2 Visual
  - 8.2.2 Installation
    - 8.2.2.1 Electrical Measurements
      - 8.2.2.1.1 Resistance Monitoring (R_S)
    - 8.2.2.2 Mechanical Measurements
  - 8.2.3 Soldering
    - 8.2.3.1 Voltage Taps
    - 8.2.3.1 Conductor Leads
  - 8.2.4 Electrical Inspection
    - 8.2.4.1 Continuity Inspection
    - 8.2.4.2 Resistance Measurements
  - 8.2.5 Insulating
- 8.3 Total
  - 8.3.1 Welding
    - 8.3.1.1 Electrical Measurements
      - 8.3.1.1.1 Resistance Monitoring (R_S)
  - 8.3.2 Electrical Inspection (120Hz/1Hz)
    - 8.3.2.1 Coil Resistance (R_S)
    - 8.3.2.2 Coil Inductance (L_S)
    - 8.3.2.3 Coil "Q"
    - 8.3.2.4 Coil "Ringing"
    - 8.3.2.5 Coil Hipots
  - 8.3.3 Instrumentation Leads
    - 8.3.3.1 Voltage Taps
      - 8.3.3.1.1 Electrical Measurements
        - 8.3.3.1.1.1 Resistance Monitoring (R_S)
    - 8.3.3.2 Spot Heaters
      - 8.3.3.2.1 Electrical Inspection
        - 8.3.3.2.1.1 Spot Heater Resistance
        - 8.3.3.2.1.2 Spot Heater to Coil Resistance
        - 8.3.3.2.1.3 Hipot
  - 8.3.4 Quench Heater Electrical Inspection
    - 8.3.4.1 Continuity Measurements
    - 8.3.4.2 Hipot
  - 8.3.5 Mechanical Inspection
    - 8.3.5.1 Length Measurement
    - 8.3.5.2 End Cap Alignment
    - 8.3.5.3 Beam Tube
      - 8.3.5.3.1 Ball I.D. Measurement
      - 8.3.5.3.2 Vacuum Leak Check

Resistance Monitoring during End Clamp Installation (8.1.2.1.1. and 8.2.2.1.1)

Two resistance measurements are made continuously during both lead and return end clamp installation. The entire magnet resistance is measured. Separate readings of the total upper (inner and outer together) and total lower coils are made. These readings indicate if any turn-to-turn shorts have developed during the installation process.

Mechanical Measurements (8.1.2.2 and 8.2.2.2)

End clamps are measured during the installation process for the purpose of determining coil preload in the ends. Return end clamps are measured three times; before installation (in the undeflected state), during and after installation. Lead end clamps are measured only twice; before and after installation. The lead end cannot be measured during installation because the measurement can take longer than the curing time of green putty. Green putty is used to pack the leads into the slots in the collets.

Diameters are measured at increments of every inch from the face plate weld at four different angles as shown in Figure 10. Pi tape (circumference) measurements are also taken at the same longitudinal locations.

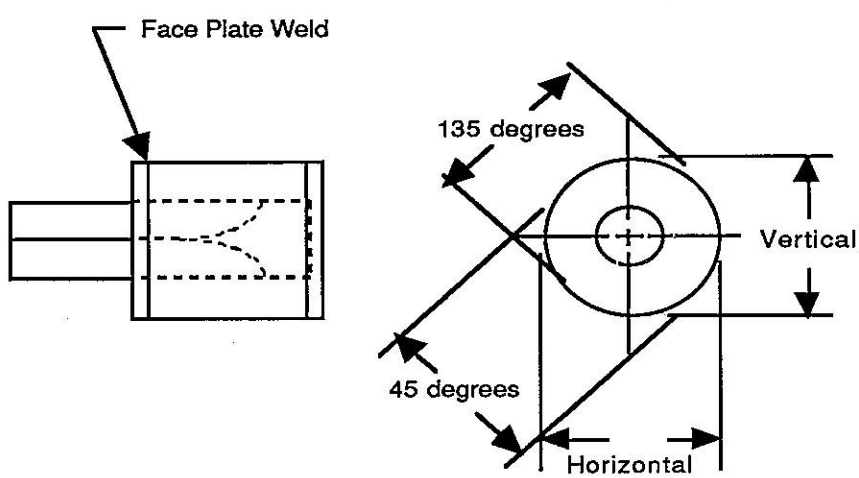

Figure 10.

Electrical Inspections (8.3.2, 8.3.3 and 8.3.4)

The full range of electrical tests are again performed on the magnet after the end clamp installation. Resistances, inductance, Q, ringing and hipots are done on the coils. Measurements are the same as stated in section 4.1 and 7.4.1.3. Strain gage measurements are taken. Voltage taps, spot heaters and quench heaters are checked for continuity and shorts.

Length Measurement (8.3.5.1)

Collared coil with end clamp length is measured with a measuring tape and recorded in the traveller.

End Cap Alignment (8.3.5.2)

End cap angular alignment is checked. Excessive misalignment of the end cap could cause problems in mounting the end preload gages (bullets). The bullet pressure plate is located azimuthally by the end cap.

9.0 COLLARED COIL HARMONICS MEASUREMENTS

- 9.1 Strain Gage Measurement
- 9.2 Mole Measurement
- 9.3 Electrical Measurement
  - 9.3.1 Resistance Monitoring (Rs)

Strain Gage Measurement (9.1)

Strain gage resistances, and hence coil preloads, are routinely measured at every stage in the magnet production.

Mole Measurement (9.2)

A probe is inserted into the completed collared coil to measure the harmonics. This is done on both the collared coil and again when the cold mass (with yoke) is complete. These measurements yield information about conductor placement, coil size and preload.

Resistance Monitoring during mole measurement (9.3.1)

Total and individual coil resistance is measured during harmonic measurements through the voltage taps. If there is a problem, the rest of the voltage taps will be read. If a short has developed, the magnet will be disassembled.

10.0 YOKE/SKINNING ASSEMBLY

- 10.1 Yoke Pack Assembly
  - 10.1.1 Length Measurement
  - 10.1.2 Weight Measurement
  - 10.1.3 Special Lamination Placement
  - 10.1.4 Cleanliness
- 10.2 Cold Mass Assembly
  - 10.2.1 Yoke Skin
    - 10.2.1.1 Cleaning
    - 10.2.1.2 Visual
  - 10.2.2 Yoke Pack Placement
    - 10.2.2.1 Serial Numbers
  - 10.2.3 Special Pack/Lamination Placement
- 10.3 Pressing procedures
  - 10.3.1 Pre-Press Electrical
    - 10.3.1.1 Coil Resistance (Rs)
    - 10.3.1.2 Coil Inductance (Ls)
    - 10.3.1.3 Coil "Q"
    - 10.3.1.4 Coil "Ringing"
    - 10.3.1.5 Hi-Pots
    - 10.3.1.6 Strain Gage Measurements
  - 10.3.2 Pressed/Pre-Welding electrical
    - 10.3.2.1 Strain Gage Measurement
    - 10.3.2.2 Resistance Measurement (Rs)
  - 10.3.3 Yoke/Skinning Press Procedure
    - 10.3.3.1 Mechanical Inspection
      - 10.3.3.1.1 Gap Inspection
  - 10.3.4 Pressed/Welding
    - 10.3.4.1 Strain Gage Measurement
      - 10.3.4.1.1 First Welding Pass
      - 10.3.4.1.2 Second Welding Pass
    - 10.3.4.2 Resistance Monitoring.(Rs)
  - 10.3.5 Pressed/Post-Welding
    - 10.3.5.1 Strain Gage Measurement
    - 10.3.5.2 Resistance Measurement (Rs)
  - 10.3.6 Post-Welding Electrical(Out of Press)
    - 10.3.6.1 Coil Resistance (Rs)
    - 10.3.6.2 Coil Inductance (Ls)
    - 10.3.6.3 Coil "Q"
    - 10.3.6.4 Coil "Ringing"
    - 10.3.6.5 Hi-Pots
    - 10.3.6.6 Strain Gage Measurement
- 10.4 Mechancial Inspection
  - 10.4.1 Length Measurements
  - 10.4.2 Beam Tube
    - 10.4.2.1 Ball I.D. Measurement
    - 10.4.2.2 Vacuum Leak Check

Length Measurement (10.1.1)

Individual yoke packs are measured with a micrometer or caliper. Control of both the length and weight measurements ensures a uniform magnetic density. Specific lengths of packs must also be controlled if a cross flow cooling system is used.

Weight Measurement (10.1.2)

Each pack is individually weighed. If is too light or too heavy, laminations are added or removed.

A specific weight per unit length must be maintained to control magnetic density. If cross flow cooling is not used, this can be achieved by applying a uniform hydraulic pressure and allowing the lengths of packs to vary, eliminating the need to weigh packs. If cross flow cooling is used, both the weight and length of packs must be precisely controlled. The 50mm SSC program is presently assuming that cross flow cooling might be used. Both weight and length of yoke packs are therefore being measured and controlled.

Special Lamination Placement (10.1.3)

Special yoke laminations may be placed between packs for cross flow cooling or helium pressure ventilation. The positions of these laminations is inspected at assembly.

Electrical (10.3)

The full range of electrical tests are again performed on the magnet at three times during the yoke and skinning process; at pre-press, after both welding passes and after the completed assembly is removed from the press. Resistances, inductance, Q, ringing and hipots are done on the coils. Strain gage measurements are taken. Measurements are the same as stated in section 4.1 and 7.4.1.3. Voltage taps, spot heaters and quench heaters are checked for continuity and shorts.

Gap Inspection (10.3.3.1.1)

A .030 gap exists by design between the skin and alignment keys before welding as shown in Figure 11. The press is energized before welding and all four gaps are measured. The press pressure is then released and the skin is rotated in the press until the four gaps are identical in size. Press pressure is then reapplied and the welding takes place.

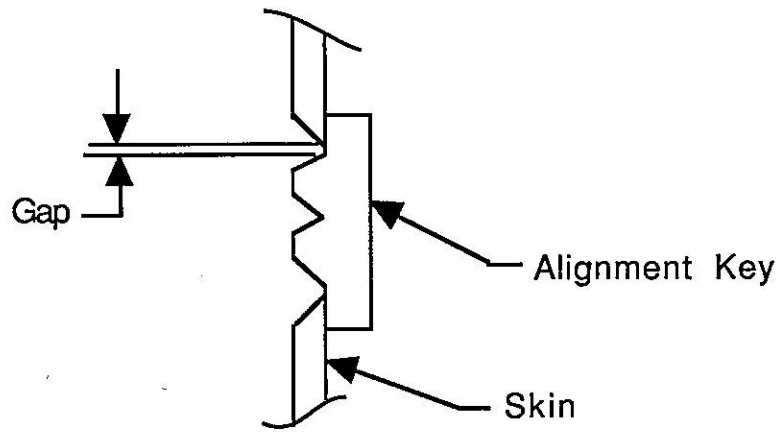

Figure 11.

11.0 INTERCONNECT AREA
- 11.1 Mechanical Measurements
  - 11.1.1 Twist Measurement (Mechanical)
  - 11.1.2 Diameter Measurement
  - 11.1.3 Vertical Axis (Magnetic) Measurement
- 11.2 Yoke Skin
  - 11.2.1 Yoke Skin Prep
    - 11.2.1.1. Overall Length Measurement
    - 11.2.1.2 Yoke Skin to Collared Coil Measurement
- 11.3 Bonnet Installation
  - 11.3.1 Welding Procedure
    - 11.3.1.1 Bonnet, Studs, Center Cradle, BT Vent Tube
      - 11.3.1.1.1 Length Measurement
    - 11.3.1.2 Visual Inspection
- 11.4 Vacuum Leak Check
- 11.5 Pressure Check
  - 11.5.1 3 ATM Pressure
- 11.6 Hi-Pressure Inspection
- 11.7 Bullet Ring Check
  - 11.7.1 Resistance Inspection
- 11.8 Bus Installation (Pultrusions)
  - 11.8.1 Bus Assembly
  - 11.8.2 Bus Inspection
    - 11.8.2.1 Electrical Inspection
      - 11.8.2.1.1 Continuity Measurement
      - 11.8.2.1.2 Hypot

11.9 End Plate Installation
- 11.9.1 Strip Heater Termination
  - 11.9.1.1 Visual Inspection
- 11.9.2 Spot Heater Termination
  - 11.9.2.1 Visual Inspection
- 11.9.3 Voltage Tap Termination
  - 11.9.3.1 Visual Inspection
- 11.9.4 Strain Gage Termination
  - 11.9.4.1 Visual Inspection

11.10 Beam Tube
- 11.10.1 Mechanical Inspection
  - 11.10.1.1 End Relationship Measurement
- 11.10.2 Install Beam Tube Flange/Bellows
  - 11.10.2.1 Welding Procedure
  - 11.10.2.2 Vacuum Leak Check

11.11 Expansion Joint
- 11.11.1 Assembly
- 11.11.2 Installation

Twist measurement (Mechanical) (11.1.1)

The cold mass twist is measured by use of the alignment keys as shown in Figure 12. Maximum Twist is specified as xxxx mrad over the entire length to allow for proper alignment in the tunnel.

A mechanical fixture is attached to the cold mass which locks into the alignment keys. A digital level is placed on the fixture. Readings are taken every 12 inches and recorded.

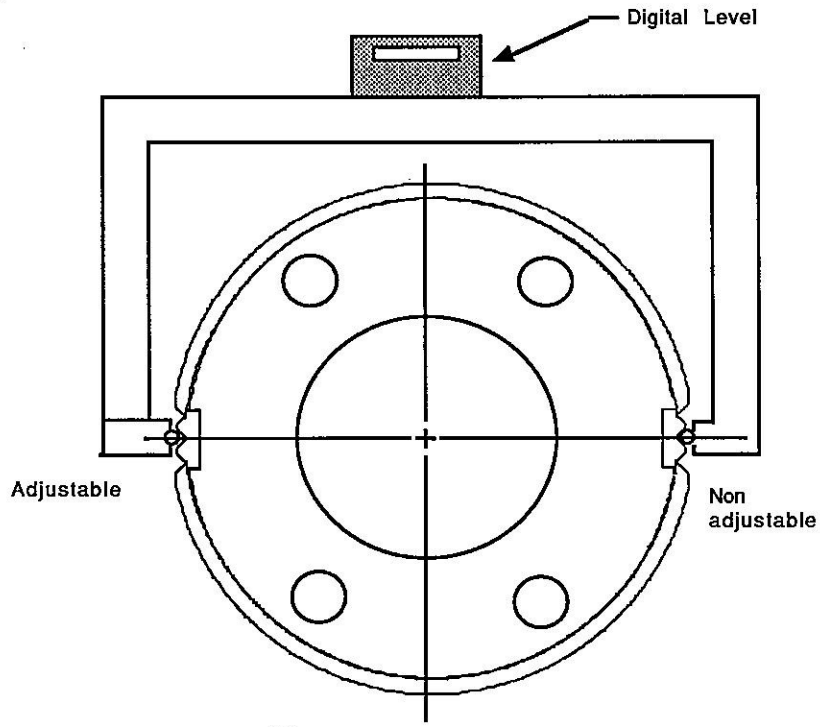

Figure 12.

Vertical Axis (Magnetic) Measurement (11.1.3)

A vertical plane probe is used to measure the vertical axis of the coil at various positions along the length of the cold mass. These measurements can be used to verify the mechanical twist measurements taken in section 11.1.1.

Length Measurements (11.2.1.1, 11.2.1.2, and 11.10.1.1)

Length measurements are routinely taken at varoius stages in the cold mass assembly to ensure that nothing has been assembled incorrectly. These measurements also ensure that the magnet will fit correctly into the cryostat and test stand.

Electrical Inspection (11.8, 11.8.2.1.1 and11.8.2.1.2)

All components that are added during the interconnection assembly are checked for continuity and shorts.

12.0 COLD MASS INSPECTION
- 12.1 Laser Optical Survey
- 12.2 Electrical Measurements
  - 12.2.1 Coil Resistance (Rs)
  - 12.2.2 Coil Inductance (Ls)
  - 12.2.3 Coil "Q"
  - 12.2.4 Hi-Pots
- 12.3 Instrumentation Leads
  - 12.3.1 Voltage Taps
    - 12.3.1.1 Electrical Inspection
      - 12.3.1.1.1 Resistance Measurements (Rs)
  - 12.3.2 Spot Heaters
    - 12.3.2.1 Spot Heater Resistance
    - 12.3.2.2 Spot Htr to Coil Resistance
    - 12.3.2.3 Hi-Pot
- 12.4 Vacuum Leak Check
  - 12.4.1 Cold Mass Inspection
  - 12.4.2 Beam Tube Inspection

Laser Optical Survey (12.1)

The cold mass is optically measured to determine straightness and to measure the position of the beam tube with respect to the alignment keys.

Electrical Measurements (12.2 and 12.3)

All electrical test are again performed on the completed cold mass. Resistances, inductance, Q, ringing and hipots are done on the coils. Strain gage measurements are taken. Bullet resistances are read. Measurements are the same as stated in section 4.1 and 7.4.1.3. Voltage taps, spot heaters, quench heaters and all other instrumentation and electrical components are checked for continuity and shorts.

13.0 COLD MASS HARMONICS MEASUREMENT
- 13.1 Strain Gage Measurement
- 13.2 Mole Measurement
- 13.3 Cold Mass Measurements
  - 13.3.1 Electrical Measurement
    - 13.3.1.1 Resistance Monitoring (Rs)

Cold Mass Harmonics Measurement (13.0)

Harmonics measurement are done both on the collared coil (without yoke) and on the completed cold mass. These measurements are identical to those described in section 9.0.

14.0 CRYOSTAT ASSEMBLY
- 14.1 Reentrant Support Post
  - 14.1.1 Post Assembly
  - 14.1.2 Post Installation
- 14.2 Hybas Tie Bar
  - 14.2.1 Tie Bar Assembly
  - 14.2.2 Tie Bar Installation
- 14.3 MLI Insulating Blankets
  - 14.3.1 Assembly
    - 14.3.1.1 Layer Procedure
    - 14.3.1.2 Layer Inspection
    - 14.3.1.3 Sewing Procedure
    - 14.3.1.4 Sewing Inspection
- 14.4 20K/80K Shield Installation
  - 14.4.1 Welding Procedure
  - 14.4.2 MLI Blanket Installation
- 14.5 Gas/Liquid Shield Tubes
  - 14.5.1 Vacuum Leak Check

14.8 Inspections
- 14.8.1 Mechanicals
  - 14.8.1.1 V-Plane Measurement
- 14.8.2 Electrical Inspection (120 Hz/1 KHz)
  - 14.8.2.1 Cold Mass Resistance (Rs)
  - 14.8.2.2 Cold Mass Inductance (Ls)
  - 14.8.2.3 Cold Mass "Q"
  - 14.8.2.4 Cold Mass "Ringing"
  - 14.8.2.5 Cold Mass Hi-Pots
- 14.8.3 Survey and Alignment
- 14.8.4 Visual Inspections

14.9 Vacuum Vessel Assembly
- 14.9.1 Welding Procedure
- 14.9.2 Survey and Alignment
- 14.9.3 Vacuum Inspection
  - 14.9.3.1 Cleaning Procedures
  - 14.9.3.2 Packaging Procedures

MLI Layer Inspection (14.5.1.2)

The total thickness of MLI is checked against the design to ensure that the shields will fit properly.

Vertical Plane Measurement (14.8.1.1)

A vertical plane probe is used to measure the vertical axis of the magnetic field with respect to the exterior of the cold mass. This information is used to position the cold mass azimuthally in the center post cradle.

Electrical Inspection (14.8.2)

All electrical inspections are performed after the cryostat is complete. They are identical to those in section 12.2 and 12.3.

Survey and Alignment (14.8.3 and 14.9.2)

Cryostat and cold mass components are surveyed longitudinally and laterally. Measurements determine the shimming of bottom of post supports for installation in the tunnel.

15.0 FINALS

15.1 Inspections

15.1.1 Electrical Inspection (120 Hz/1 KHz)

15.1.1.1 Cold Mass Resistance (Rs)

15.1.1.2 Cold Mass Inductance (Ls)

15.1.1.3 Cold Mass "Q"

15.1.1.4 Cold Mass "Ringing"

15.1.1.5 Cold Mass Hi-Pots

15.1.2 Mechanical Measurements

15.1.3 Laser Optical Survey

15.1.3.1 Cold Mass

15.1.3.2 Vacuum Vessel

15.1.4 Vacuum Leak Testing

15.1.4.1 Vacuum Vessel

15.1.4.2 Beam Tube

15.1.4.3 Cold Mass

Electrical Inspection (15.1.1)

All electrical inspections are done on the final magnet assembly immediately before shipping. They are identical to those described in section 14.8.2.

16.0 SHIPPING

16.1 Documentation

16.2 Protective Covers

17.0 MISCELLANEOUS

17.1 Calibration Procedures

17.1.1 Electrical Equipment

17.1.2 Vacuum Leak Check Equipment

17.1.3 Mechanical Measuring Equipment

17.1.4 Optical Alignment Equipment