5/2/90

FROM: Rodger Bossert

TO: Fred Nobrega

CC: Jeff Brandt, John Carson, Wayne Koska, Paul Mantsch, Gale Pewitt, Jim Strait.

SUBJECT: SSC 50mm End Magnetic Design

The longitudinal position of each G-10 part in a magnet end must be determined before the cable paths can be designed. These positions are typically defined for magnetic reasons. This is being done for the 50mm SSC dipole by Shlomo Caspi of LBL and Greg Lee of FNAL. On May 1 they produced what is called "iteration #2". Shlomo is not very happy with it and says that he will have a far superior iteration in less than a week. We would nevertheless like to get started designing something now. We will therefore begin end design immediately with iteration #2. When iteration #3 appears we will make a determination at that time as to whether incorporating it will impact our schedule.

The following sketch shows the longitudinal positions of the end parts in iteration #2. The positions are defined by what we call "A" lengths. An "A" length is the length from the center of turn of the cable to the beginning of a current block.

R. Bossert 5-2-90

Magnetic "A" lengths for 50mm SSC Dipole Iteration #2

Inner Coil

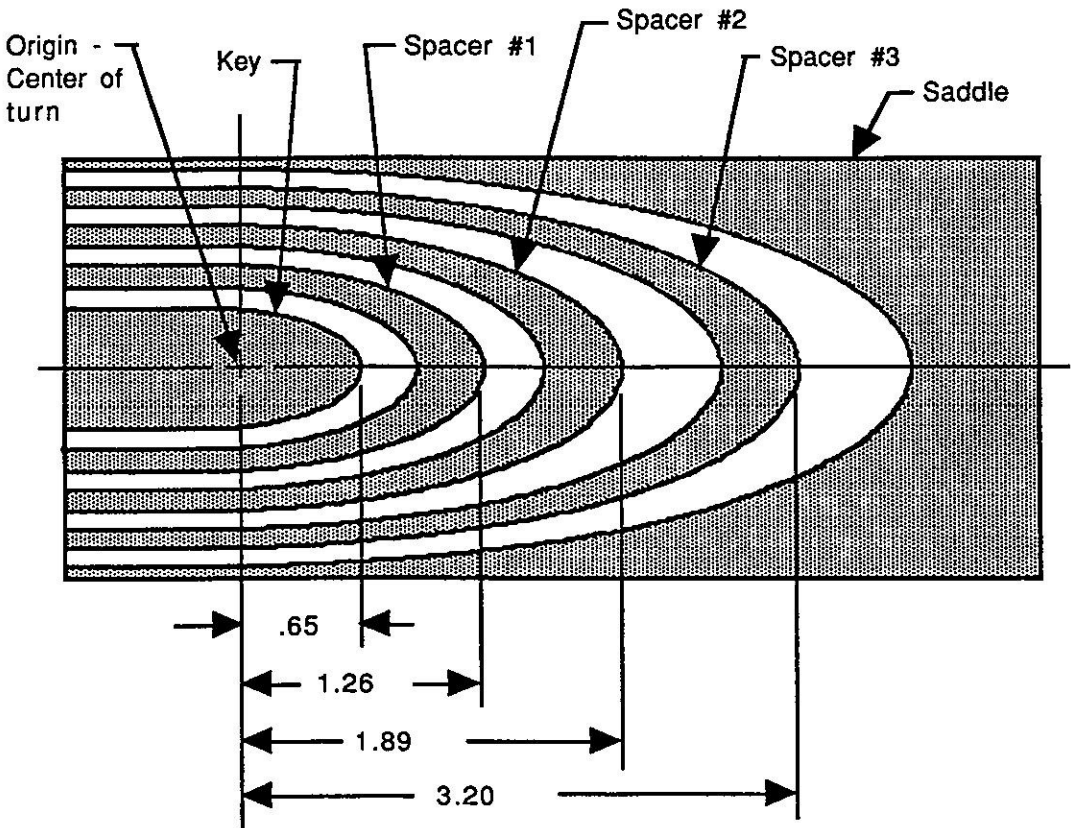
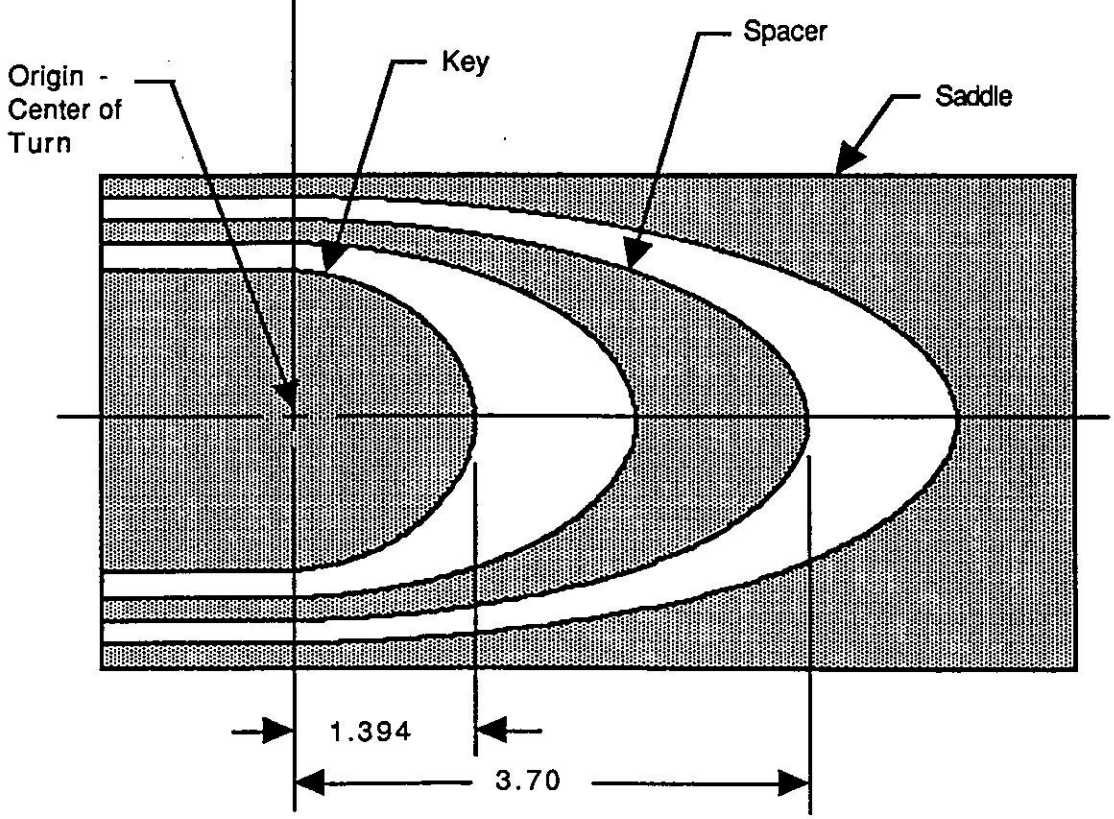
Outer Coil