TS-SSC 90-012

4/27/90

TO: David Orrell
FROM: Jim Strait
SUBJECT: Vertically split 50 mm yoke dimensions

Attached are drawing showing dimensions of the horizontal yoke-collar alignment tab, the yoke-yoke alignment key notch on the vertical mid-plane and the cutout at the outer radius of the vertical mid-plane for the full-length fiducial bar. (The dimensions are inches.) Despite the fact that I said earlier that the size of the horizontal tab could be adjusted for the sake of the magetic design, in fact it is basically fixed. At 150 mils, the width is about as small as we are comfortable with and it cannot be increased and still allow insertion of the tapered keys with our tooling. It also seems unwise to make the aspect ratio of this tab very far from 1:1. (If this is a major problem for the magnetic design we can obviously change it, but I do not imagine that it is.) The yoke-yoke alignment notch is about as small as we want to make it and the distance between it and the bus slot is at the minimum value allowed if we are going to leave open the possibility of punching 1/4" laminations. The fiducial bar slot is larger than in the 40 mm design and matches the low-beta quads. The larger fiducial will allow better alignment of the yokes in the yoking and skinning tooling. I do not, of course, guarantee that these dimensions are correct and final. In particular I have not run them past Bill Robotham (the engineer in charge of these drawings) or Roger Zink.

cc: Rodger Bossert
John Carson
Jim Kerby
Bill Robotham
Roger Zink

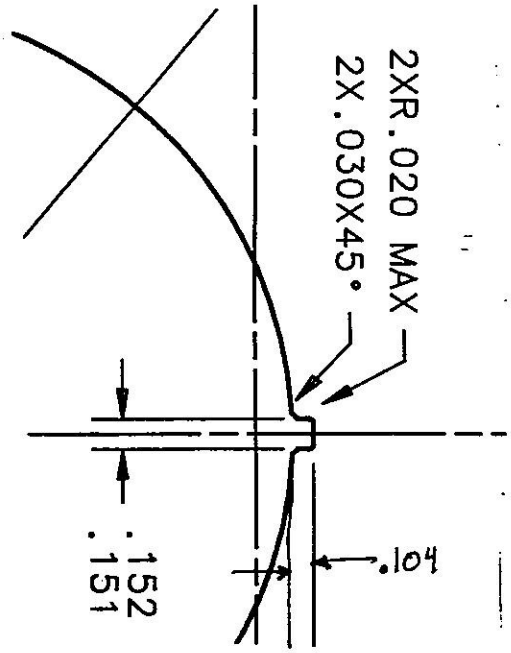

Horizontal Mid-plane tab

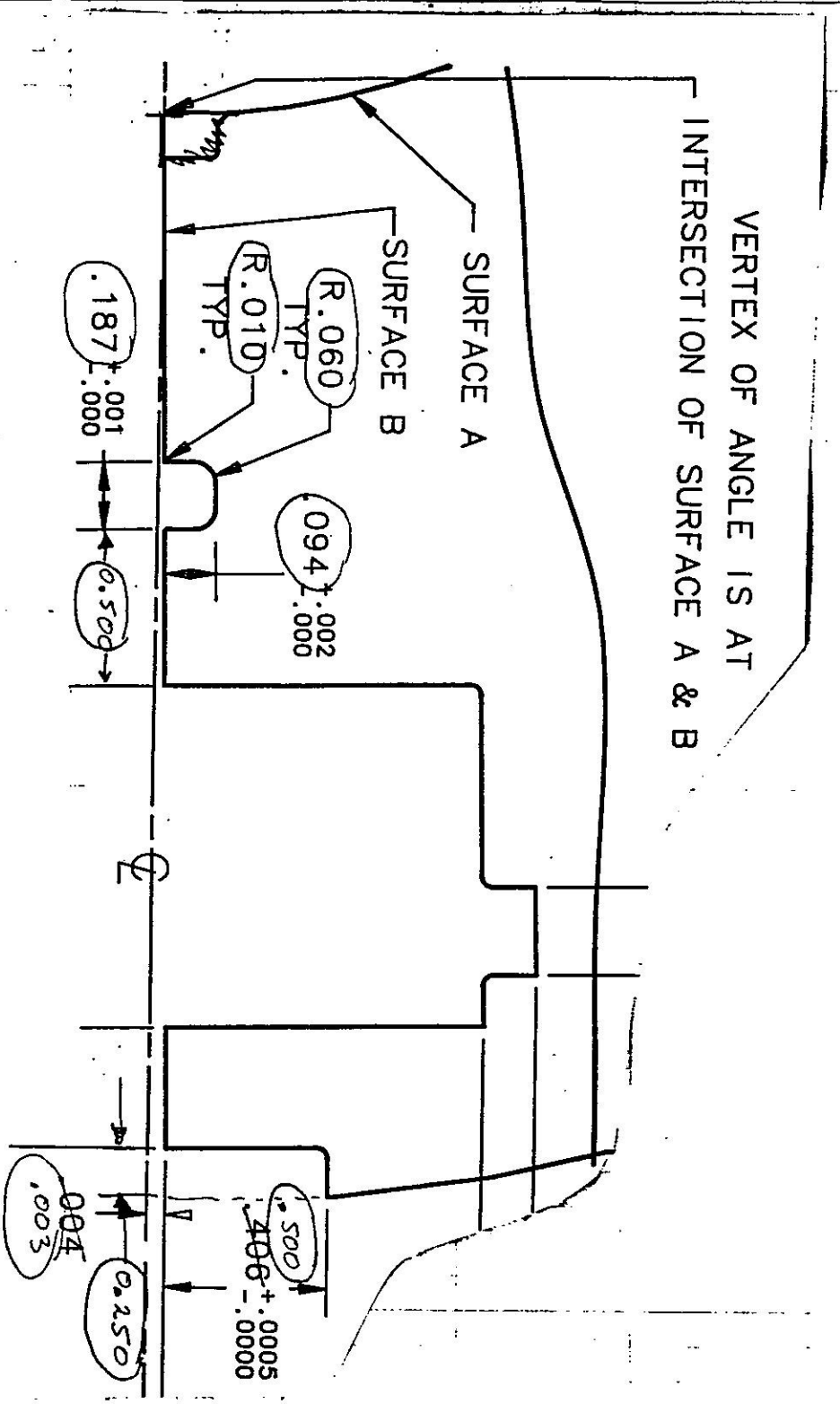

Yoke-yoke alignment key and Fiducial bar dimensions

25 JULY 1990

TESTING A Q4 MAGNET

("REDUCED" TEST PLAN AS ACTUALLY EXECUTED LAST WEEK)

DAY #	TASK	REMARKS
1 & 2	DISMOUNT/MOUNT	REMOVE PREVIOUS MAGNET AND INSTALL MAGNET. TEST SYSTEM AVAILABLE FOR SPOOLS.
2 - 3	COOLDOWN	SWITCH REFRIGERATOR TO SSC MODE 10 HOUR COOLDOWN "OVERNIGHT"; PRECLUDES SPOOL WORK.
3	QUENCH TESTS	START 4 AM; FINISH 9 PM. - TRAINING @ 25 A/S. ABOUT 10 QUENCHES NEEDED. - QUENCH VS RR @ 75, 100, 200 A/S. - SHOW BOTH HEATERS WORK. - COLLIDER MODE ENDURANCE. - A "MIITS QUENCH".
3 - 4	MAG MEASUREMENTS	START 9 PM DAY 3, FINISH END OF DAY 4, HAD SOME GLITCHES... - HARMONICS. - X,Y CENTER. - INTEGRATED FIELD. - FIELD ANGLE.
5	SURVEY	TWO SURVEYS, @ 6 HOURS. TEST SYSTEM AVAILABLE FOR SPOOLS.
5 - 6	WARMUP	24 HOURS, STARTING EVENING OF DAY 5.

****

FINISHED IN 6 DAYS, 1 DAY AHEAD OF SCHEDULE. USED COLD TEST SYSTEM ONLY 2 DAYS, SO ADEQUATE TEST TIME TO DO 2 SPOOLS THAT WEEK TOO.