Expression of Interest to the

Superconducting Super Collider Laboratory

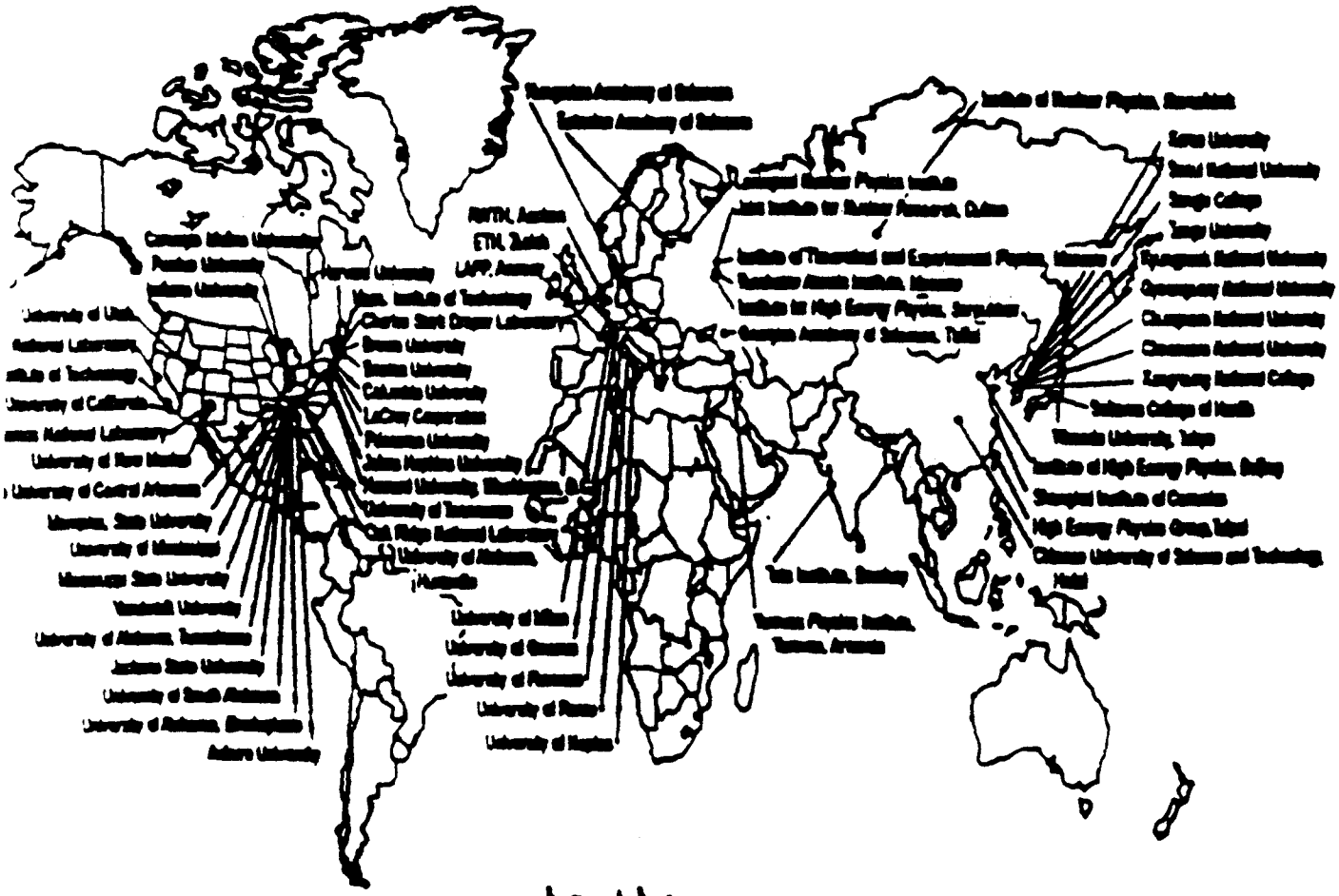

by the

L★ COLLABORATION

May 1990

Expression of Interest

to the Superconducting Super Collider Laboratory by the L* Collaboration

May 1990

The University of Alabama, Tuscaloosa, Alabama, USA
L.Bakaby, J.Buscemi, D.DiBiasio, L.Junkins, X.Liu, T.Pennington, M.Timko, D.Whitcomb, L.Wurtz, Y.Yu

The University of South Alabama, Mobile, Alabama, USA
K.Clark, M.Jenkins

The University of Alabama, Huntsville, Alabama, USA
J.Gregory, Y.Takahashi

The University of Alabama, Birmingham, Alabama, USA
J.Harrison, E.Robinson

Auburn University, Auburn, Alabama, USA
J.Williams

The University of Central Arkansas, Conway, Arkansas, USA
H.Woolverton

Lawrence Livermore National Laboratory, Livermore, California, USA
E.Ables, R.Blonz, H.Brill, A.Chargin, G.Dale, O.Edwards, O.Fackler, J.Heim, C.Herring, D.Matlowski, J.Miller, M.Mugge, W.Neff, H.S.Park, S.Shen, S.Sterzenowski, K.Studna, D.Stack, W.Sollitt, R.Vitali

California Institute of Technology, Pasadena, California, USA
M.Chen, G.Gratta, D.Kirby, R.Mount, H.Newman, R.Y.Zhu

University of California, San Diego, California, USA
J.B.Branson, M.Hebert, E.Shear, X.Sopczak

Purdue University, Lafayette, Indiana, USA
A.Sulak, L.Gutay, T.McMahon

Indiana University, Indiana, USA
M.Gebhard, R.Heinz, A.Kornieve, L.Miller, S.Mutson, J.Musser, G.Spiczak, G.Turner

Johns Hopkins University, Baltimore, Maryland, USA
H.Akbari, J.Bao, C-Y.Chien, G.Feldman, T.Fulton, C.W.Kim, J.F.Krizmanic, J.D.Orcutt, A.Pevsner, W.J.Spangler, C.Spartalis, A.Szalay

Boston University, Boston, Massachusetts, USA
S.Ahlen, G.Bauer, J.Bazzy, J.Brooke, T.Coan, M.Felcini, J.Hu, D.Levin, W.Lu, A.Marin, S.Ostrowski, D.Osborne, J.Rohlf, D.Warner, B.Zhou

Harvard University, Cambridge, Massachusetts, USA
K.Kamer, P.McBride, J.Schuster, K.Strauch

Massachusetts Institute of Technology, Cambridge, Massachusetts, USA
A.L. Anderson, U.Becker, P.Berges J.D.Burger, Y.H.Chang, M.Chen, L.Clare, R.Clare, T.S.Dai, F.J.Eppling, M.Fukushima, M.P.J.Gaudreau, K.Gibat, C.Grimm, E.S.Hafen, P.Hartwig, G.Herten, A.Kamen, T.Kramer, T.Lainus, D.Luckey, P.Marsen, D.B.Montgomery, L.A.Plass, J.M.Olsen, M.Saraiva, S.M.Shostin, M.Steuer, J.D.Sullivan, K.Sumorok, J.Tang, Samuel C.C. Ting, S.M.Ting, T.J.Wenaus, M.White, S.X.Wu, S.Wyatouch, C.H.Ye

The Charles Stark Draper Laboratory, Cambridge, Massachusetts, USA
R.Arrajo, J.Barry, E.Bert, M.Fury, M.Hanesberry, T.Hines, G.Holden, F.Nimeter, J.Paradiso, W.Toth, L.Wilk

University of Mississippi, University, Mississippi, USA
L.Cremaldi, J.Furgeson, S.Harper, J.Reidy, J.Zhang

Mississippi State University, Starkville, Mississippi, USA
L.Croft, S.Pierce

Jackson State University, Jackson, Mississippi, USA
F Loz

Princeton University, Princeton, New Jersey, USA
J.Bakken, M.Convery, P Denes, D.Lee, P. Piroué, K.Reed, H.Siccotte, D.Stickland, R.Sumner, D Wright

Los Alamos National Laboratory, New Mexico, USA
D Alde, R Barber, J Boissevain, D.Campbell, T.Carey, G.Dransfield, R.Farber, P.Ferguson, V.Gavron, D.Giovanelli, R.Gupta, J Hanlon, S.Hecker, C.Hosford, J.Kapustinsky, W.W.Kinnison, E.Knapp, B.Kortegaard, R.Kruger, K.Lackner, A.Lapedes, D M.Lee, M Leitch, R.Lemons, R.Little, T Lopez, M.Matis, M.Merrigan, D.Metzger, W.O.Miller, G.Mills, F A.Morse, J.M.Moss, E.Mottola, M.Merrigan, S.Newfield, R.Perkins, R.Prest, W.Rodriguez, S.P.Rosen, C.Sadler, V.D.Sandberg, G.H.Sanders, D.Sharp, R.Slansky, B.Smith, W.Sommer, G.Stephenson, D.Strottman, J.Sunier, T.Thompson, G.T.West, D.H.White, J.Williams, W.Wilson, K.Wolcshun, H.J.Zlock

University of New Mexico, New Mexico, USA
J.Ellison, D.Finley, S.Humphries, B.H.Wildenthal

Columbia University, New York, USA
E.Aprile, Reshmi Mukherjee

LeCroy Corporation, Chestnut Ridge, New York, USA
M.Gorrica, B.Manor, R.Sumner.

Carnegie Mellon University, Pittsburgh, Pennsylvania, USA
I.Brock, A.Engler, T.Fergusson, R.W.Kraemer, F.Linde, C.Rippich, J.Smith, R.Sutton, H.Vogel

Brown University, Providence Rhode Island, USA
M.Aryal, A.De Silva, D.Rosal, M.Widgoff

University of Tennessee, Knoxville, Tennessee, USA
S.C.Berridge, W.M.Bugg, G.T.Condo, Y.C.Du, T.Handler, H.J.Hargis, E.L.Hart, R.Kroeger, A.Weidemann

Memphis State University, Memphis, Tennessee, USA
D.Franceschetti, S.Jahan, W.Jones

Vanderbilt University, Nashville, Tennessee, USA
S.Cooma

Oak Ridge National Laboratory, Oak Ridge, Tennessee, USA
D.J.Alexander, B.R.Appleton, P.E.Arakawa, J.B.Ball, F.E.Barnes, J.M.Barnes, M.L.Bauer, R.L.Beatty, J.A.Blank, L.A.Boatner, C.Bottcher, H.R.Brashear, C.R.Brinkman, T.J.Burns, J.G.Carter, B.C.Chakoumakos, M.M.Chiles, J.E.Choate, L.G.Christophorou, F.E.Close, H.O.Cohn, R.I.Crutcher, F.C.Davis, R.E.DePew, J.H.DeVan, T.H.Dunigan, M.S.Emery, H Feldes, T.A.Gabriel, T.A.Herrick, M.J.Hollis, D.T.Ingersoll, J.O.Johnson, J.W.Johnson, H.E.Knee, D.P.Kuban, R.J.Lauf, D.L.McCorkle, S.A.McElhaney, D.L.McElroy, J.W.Moore, F.Plasil, R.T.Primm III, M.J.Rennich, R.T.Santoro, T.E.Shannon, B.H.Singletary, V.K.Sikka, T.P.Sjoreen, M.S.Smith, J.W.Stapleton, M.R.Strayer, R.W.Swindeman, A.W.Trivelpiece, J.R.Tubb, J.F.Wendelken, D.M.Williams, A.C.Williamson, A.Wiesenberg, C.Y.Wong, K.G.Young

University of Utah, Salt Lake City, Utah, USA
H.Bergeson, M.Salaman

Howard University, Washington DC, USA
R.M.Catchings, J.Lindesay

University of Geneva, Geneva, Switzerland
M.Bourquin

Swiss Federal Institute of Technology, Zürich, Switzerland
H.Anderhub, J.Behrens, A.Biland, M.Dhina, G.Faber, M.Fabre, R.Fabbretti, K.Freudenreich, M.Haenell, H.Hofer, I.Horvath, E.Isiksal, M.Jongmanns, H.Jung, J.Lattry, P.Lecomte, P.LeCoultre, L.Li, X.Lua, M.MacDermott, M.Macfinbay, D.McNally, M.Pohl, G.Rahal-Callot, P.Razis, H.Rykaczewski, D.Ren, B.Spiess, H.Suter, J.Ulbricht, G.Viertel, H.VonGunten, S.Waldmeier, J.Weber, L.Zehnder

LAPP, Annecy, France
J.J.Blaising, R.Morand, M.Schneegans, M.Vivargent

Physics Institute, RWTH Aachen, Germany
P.Blömeke, M.Buchholz, E.Coulig, H.Haan, K.Hilgers, W.Karpinski, H- H.Kleinmanns, O.Kornadt, W.Krenz, T.Lehmann, K.L.Lübelsmeyer, T.Meinholz, D.Pandoulas, J.Y.Pei, M.Rhöhner, R.Siedling, D.Schmitz, K.Schmiemann, M.Schöntag, A.Schultz von Dratzig, J.Schwenke, G.Schwering, M.Toporowsky, W.Waltraff, W.Xiao, Y.Zang, J.Zhou

Central Research Institute for Physics of the Hungarian Academy of Sciences, Budapest, Hungary
Gy.Bencze, E.Dénes, E.Nagy, J.Tóth, L.Urbán

INFN and University of Florence, Florence, Italy
A.Baldini, M.Boccolari, M.Bruzzi, A.Cartacci, G.Ciancaglini, C.Civinini, R.D'Alessandro, E.Gallo, M.Meschini, M.Pieri, P.Spillantini, J.F.Wang

INFN and University of Milan, Milan, Italy
E. Borchi, A. Penzo, P. G. Rancoita, L. Riccati, A. Villari, L. Viemani

INFN, Naples and University of Naples, Naples, Italy
A. Alocco, M. G. Alviggi, E. Bramanti, G. Chiefari, R. De Asmundis, E. Drago, V.Innocente, S. Lanzano, L. Merola, M. Napolitano, S. Pancotti, C. Sciacca

University of Rome, Rome, Italy
L. Barone, S. Borgia, F. Cassarini, F. De Notaristefani, E. Longo, G. Mirabelli, S. Morganti

Tata Institute of Fundamental Research, Bombay, India
T.Aziz, S.Banerjee, S.R.Chendvankar, S.N.Ganguli, S.K.Gupta, A.Guha, A.K.Jain, P.K.Malhotra, K.Mazumdar, R.Raghavan, K.Shankar, K.Sudhakar, S.C.Tonwar

Joint Institute for Nuclear Research (JINR), Dubna, USSR
E.Belyakova, A.Chepistov, A.Chesmukhin, S.Dolya, V.Dunin, Yu.Erchov, N.Fedosov, A.Feshchenko, V.Ganchev, L.Gashtov, I.Golutvin, N.Gorbunov, L.Gramenitsky, L.Ivanchenko, M.Kadykov, V.Kalegin, A.Karev, V.Karzhavin, M.Kazarnov, S.Khabarov, V.Khabarov, Yu.Khyuzhin, D.Klaa, V.Krivozhizhin, V.Kukhlin, R.Lednicky, L.Lukyanov, V.Lysyakov, A.Matchanov, V.Minashin, N.Nogayasev, V.Odinaev, V.Peretygin, D.Peshekhonov, V.Peshekhonov, D.Pose, V.Prikhodko, A.Proskin, A.Rashevsky, I.Savin, S.Sergeev, M.Shabratov, L.Shipov, A.Skrypnik, G.Smirnov, D.Smolin, V.Svintsov, G.Sukhanov, A.Vishnevsky, Yu.Yatsunenko, O.Zaimidoroga, M.Zamyatin, A.Zarubin, V.Zhilisov, E.Zubarev

Leningrad Nuclear Physics Institute, Leningrad, USSR
V.Andreev, A.Denisov, Y.Dokshitzer, V.Ivochkin, V.Janovsky, A.Kaschuk, V.Khozin, A.Krivshich, P.Levichenko, V.Mayorov, A.Nadtochy, V.Razmyslovich, Y.Ryabov, V.Samsonov, A.Sarantsev, V.Schegelsky, A.Schedrovsky, Y.Solomonov, A.Shevel, N.Smirnov, E.Spiridenkov, V.Suvorov, A.Tsaregorodtsev, G.Velichko, S.Volkov, A.Vorobyov, An.Vorobyov, Y.Zaitsev

Institute of Theoretical and Experimental Physics, ITEP, Moscow, USSR
A.Arefiev, A.Artemenkov, A.Babaev, V.Bocharov, S.Burov, N.Byerov, M.Chumakov, A.Dolgolenko, V.Dolgoshein, V.Efremenko, V.Epshtein, A.Egiazarov, A.Fedotov, Yu.Galaktionov, V.Gemanov, P.Gorbunov, A.Gordeev, S.Gorelov, P.Gorichev, Yu.Gorodkov, E.Grigoriev, R.Gurin, Yu.Kamyanov, V.Khovansky, Yu.Kirillov, A.Klimenov, Yu.Kornilova, V.Kouzeneva, A.Kovalenko, S.Krutenkin, M.Kubantsev, A.Kuchinskiy, A.Kurin, V.Lebedenko, L.Makhaeva, A.Malinin, S.Mamonov, A.Masterenkov, V.Morgunov, A.Nikitin, N.Panikin, V.Pianikov, V.Plyaskin, V.Polubarov, A.Rozhkov, M.Ryabinin, I.Sazaty, A.Savin, M.Savitsky, A.Selivanov, V.Semachkin, V.Shamanov, P.Shastov, S.Shevchenko, V.Shevchenko, K.Shmakov, V.Shoutko, E.Shumilov, A.Smirnov, M.Solovov, S.Solomenkov, E.Tarkovsky, V.Tchudakov, L.Vasilevsky, V.A.Vinogradov, V.S.Vinogradov, L.Vorobiev, V.Zaitsev, O.Zelobenko, B.Zelobenko, N.Zhvakov

Kurchatov Atomic Institute, Moscow, USSR
S.Barabanov, A.Barkov, S.Belyaev, L.Bragin, N.Chernopitsky, T.Chunyasova, T.Devizyan, G.Dorofeyev, V.Drozdov, V.Evdokimov, S.Fralov, E.Gorbunov, E.Grishin, A.Imanov, V.Karpov, L.Karpunin, E.Kharitonov, A.Kocharyan, V.Krupov, V.Kulyasov, Yu.Kurochkin, A.Kuznetsov, S.Lakshinov, O.Lushchikova, Yu.Luchkovsky, A.Malakhov, V.Marchenko, V.Marchenko, N.Marchenko, V.Marchenko, A.Matveyev, V.Matvienko, E.Mukhin, A.Myagkov, S.Novikov, A.Ogloblin, L.Overchenkov, S.Osetrov, V.Pantsyrev, V.Pobedinsky, K.Polulyakh, V.Pontusovsky, G.Razbirin, N.Rodina, V.Rybakov, A.Salronov, M.Sadov, V.Selivanov, S.Seregin, E.Shabalina, M.Solodnikov, S.Sverchkov, S.Tarasov, E.Vasilchov, P.Volkov, A.Voropaev, P.Vorobiev, T.Vorobieva, M.Vybrodov, E.Vybrodsky, S.Zorov

Institute for High Energy Physics, Serpukhov, USSR
N.Fedyakin, A.Kozlov, R.Krasnokutsky, A.Lebedev, S.Medved, Yu.Mikhailov, E.Razuvaev, R.Shuvalov, E.Slobodyuk, A.Vasiliev

Institute of Nuclear Physics, Novosibirsk, USSR
L.Barkov, A.Skrinsky, E.Solodov

Yerevan Physics Institute, Yerevan, Armenia, USSR
N.Akopov, A.Amatuni, Ts.Amatuni, R.Asmatyan, R.Avetisyan, A.Avetisyan, G.Bayatyan, P.Galumyan, A.Hagopanyan, R.Kavoian, S.Kazarian, S.Matinyan, G.Mirzoyan, A.Oganesyan, J.Petrosyan, V.Pogosov, K.Shakhyarov, A.Shirinyan, S.Taroyan, N.Ter-Antonyan, G.Vartapetyan

Institute of Physics, Academy of Sciences of the Georgian SSR, Tbilisi
D.Chkareuli, G.Dvali, N.Mantsidze, G.Lazauri, P.Peman, T.Lomadze, A.Djavrishvili, E.Zadaoza, I.Iashvili, K.Ahobadze, M.Svanidze, E.Iokramashvili, N.Roinishvili, L.Gabunia, L.Hizanishvili

Institute of Physics, Academy of Sciences of the Estonian SSR, Tartu
I.Ots, H.Uibo

Institute of High Energy Physics, Beijing, China

C.Chen, G.M.Chen, H.S.Chen, S.X.Fang, S.G.Gao, W.X.Gu, Y.F.Gu, Y.N.Guo, Y.Han, J.He, J.T.He, B.N.Jin, H.T.Li, J.Li, P.Q.Li, W.G.Li, X.G.Li, S.Z.Lin, Q.Liu, Y.S.Liu, Z.P.Mao, L.J.Pan, Z.M.Qian, G.Rong, Y.Y.Shua, X.W.Tang, K.L.Tung, J.H.Wang, L.Z.Wang, R.J.Wu, Y.G.Wu, Z.D.Wu, R.S.Xu, Y.D.Xu, S.T.Xue, C.G.Yang, C.Y.Yang, K.S.Yang, Q.Y.Yang, Z.Q.Yu, B.Y.Zhang, C.C.Zhang, D.H.Zhang, L.S.Zhang, S.Q.Zhang, D.X.Zhao, M.Zhao, Z.P.Zhang, G.Y.Zhu, Q.M.Zhu, Y.C.Zhu, Y.S.Zhu, H.L.Zhuang,

Chinese University of Science and Technology, Hefei, China

H.F.Chen, Z.F.Gong, C.H.Gu, C.Li, Z.Y.Lin, W.G.Ma, C.R.Wang, X.L.Wang, Z.M.Wang, Z.Z.Xu, B.Z.Yang, J.B.Ye, X.Q.Yu, Z.P.Zhang

Shanghai Institute of Ceramics, Shanghai, China

X.L.Fang, P.X.Gu, J.K.Guo, C.F.He, G.Q.Hu, S.K.Hua, H.J.Li, J.L.Li, P.J.Li, Q.Z.Li, Z.L.Pan, D.Z.Shen, G.S.Shen, E.W.Shi, W.T.Su, X.X.Wang, Z.Y.Wei, Y.Y.Xia, L.Xu, Z.L.Xue, D.S.Yan, Z.W.Yin, X.L.Yuan, Y.F.Zhang, G.M.Zhao, Y.L.Zhao, W.Z.Zhong, R.M.Zhou

High Energy Physics Group, Taiwan, China

C.Chang, A.Chen, W.Y.Chen, H.Y.Chang, Y.C.Gau, S.S.Gau, Y.Y.Lee, W.T.Lin, W.T.Ni, Y.D.Tsai, S.C.Yeh

Waseda University, Science and Engineering Research Laboratory, Tokyo, Japan

T.Doke, J.Kikuchi

Saitama College of Health, Saitama, Japan

K.Masuda

Kyungpook National University, Taegu, Korea

D.Son, S.K.Cho, J.K.Ko

Gyeongsang National University, Jinju, Korea

J.S.Song, I-G.Park, S-K.Choi, K.S.Chung

Chungnam National University, Daejeon, Korea

H.Y.Lee

Cheonnam National University, Kwangju, Korea

J.Kim

Kangreung National College, Kangreung, Korea

D.W.Kim, G.S.Kang

Korea University, Seoul, Korea

J.S.Kang

Seoul National University, Seoul, Korea

J.Kim

Sangji College, Wonju, Korea

Y.Y.Kaum

Taegu University, Taegu, Korea

D.S.Kim

Spokesperson:

Samuel C.C.Ting
MIT-LNS, Bldg.44
51 Vassar Street
Cambridge, MA02139, USA

Precision Lepton Detectors in the TeV region

dla

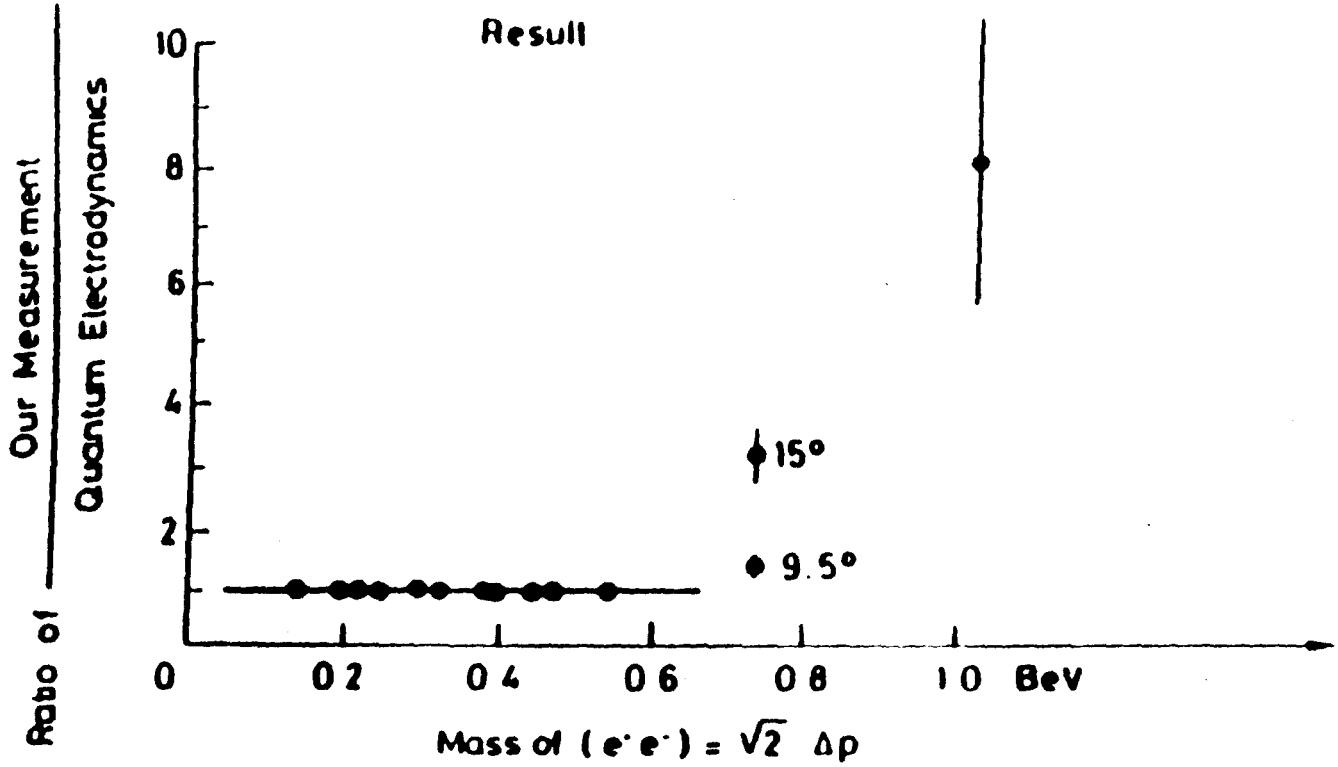
Result
Ratio of Our Measurement / Quantum Electrodynamics
10
8
6
4
2
0
0.2
0.4
0.6
0.8
1.0 BeV
15°
9.5°
Mass of (e⁻e⁻) = √2 Δp

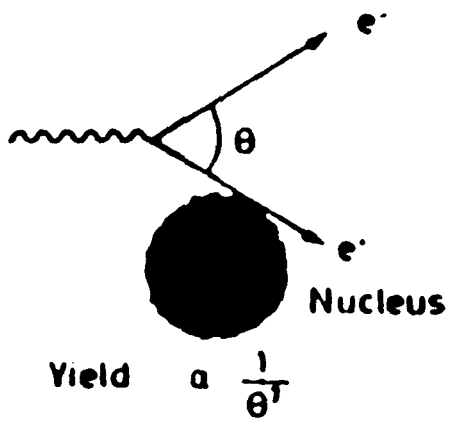
e⁻
θ
e⁻
Nucleus
Yield a 1/θ⁴

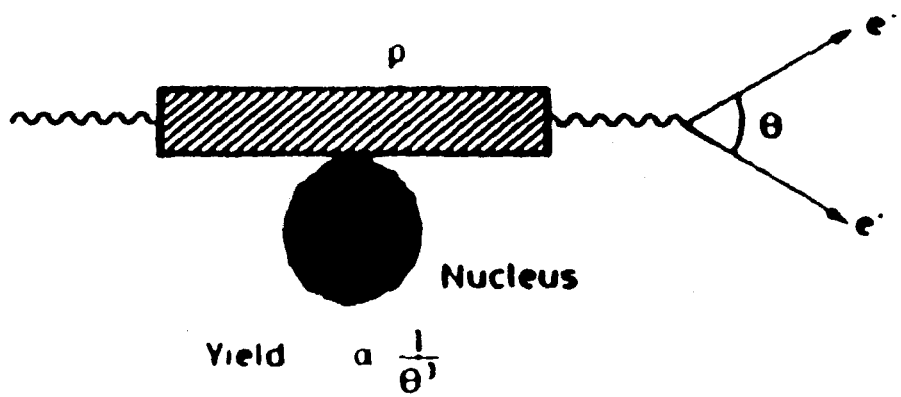
ρ
e⁻
θ
e⁻
Nucleus
Yield a 1/θ³

Interferences in Leptonic Decays.

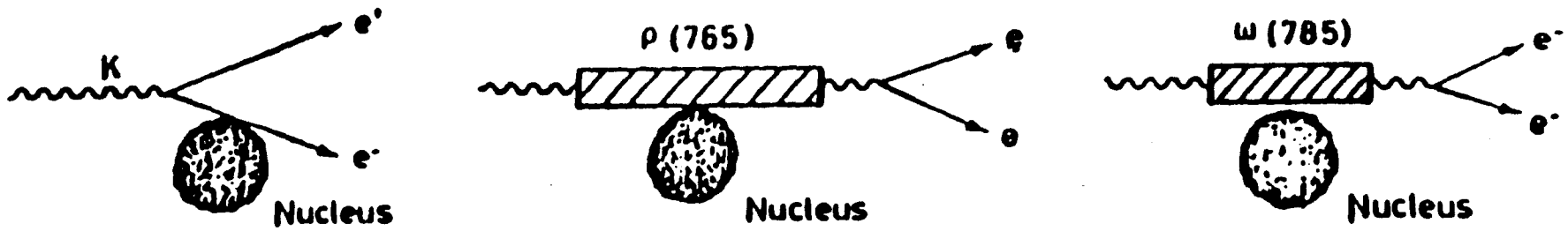

Experimental difficulties

1. $(\rho \to e^- e^+) / (\rho \to \pi^- \pi^+) \approx 10^{-5}$
   Rejection againt $\pi\pi >> 10^8$
2. Width of $\omega \sim 10$ MeV
   Resolution of detector ~ 5 MeV

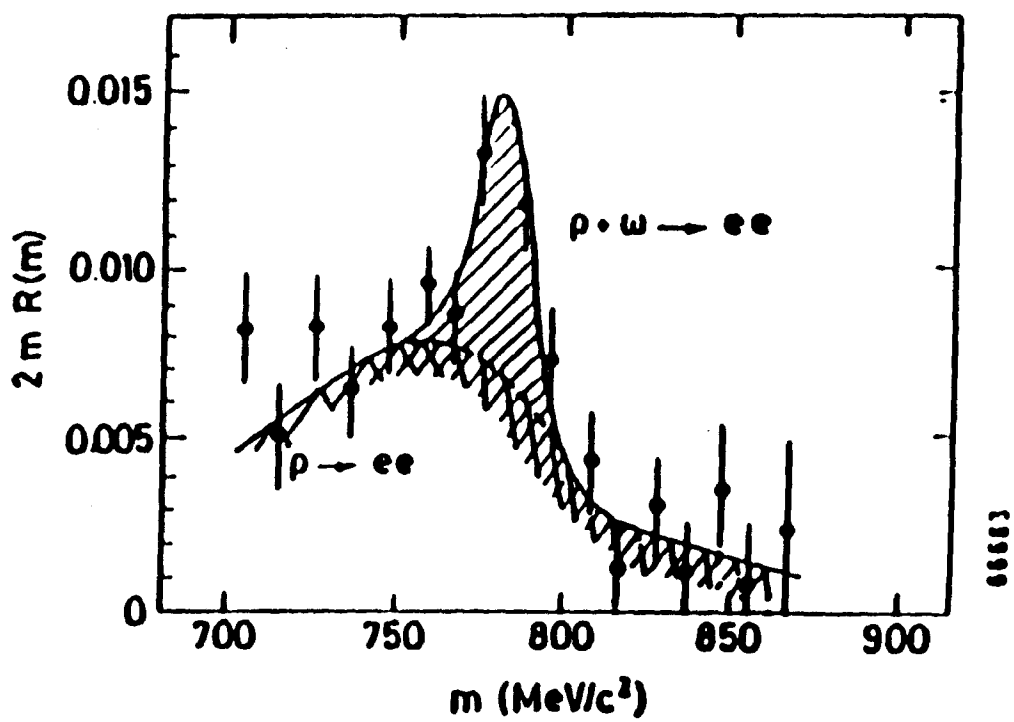

DESY

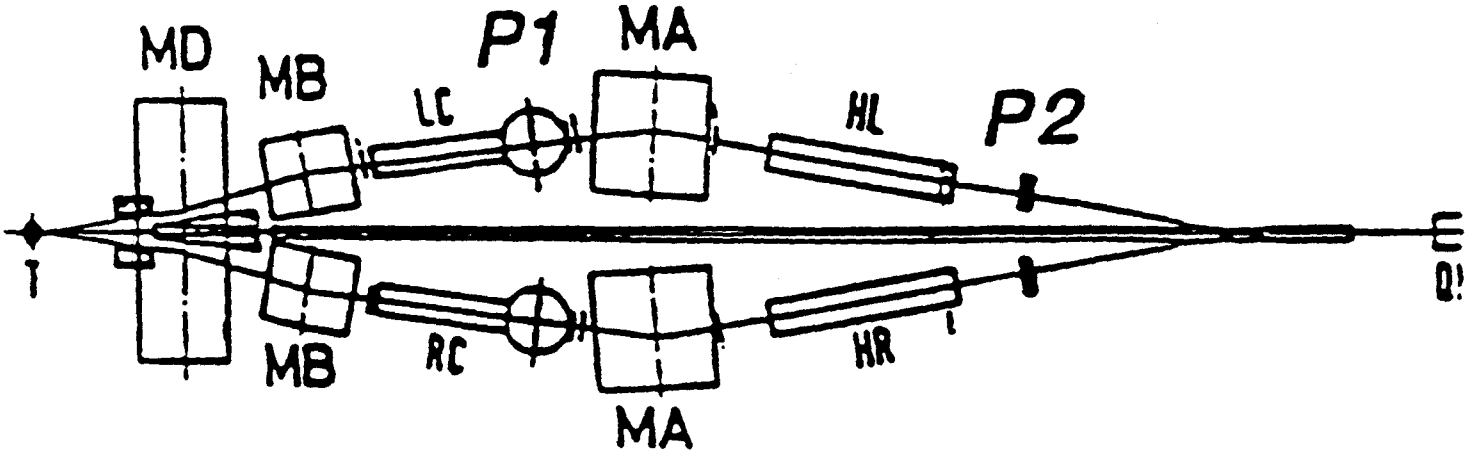

$P1 = P2$

25 Years of Electrons, Muons and Photons

	DESY	BNL	ISR	PETRA	LEP
	64 — 72	72 — 74	74 — 78	78 — 83	83 — 90
	$\gamma \to e^+ e^-$	$J \to e^+ e^-$	$p\ p \to \mu^+ \mu^-$	$e^+ e^- \to Q\bar{Q}g$	$Z^0 \to l^+ l^-, Q\bar{Q}$
	QED $R < 10^{-14}$ cm $\rho, \omega, \phi \to e^+ e^-$ SU3	New Quarks	Scaling	Gluons - α_s $e^+ e^- \to \mu^+ \mu^-$ QED $R < 10^{-16}$ cm	3 Families g_A, g_V $B \to \mu + X$
	$\frac{\Delta M}{M} = 1\%$	$\frac{\Delta M}{M} = 0.1\%$	$\Omega = 2\pi$	$\Omega = 4\pi$	$\Omega = 4\pi$
	$\frac{ee}{hh} = 10^{-8}$	$\frac{ee}{hh} = 10^{-10}$	$\frac{\mu\mu}{hh} = 10^{-6}$	e, μ, jets	e, μ, γ $\frac{\Delta p}{p} = 1\%$
	$10^{35} cm^{-2} s^{-1}$	$10^{36} cm^{-2} s^{-1}$	$10^{32} cm^{-2} s^{-1}$	$10^{30} cm^{-2} s^{-1}$	$10^{31} cm^{-2} s^{-1}$
	$p_1 = p_2$	$p_1 = p_2$ high rate chambers	large area chambers		$p_1 = p_2$ (e, γ) $p_1 = p_2 + \Delta E$ (μ)

View of events

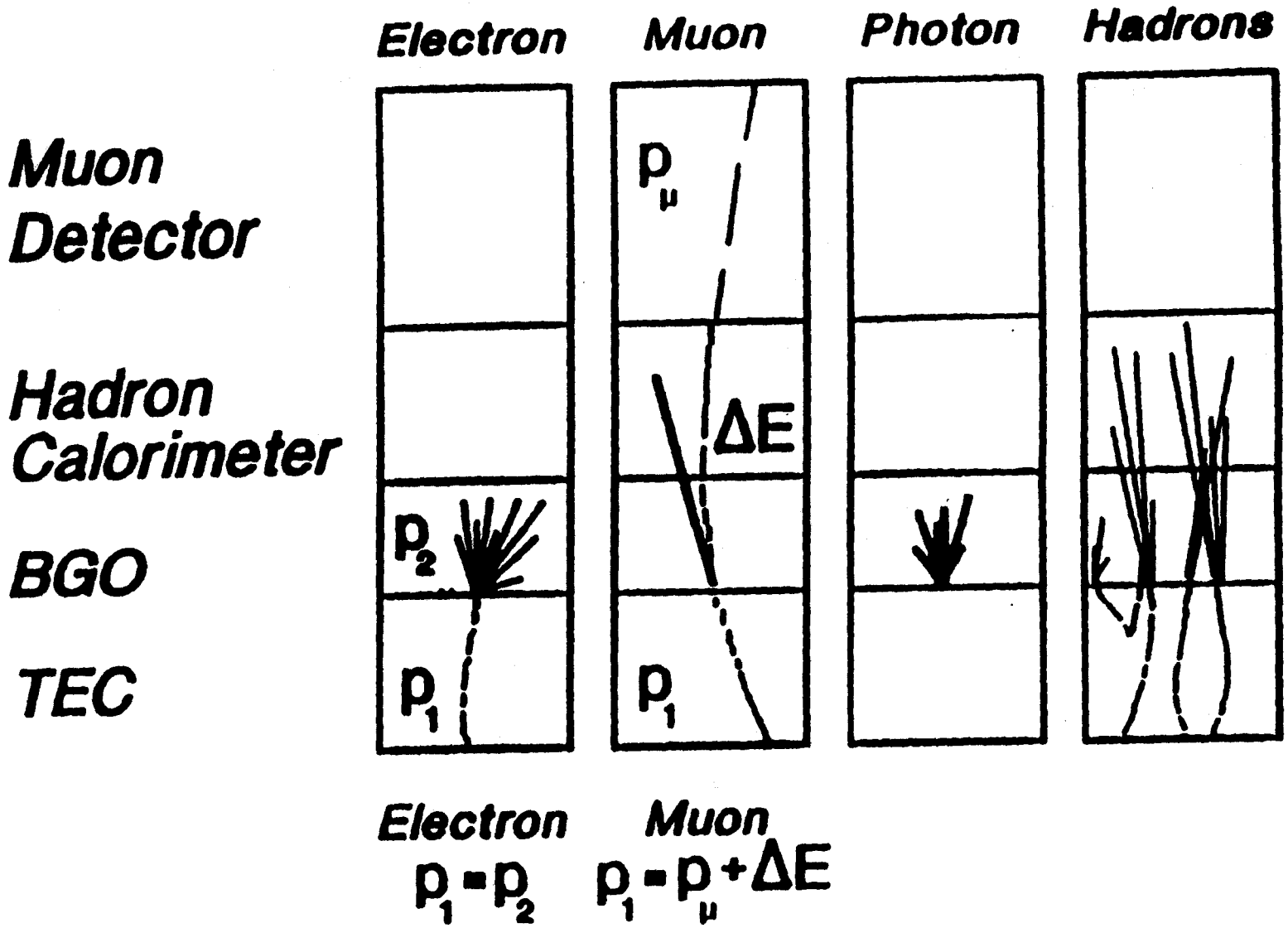

L3 DETECTOR

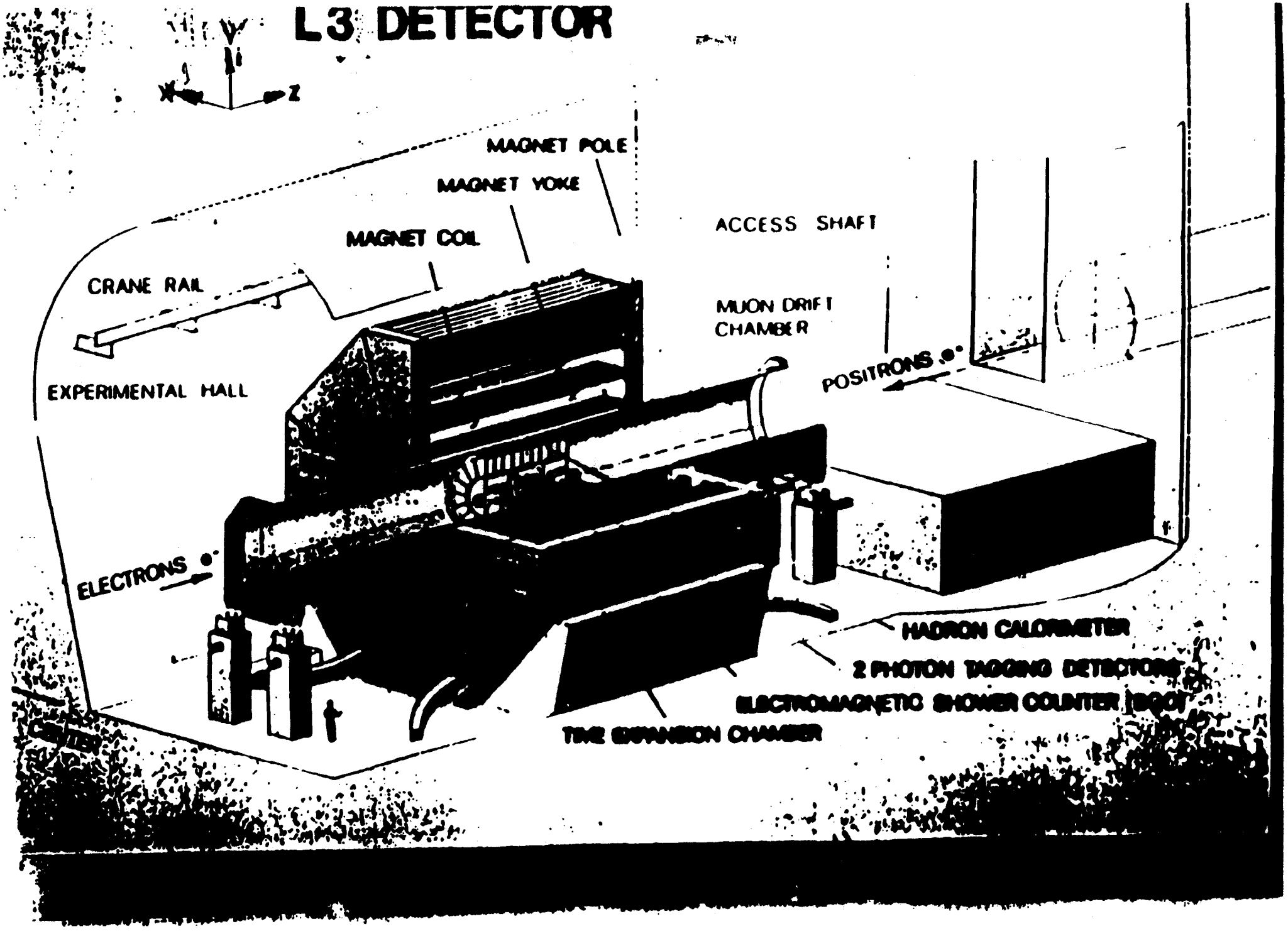
Y
X
Z
MAGNET POLE
MAGNET YOKE
MAGNET COIL
CRANE RAIL
EXPERIMENTAL HALL
ACCESS SHAFT
MUON DRIFT CHAMBER
POSITRONS
ELECTRONS
HADRON CALORIMETER
2 PHOTON TAGGING DETECTORS
ELECTROMAGNETIC SHOWER COUNTER (BGO)
TIME EXPANSION CHAMBER

L3

581 scientists.....40 institutes

L★

850 scientists.....70 institutes

$Z^0 \rightarrow$ hadrons

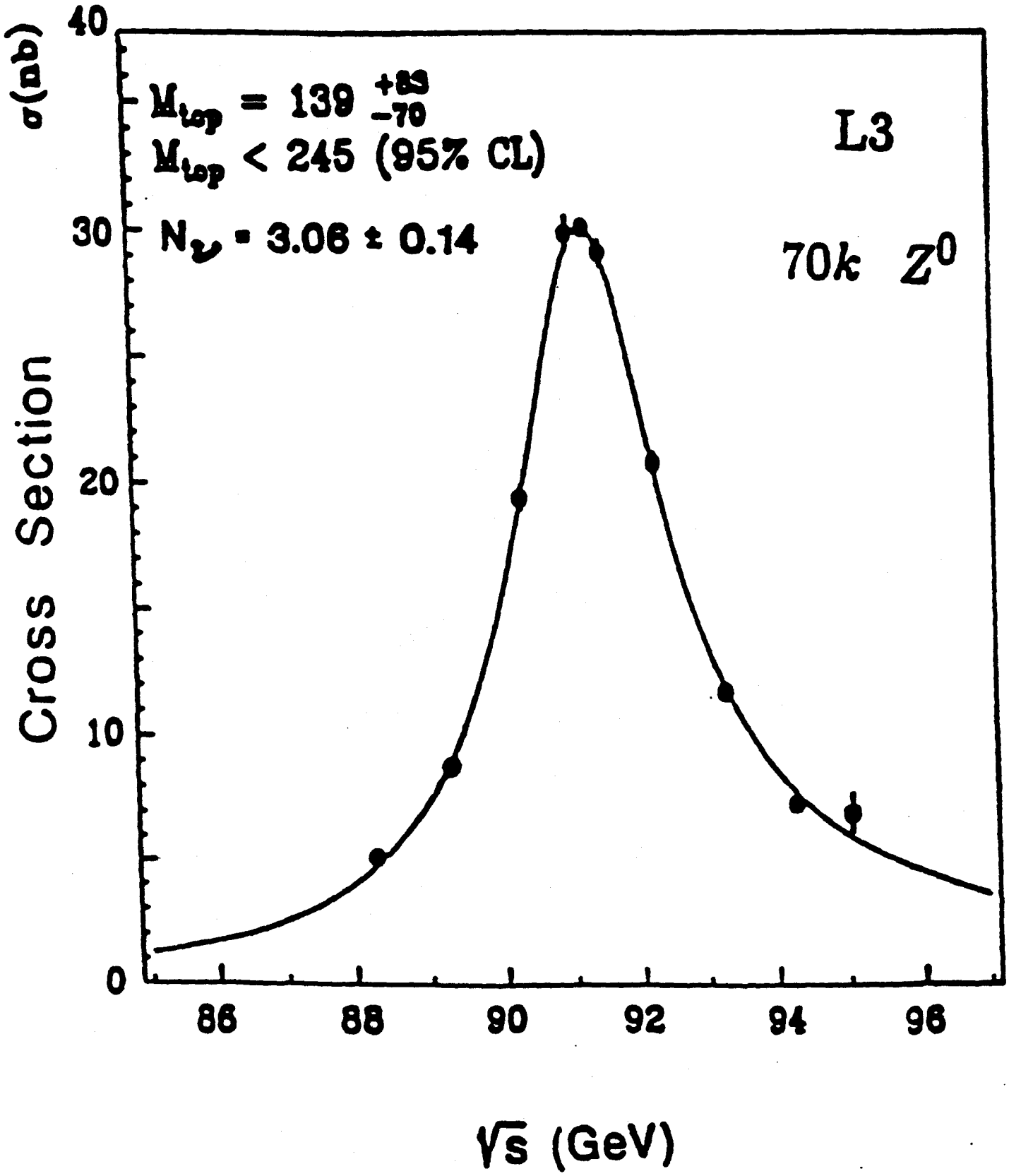

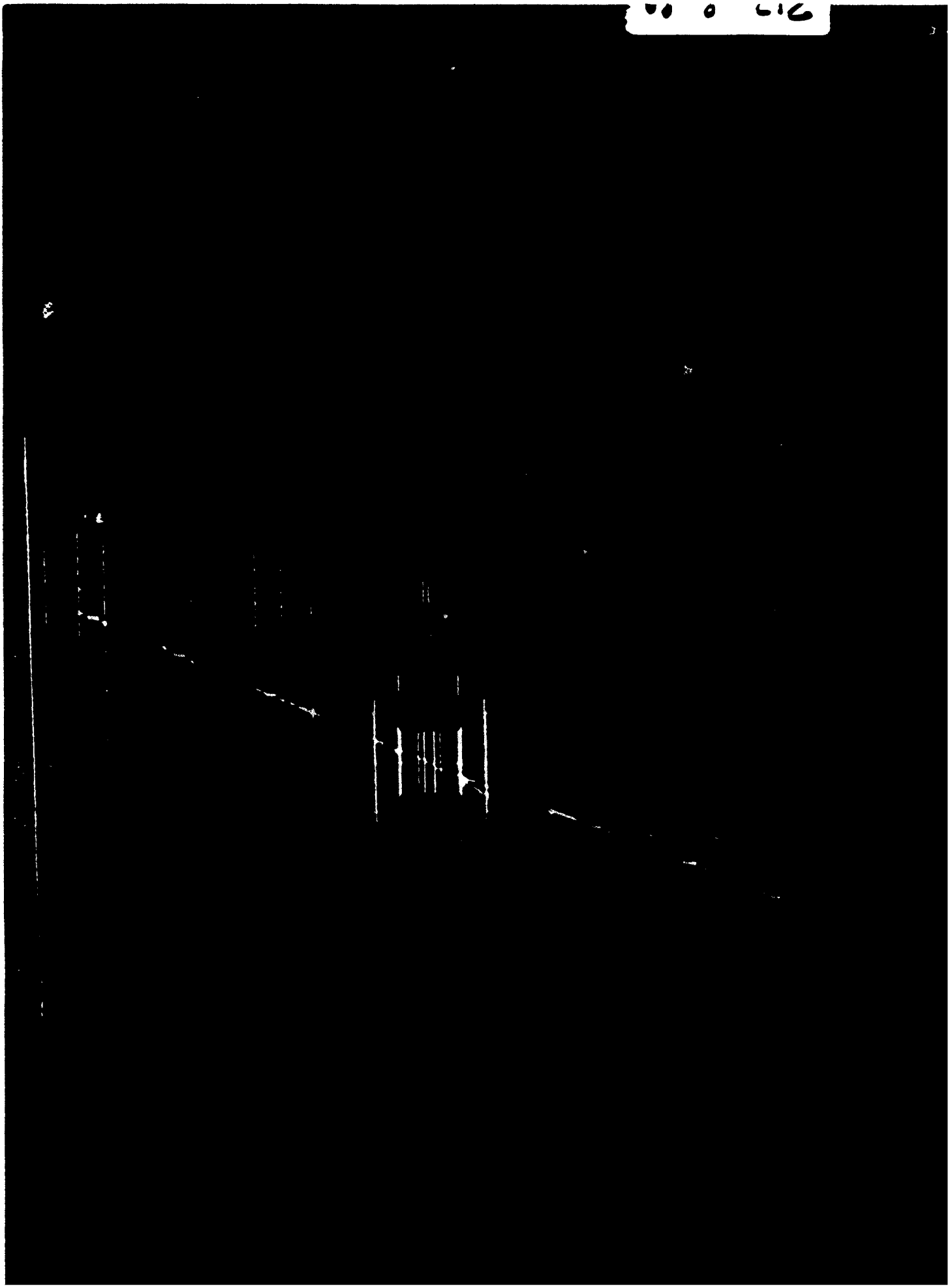

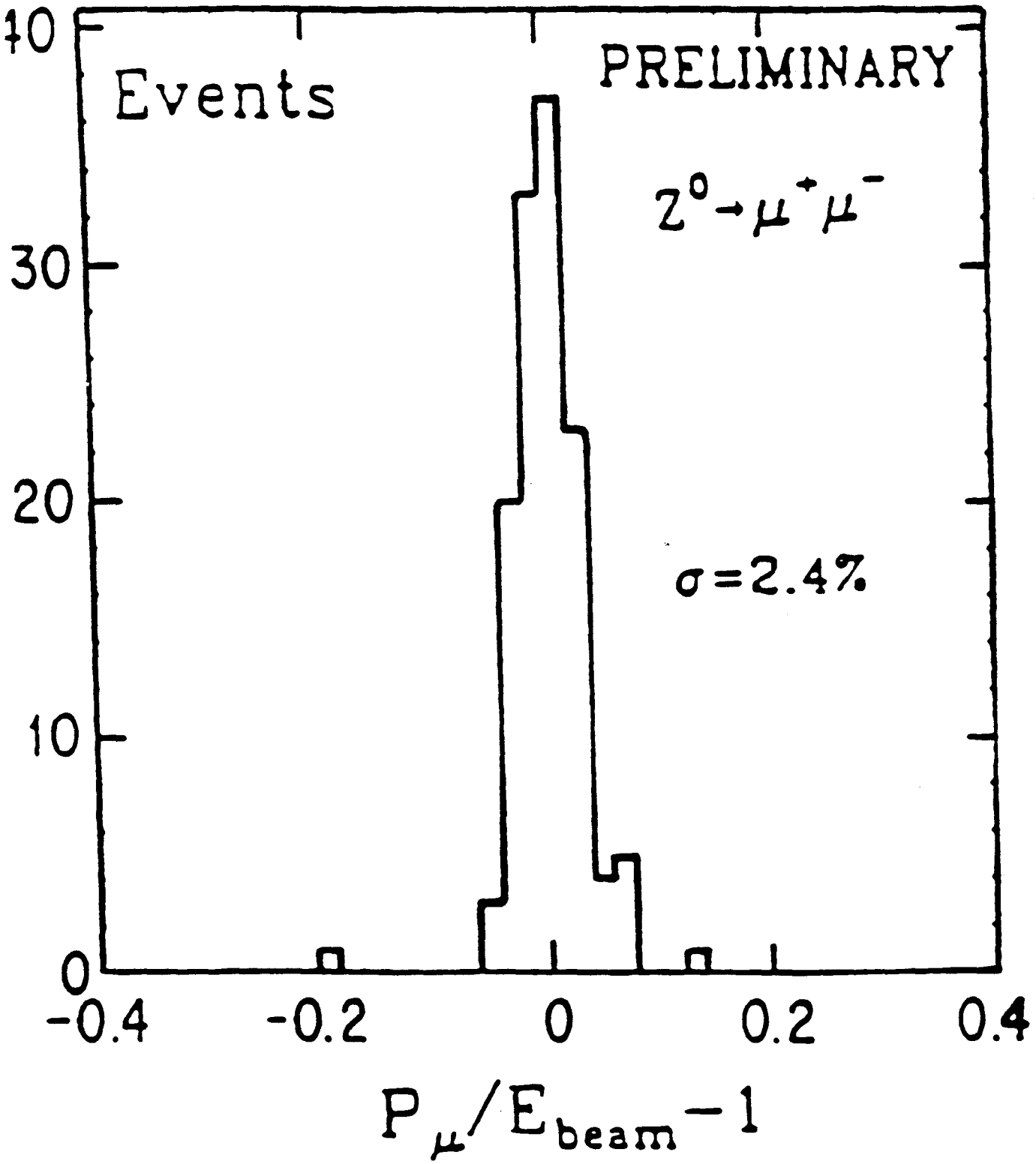
Events
PRELIMINARY
$Z^0 \to \mu^+\mu^-$
$\sigma = 2.4\%$
40
30
20
10
0
-0.4
-0.2
0
0.2
0.4
$P_\mu/E_{beam} - 1$

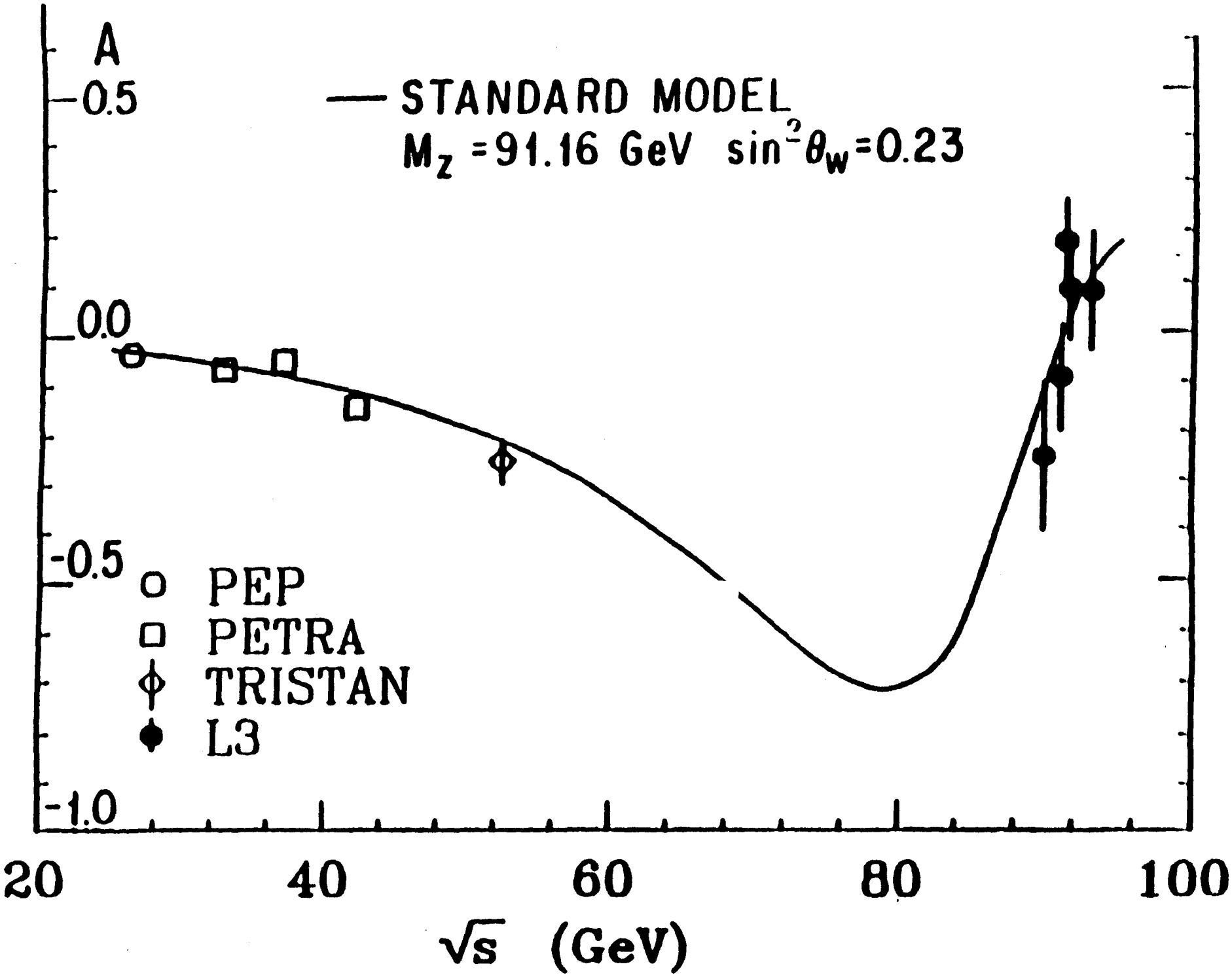
A
0.5
0.0
-0.5
-1.0
STANDARD MODEL
M_Z =91.16 GeV $\sin^2\theta_W$=0.23
PEP
PETRA
TRISTAN
L3
20
40
60
80
100
$\sqrt{s}$ (GeV)

$$l_{\parallel} = 84.0 \pm 2.0 \text{ MeV}$$

$$g_A = 0.499 \pm 0.007$$

$$g_V = -0.064 {}^{+0.027}_{-0.019}$$

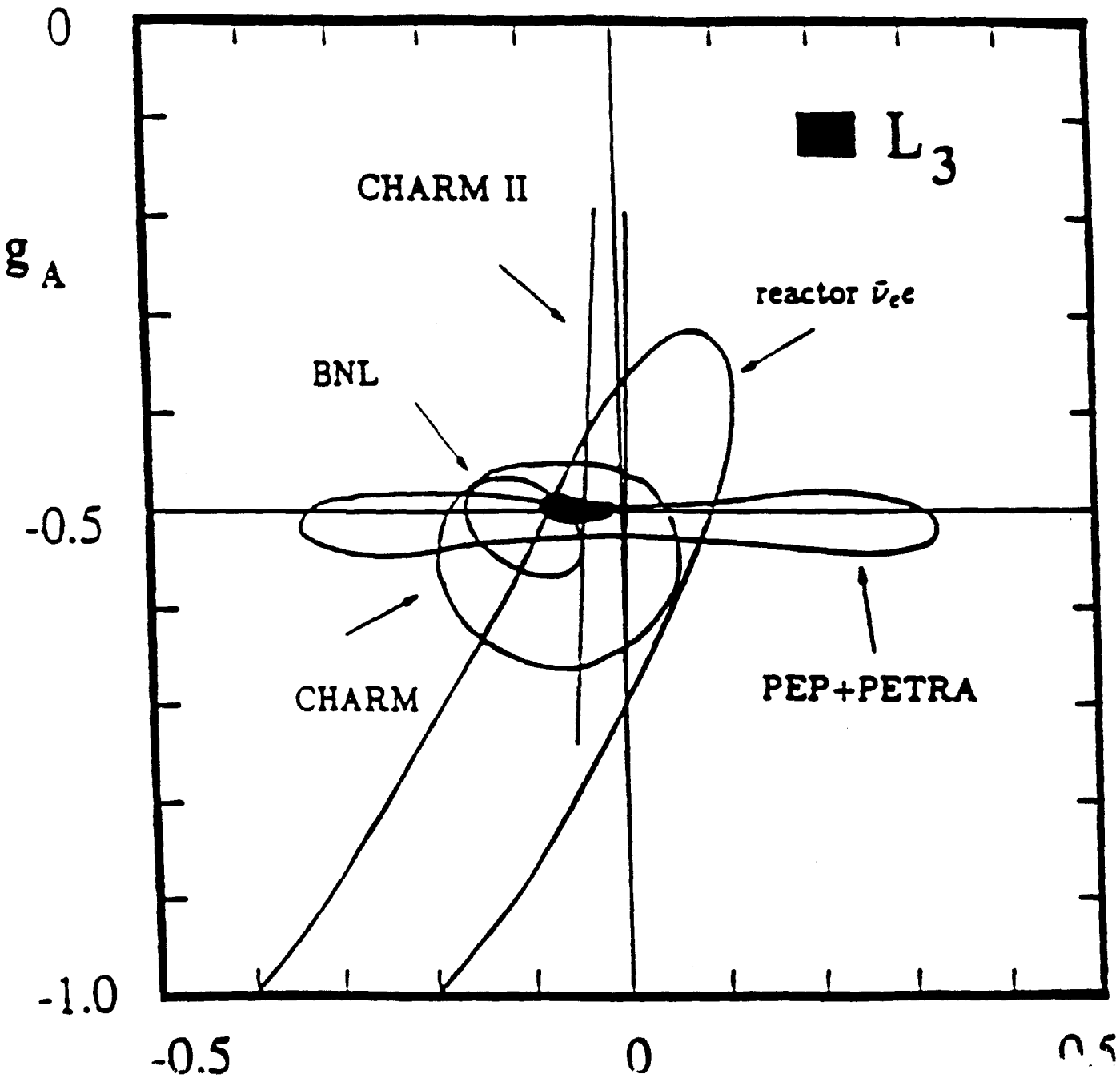

$$A_{b\bar{b}}^{FB} = 13.5\ \% \pm 5.4\ \%$$

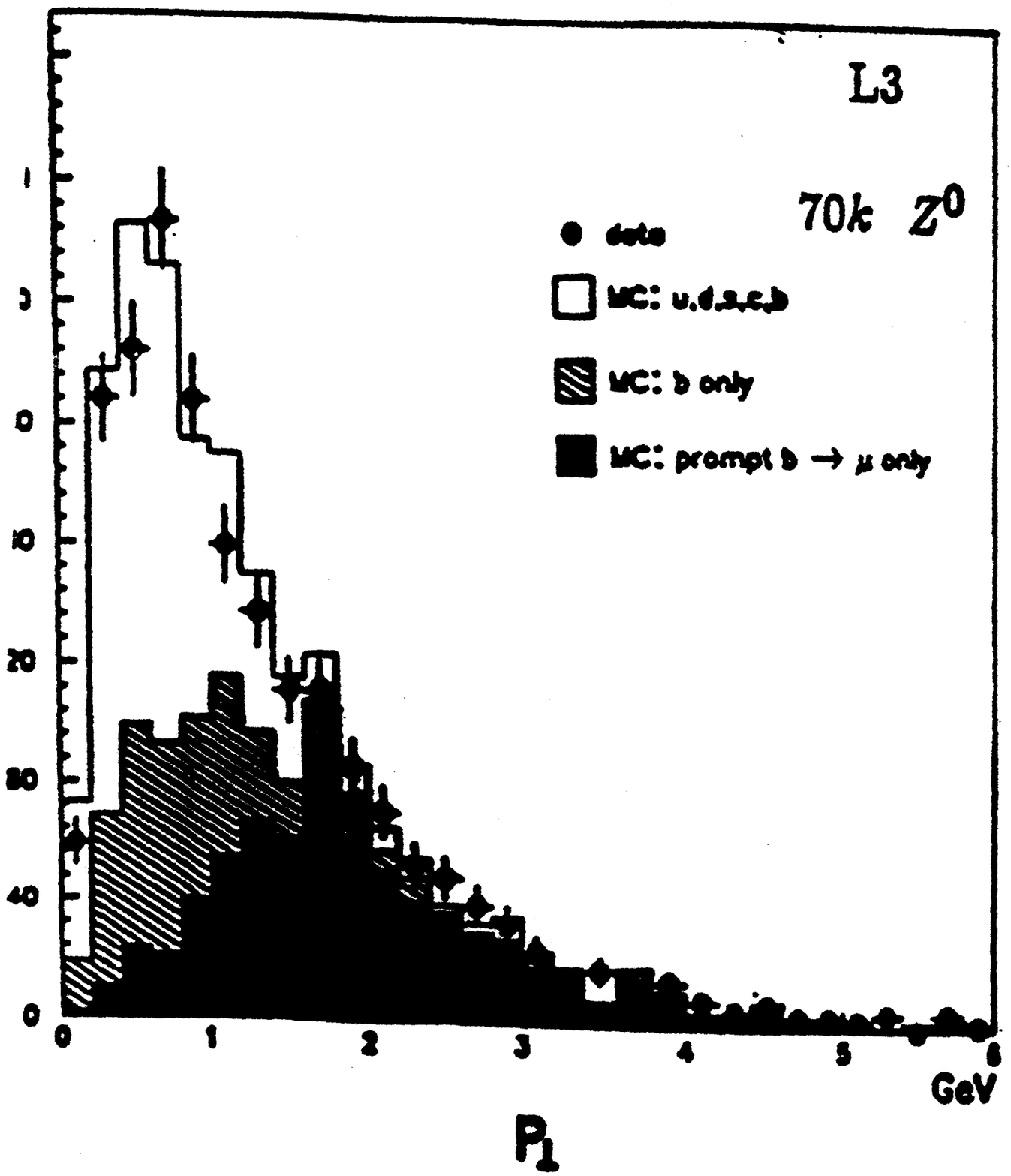

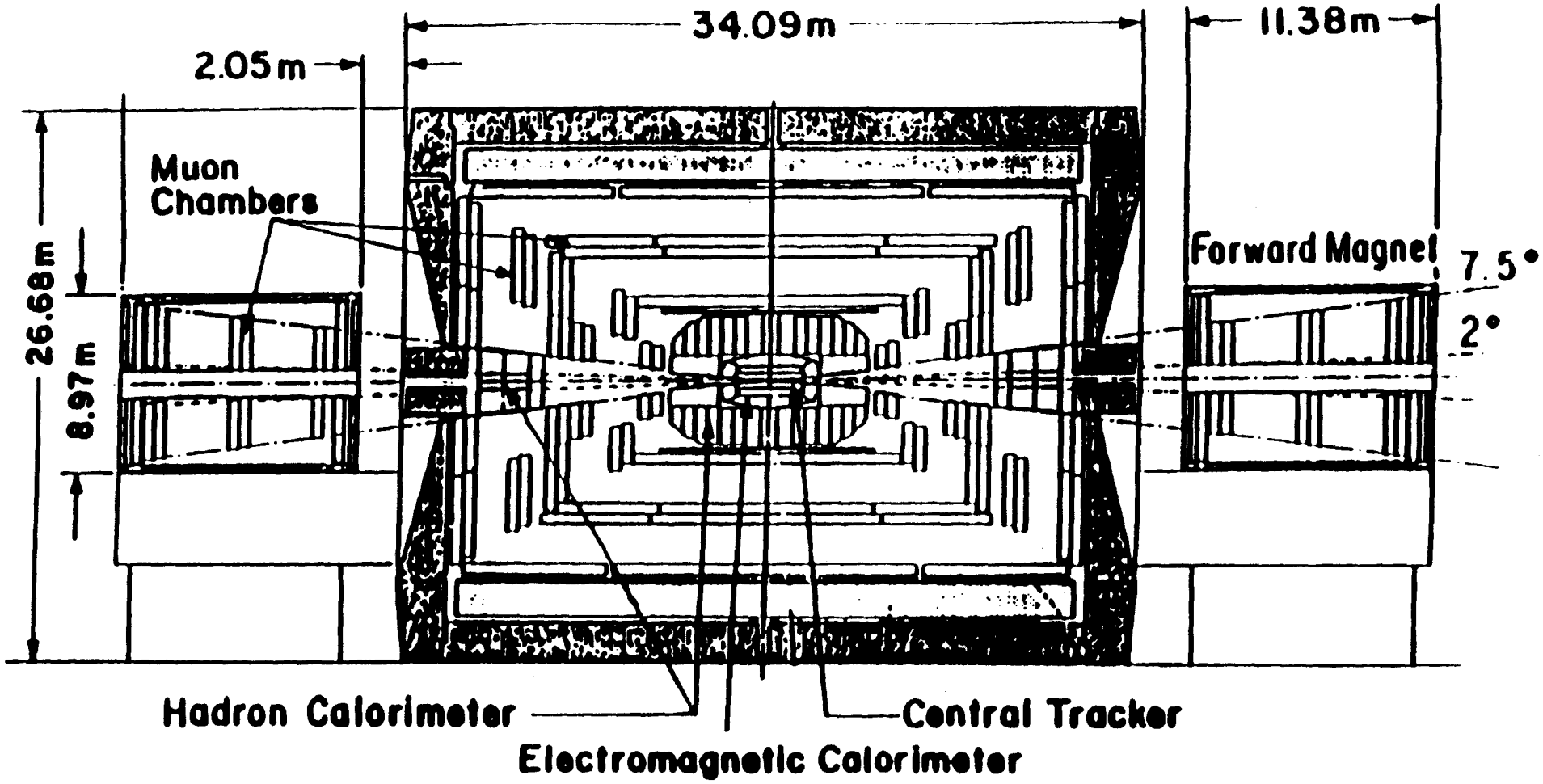
34.09m
11.38m
2.05m
Muon Chambers
26.68m
8.97m
Forward Magnet
7.5°
2°
Hadron Calorimeter
Central Tracker
Electromagnetic Calorimeter

L^*

Inclusive γγ spectrum

- E_γ > 700 MeV
- Both γ's in the same hemisphere

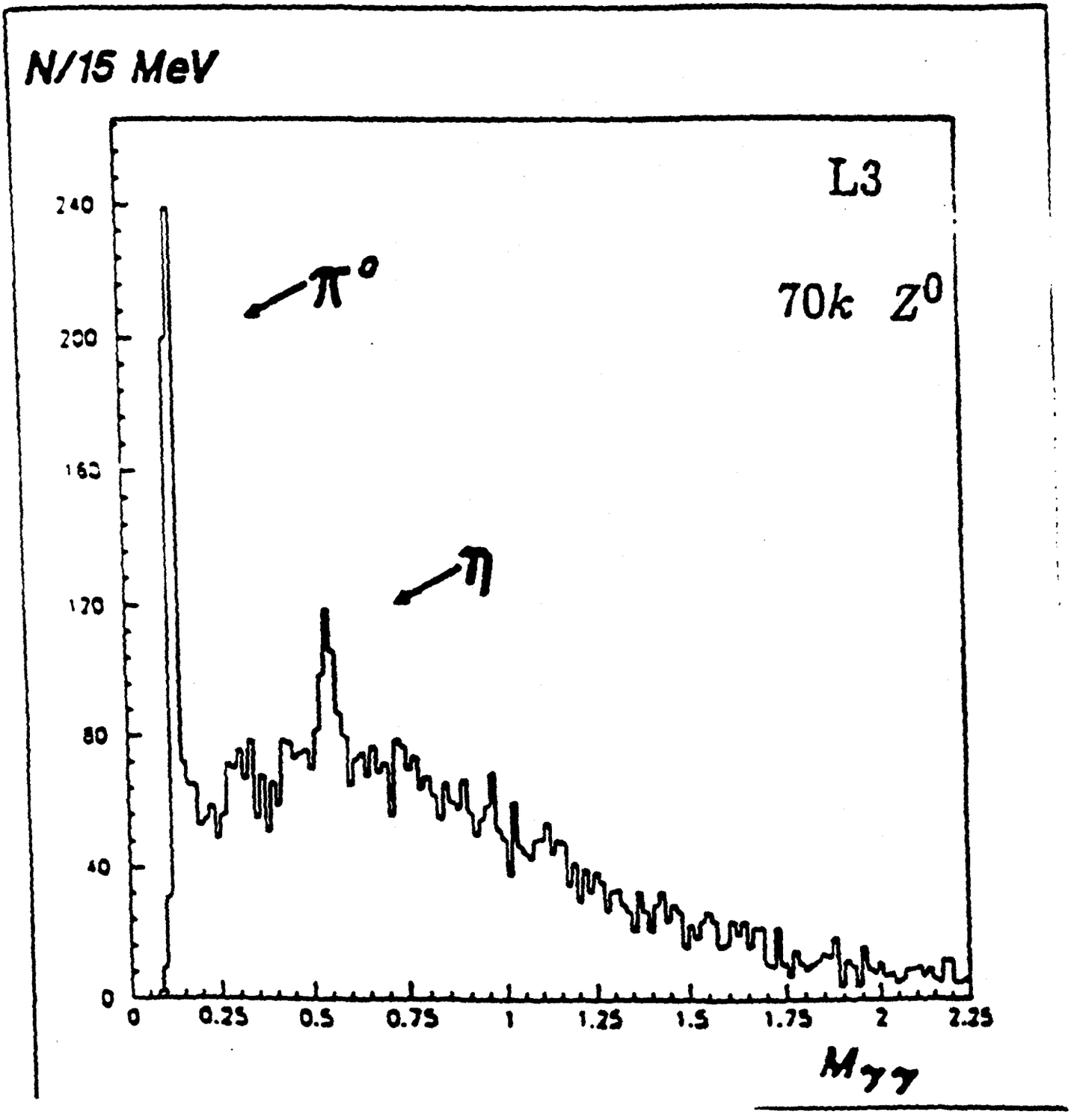

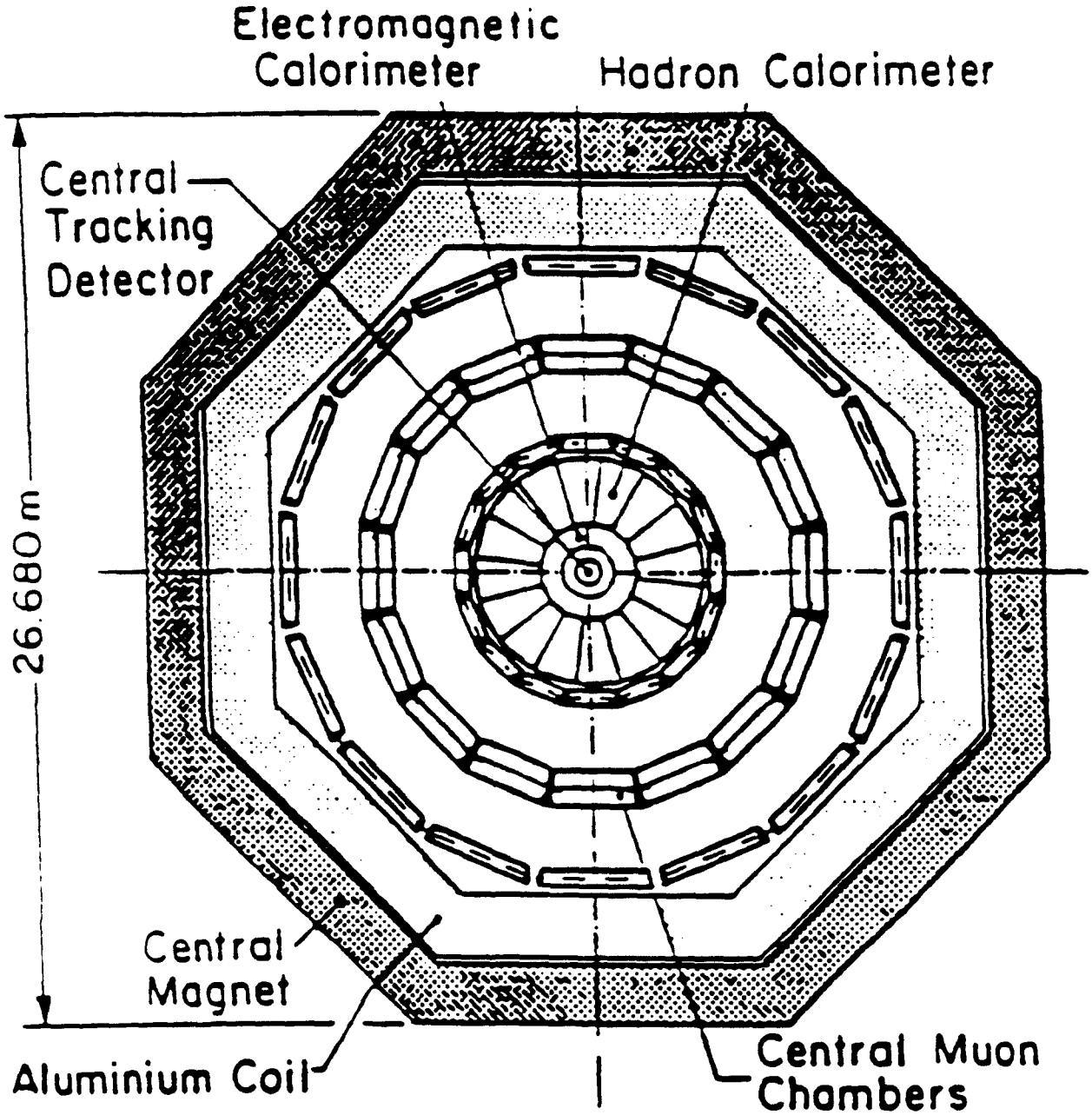
Electromagnetic Calorimeter
Hadron Calorimeter
Central Tracking Detector
26.680 m
Central Magnet
Aluminium Coil
Central Muon Chambers

L^*

L* Engineering Centers

Examples :

Kurchatov, ITEP Moscow, Leningrad, Dubna

ETH Zürich, Aachen I Germany

S.I.C. Shanghai

Oak Ridge, Los Alamos, Livermore, Draper

others

Magnet System

consists of a Central Magnet
providing a field of 0.75T
& forward-backward magnets
with field of 0.3T

Central magnet design :

either conventional with aluminium coil
or
superconducting coil with iron return
or
superconducting coil with a superconducting
return coil to replace iron

Coil Options for the Central Solenoid

Parameter	Aluminium Coil	SC Coil	Double SC Coil	Unit
Field	0.75	0.75	0.75	Tesla
Power Consumption	22	2	2	MW
Outer Diameter	26.7	25.0	30.0	m
Mass of Iron	48 200	41 350	-	ton
Mass of Coil(s)	7 700	1 103‡	4 000‡	ton
Operating Current	66	23	25	kA

‡ Including structure and vacuum vessel

L3 MAGNET

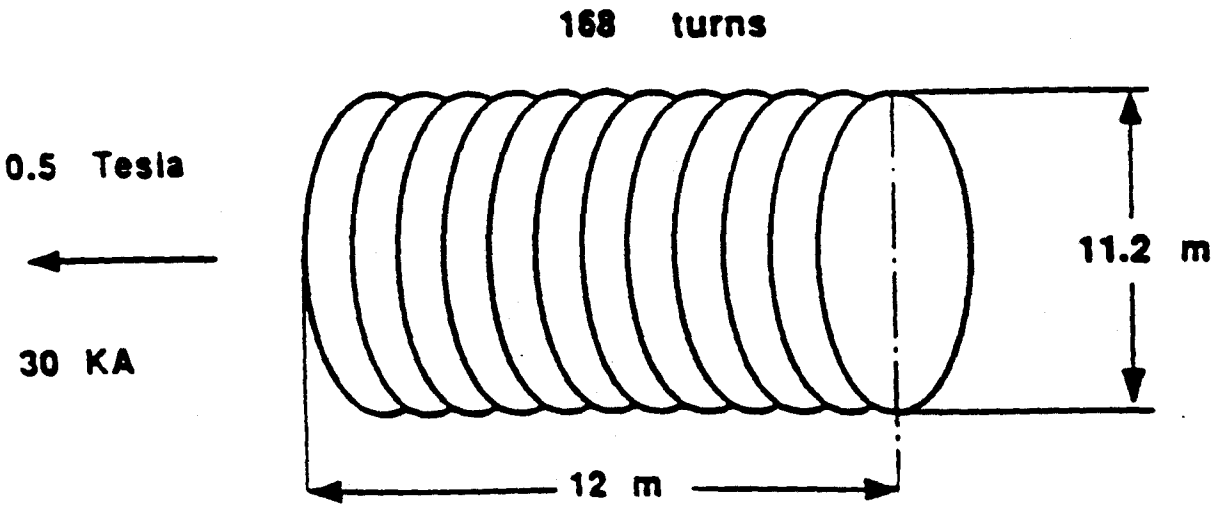

Total stored energy 160 MJ
Power consumption 4 MW

L* MAGNET

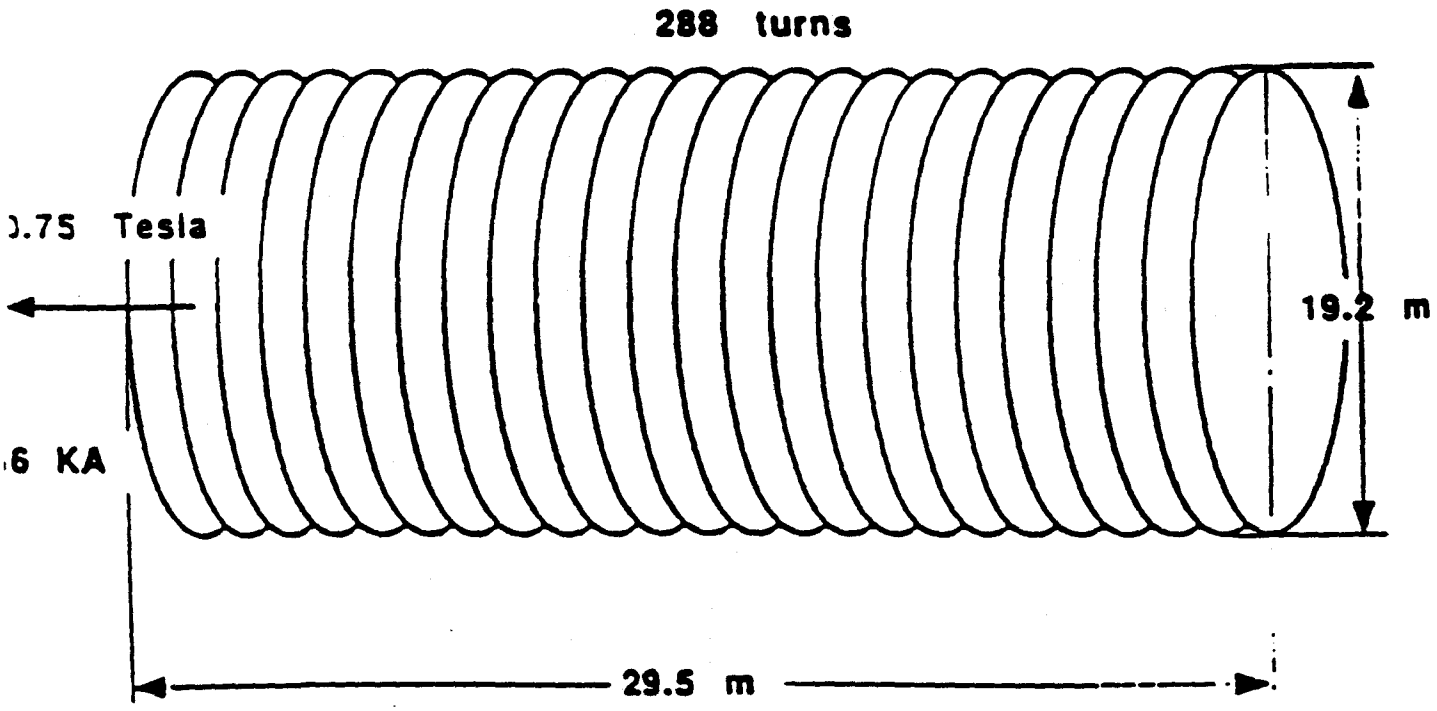

Total stored energy 2660 MJ

Power consumption 20 MW

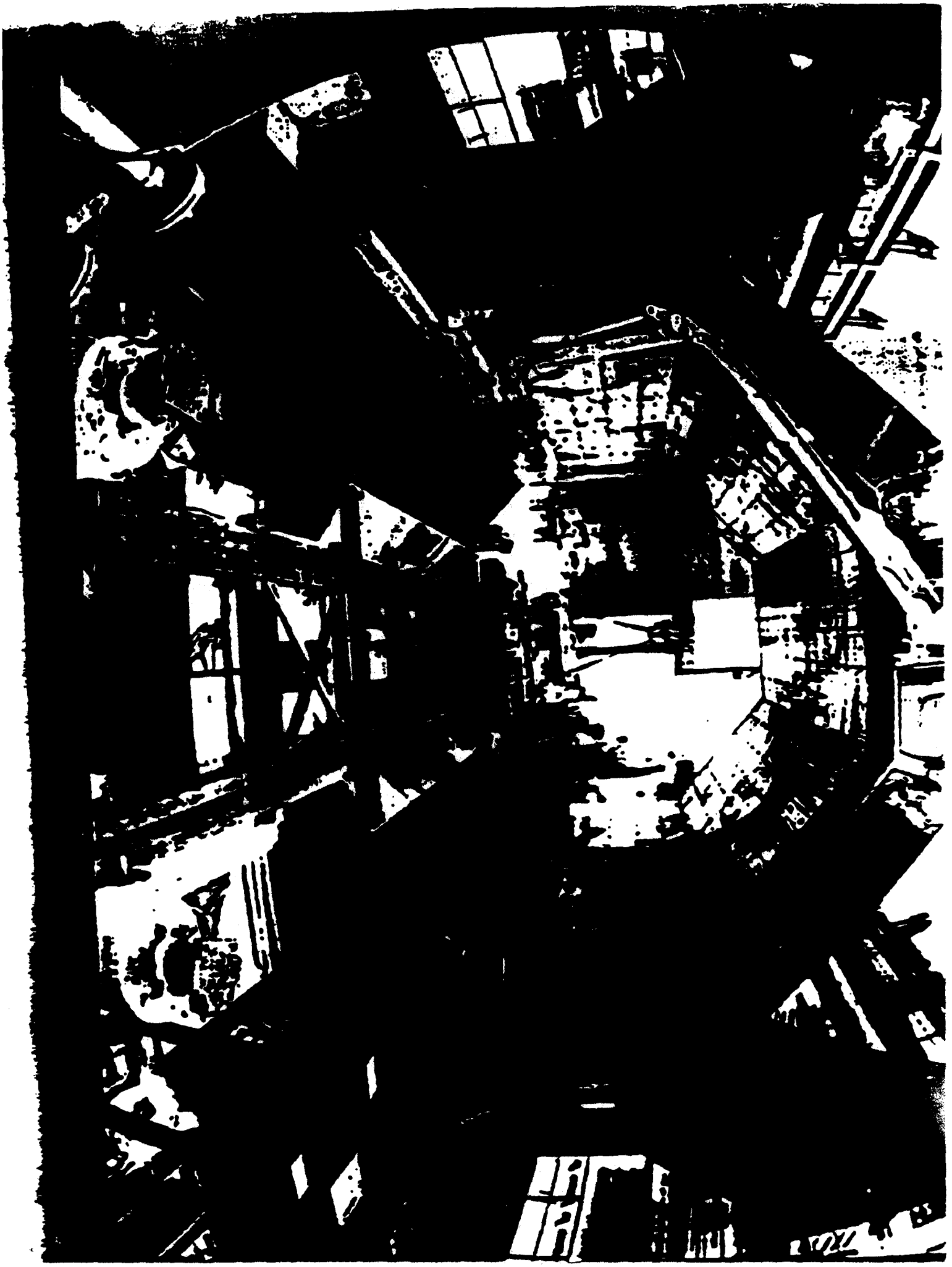

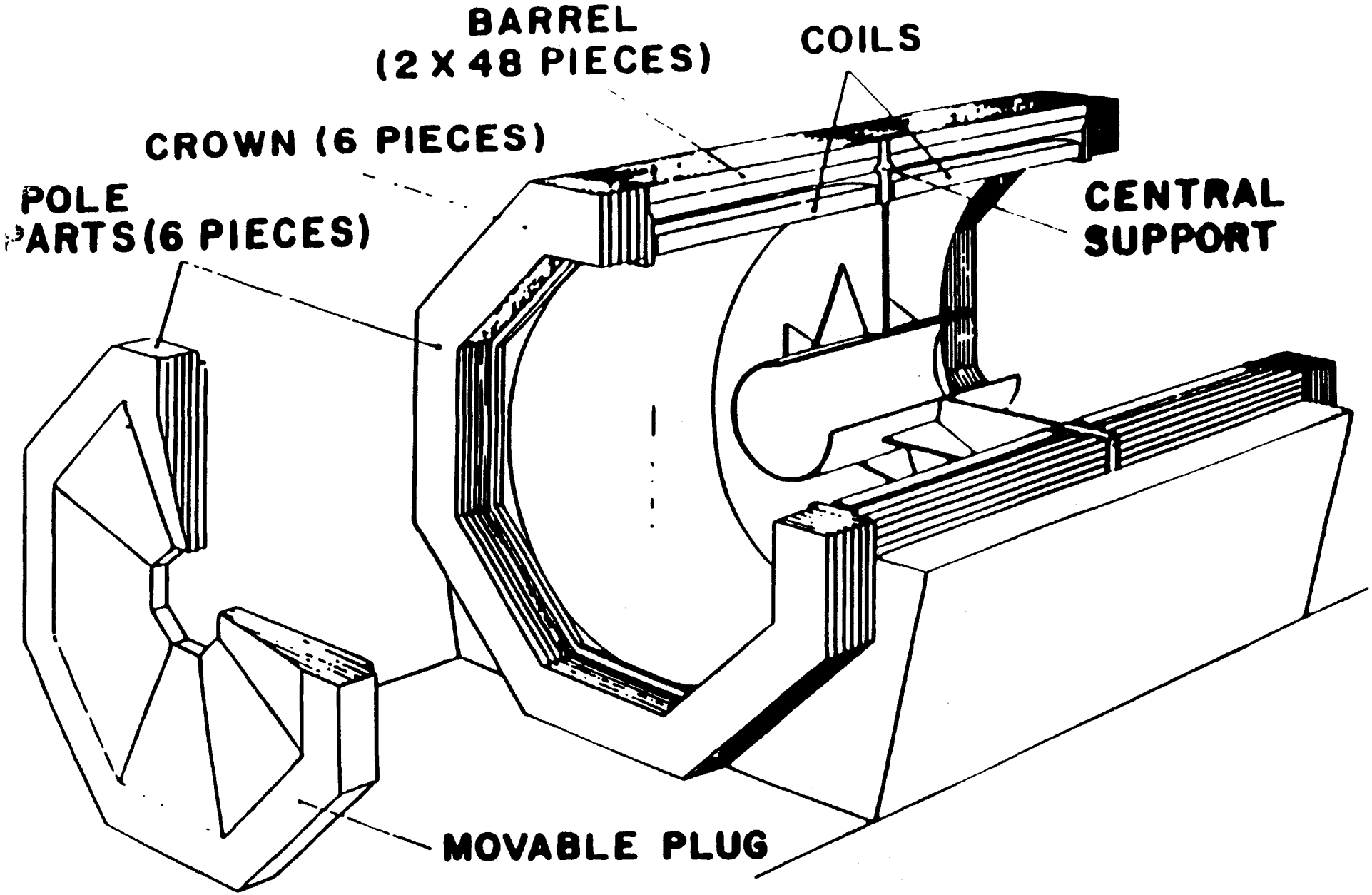
BARREL
(2 X 48 PIECES)
COILS
CROWN (6 PIECES)
POLE
PARTS (6 PIECES)
CENTRAL
SUPPORT
MOVABLE PLUG

1000 ton gantry crane

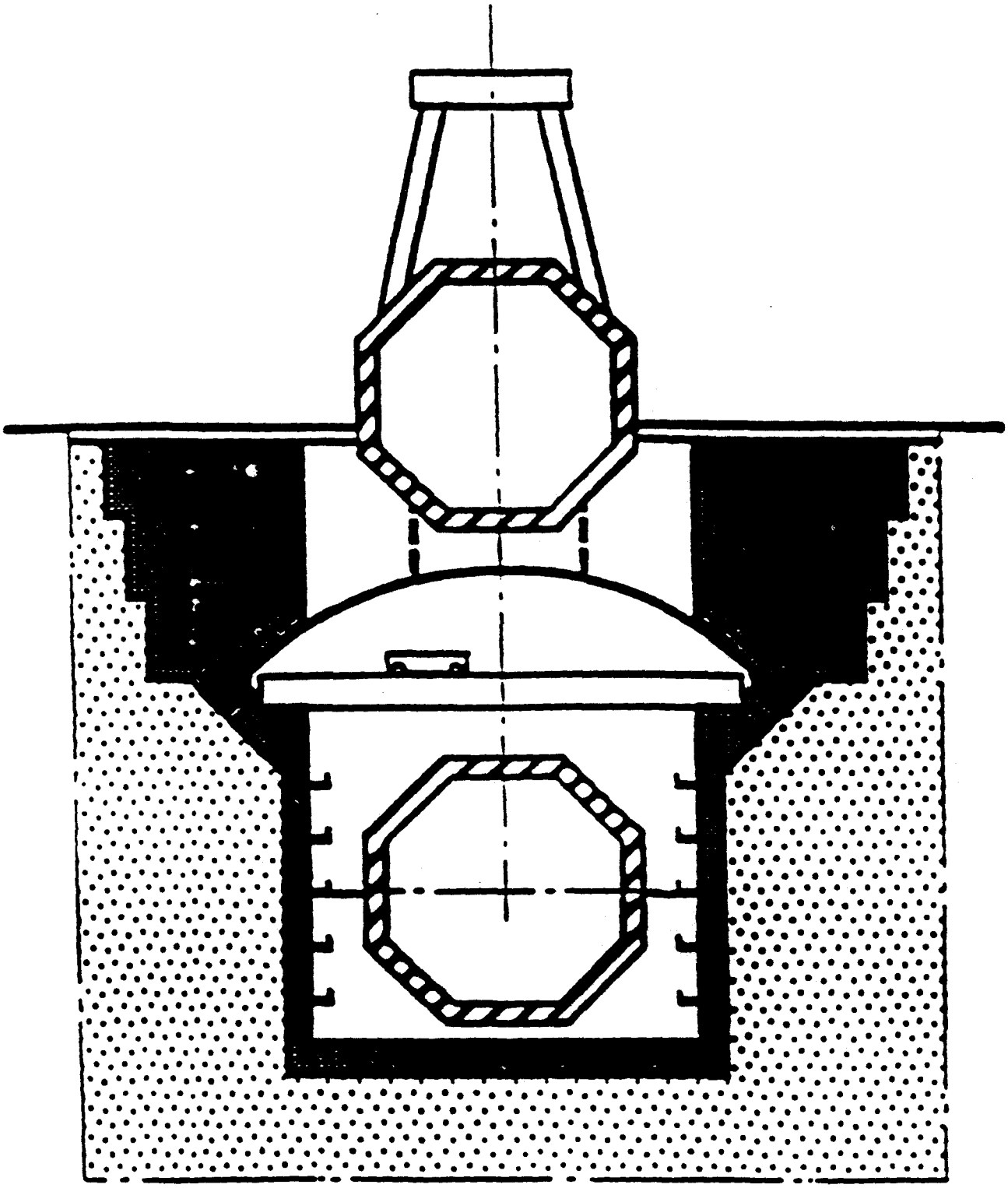

Mounting of the crown ring

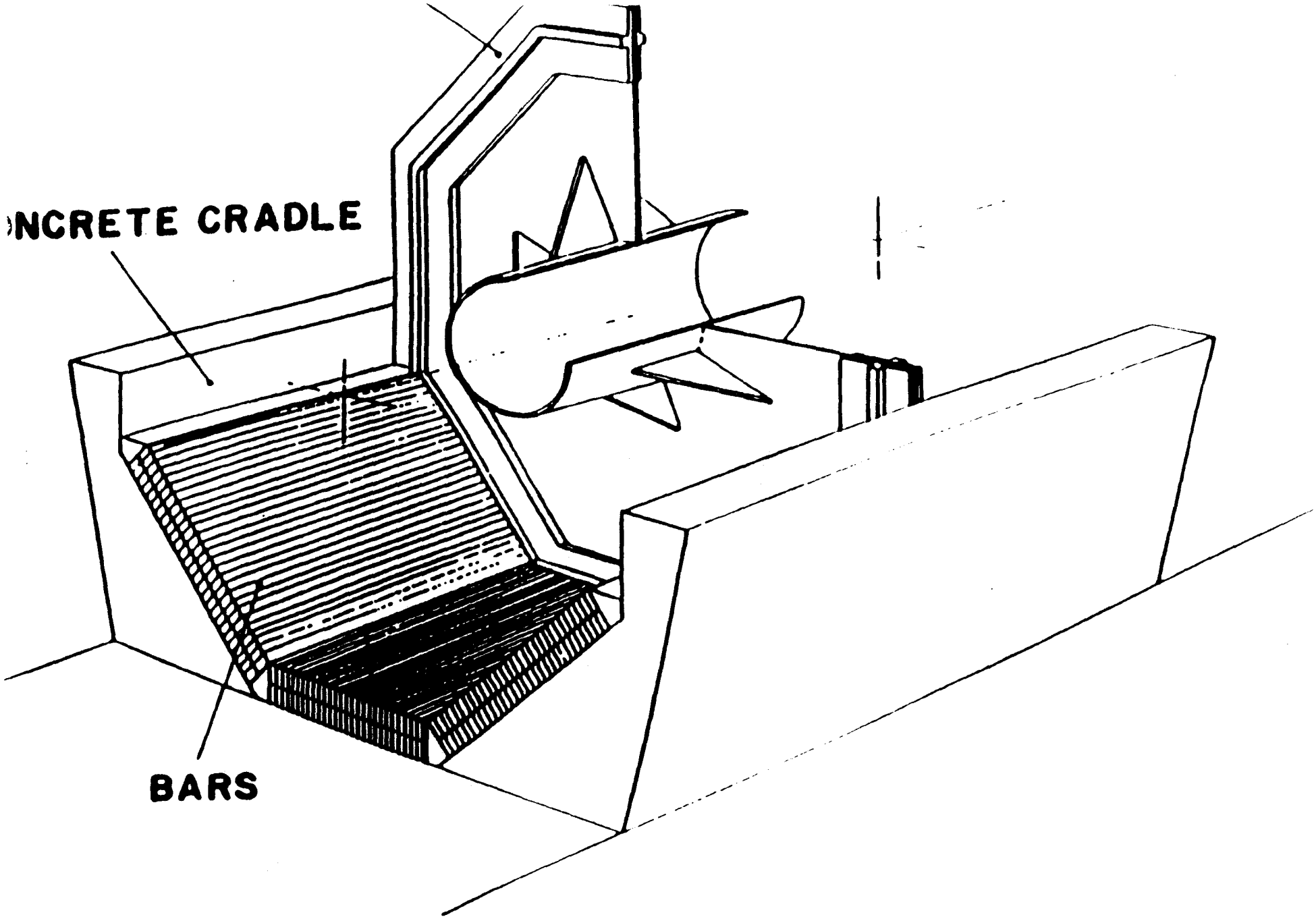
NCRETE CRADLE
BARS

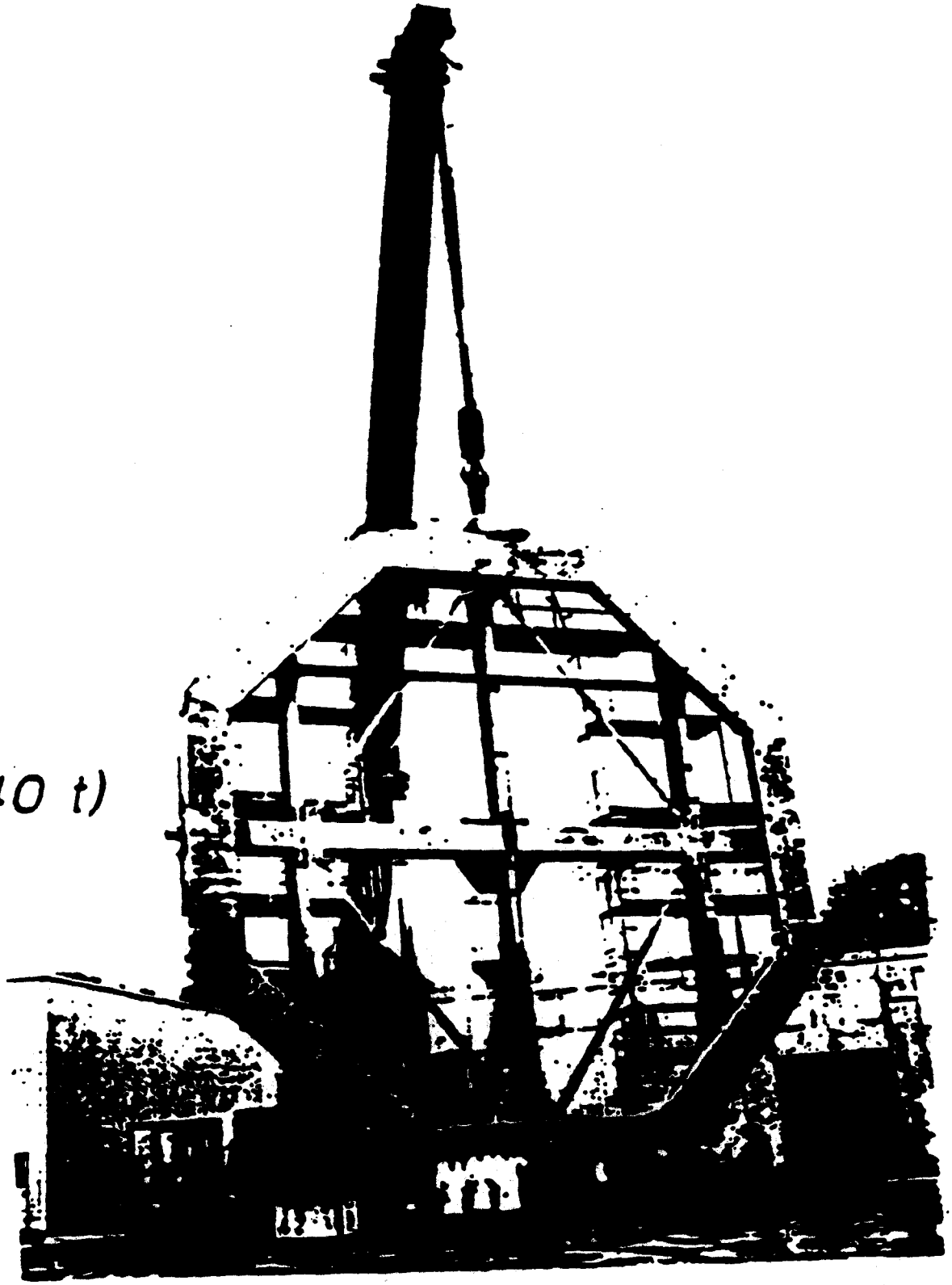

.3
x 40 t)

16 eighteen-turn-packages in 600-ton units

*

made out of 925x155x9 cm^3 aluminium plates

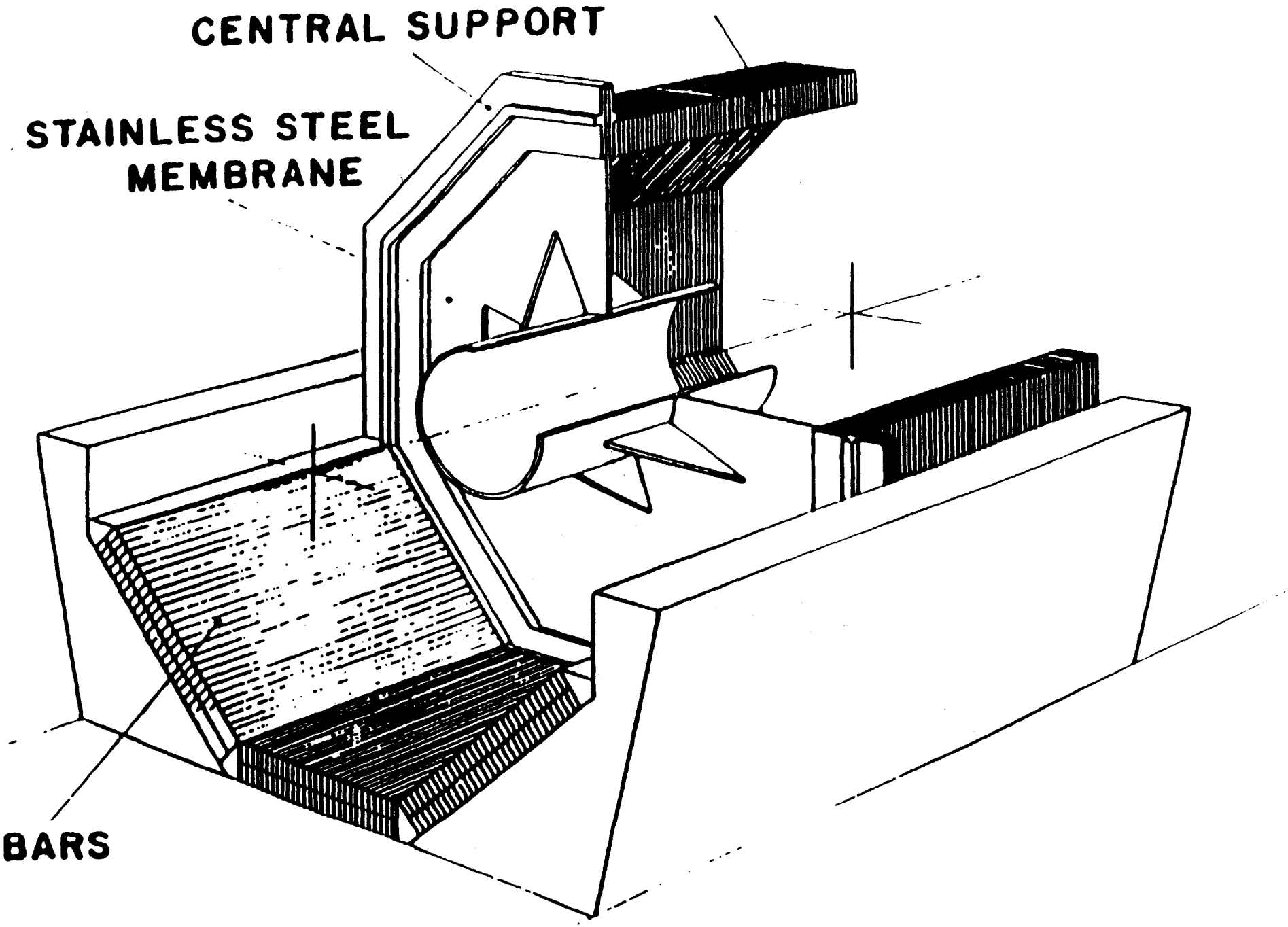
CENTRAL SUPPORT
STAINLESS STEEL
MEMBRANE
BARS

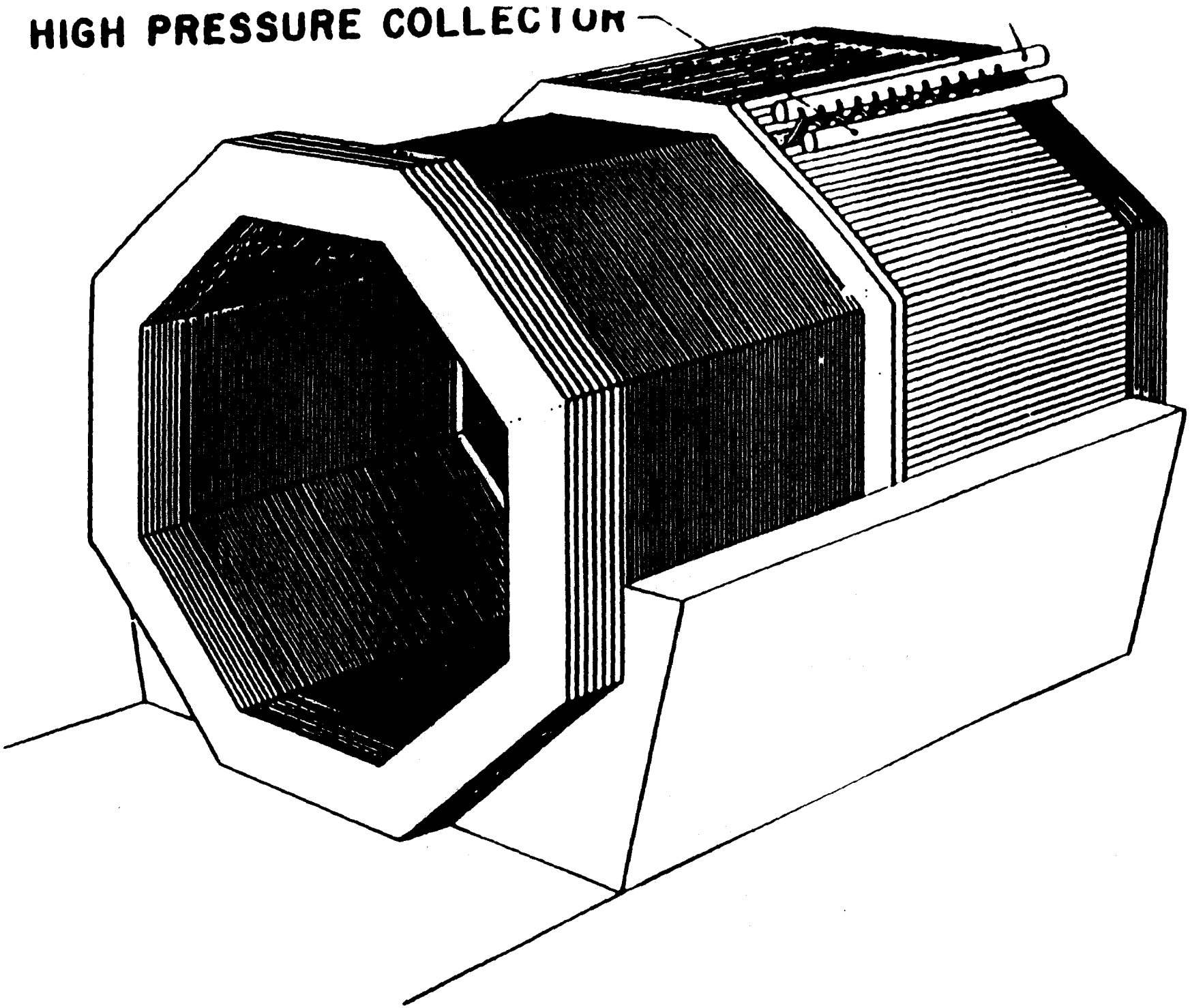
HIGH PRESSURE COLLECTOR

For Al coil magnet

L3 is ~ half scale prototype

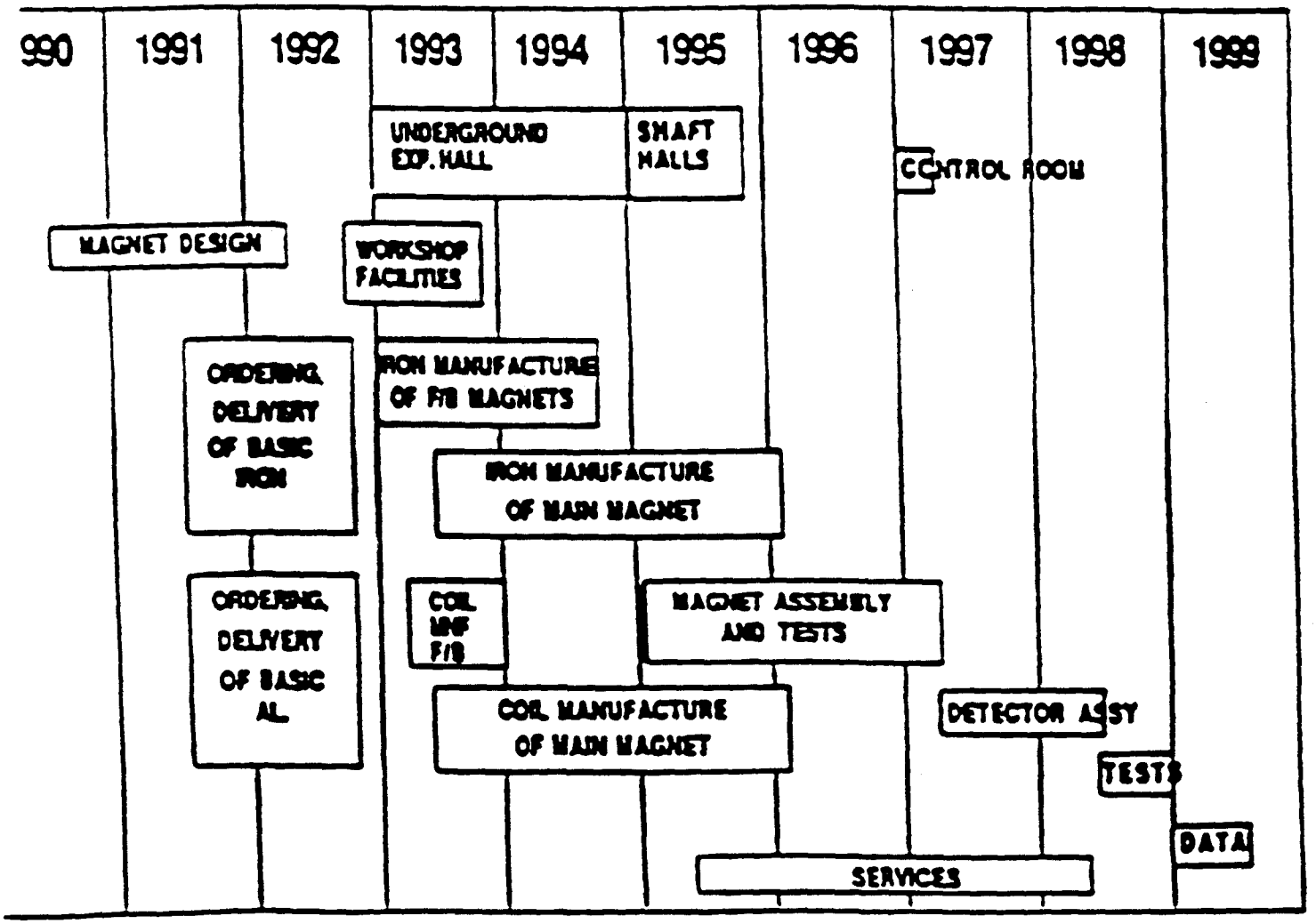

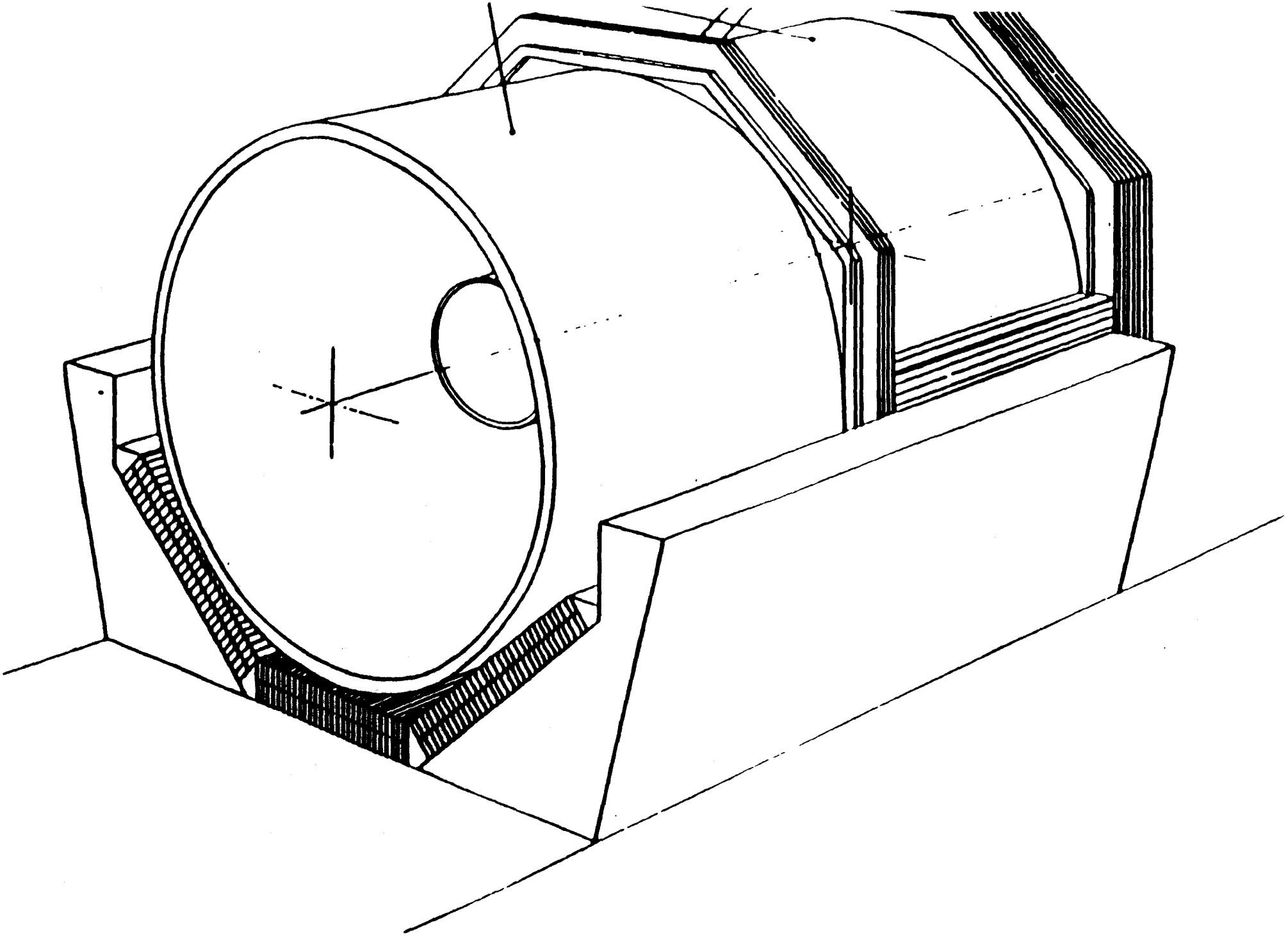

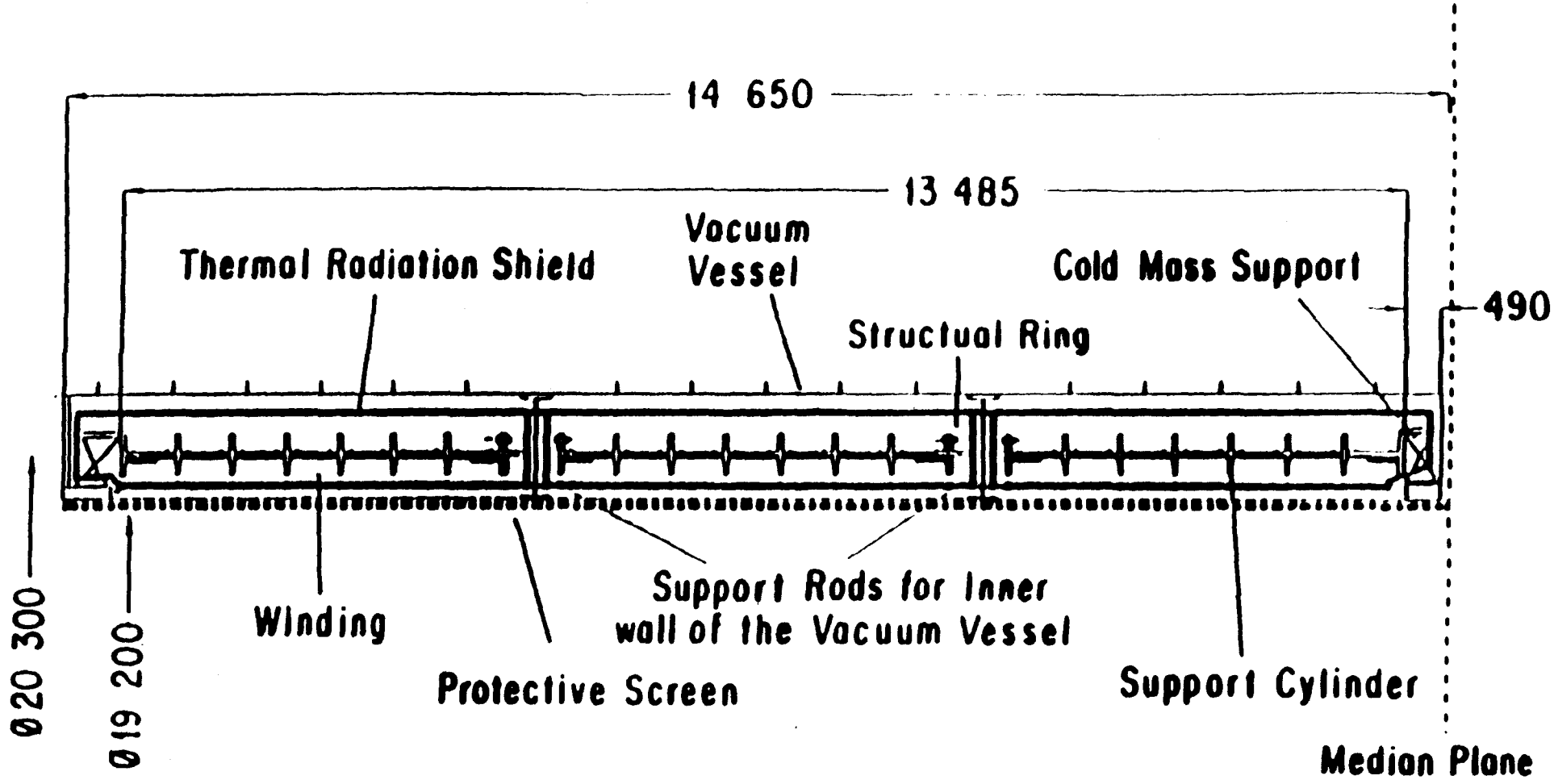
14 650
13 485
Thermal Radiation Shield
Vacuum Vessel
Cold Mass Support
490
Structual Ring
Ø20 300
Ø19 200
Winding
Support Rods for Inner wall of the Vacuum Vessel
Protective Screen
Support Cylinder
Median Plane

Superconducting Coil Cooling System

- *Livermore National Laboratory*
- *Redundant systems :*

  1) *Aleph thermal syphon (no pump) on support cylinder*

  2) *Forced flow system on coil*

Superconducting Coil

USSR R&D Program

Kurchatov Institute

Model Coil

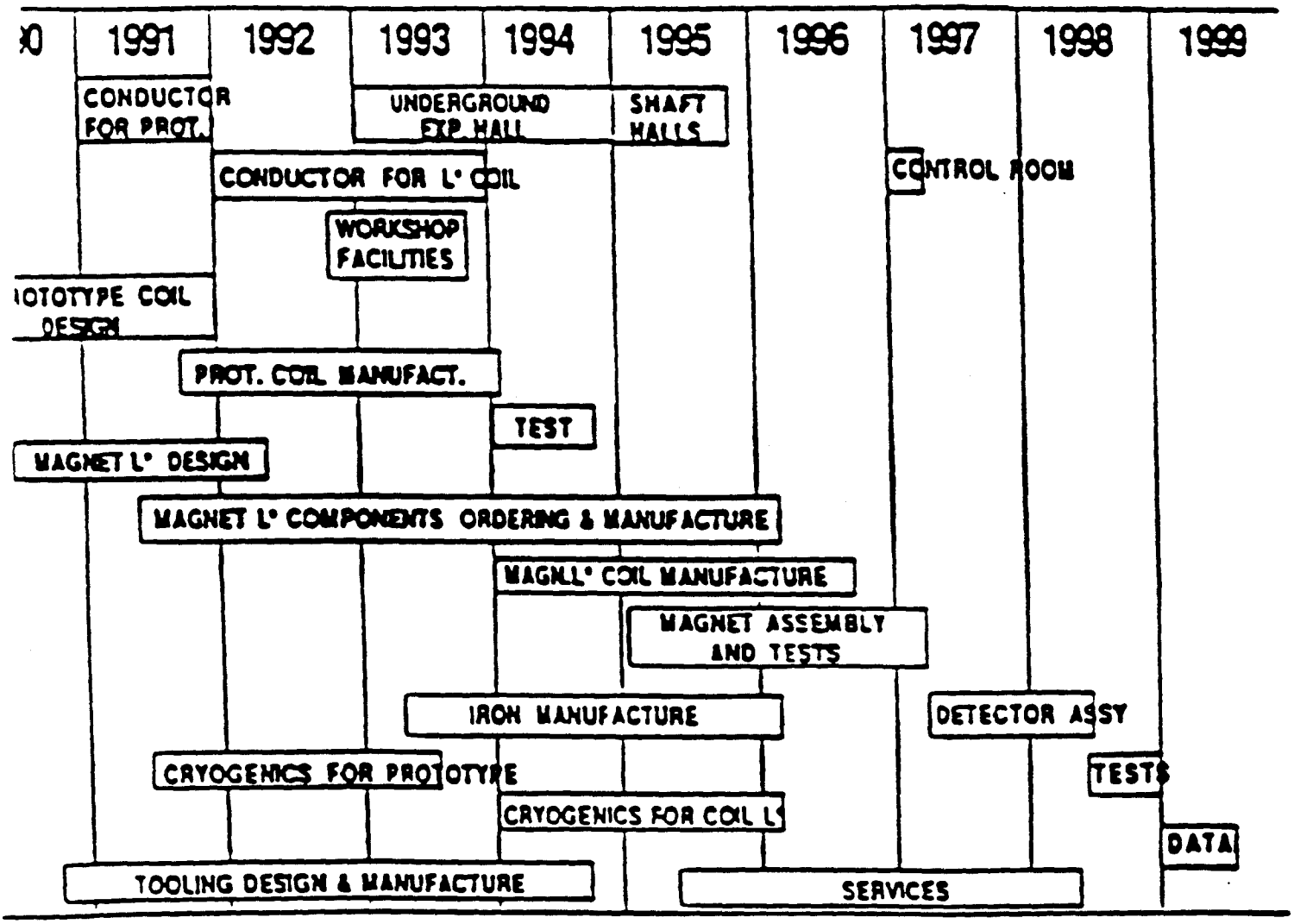

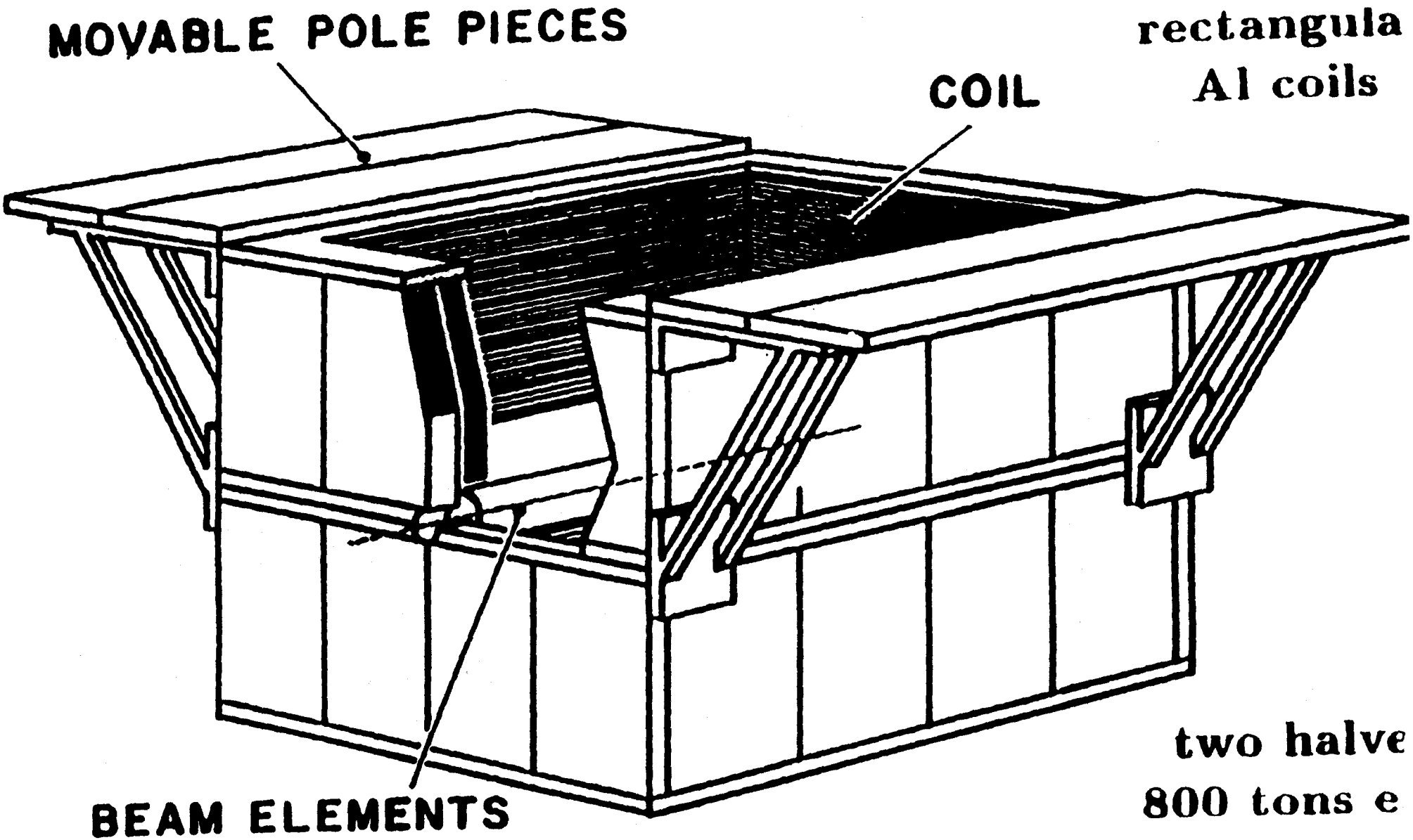

rectangula
Al coils

two halve
800 tons e

B = 0.3 Tesla, I = 16.3 kA
DC power = 2.5 MW/magnet

Magnet construction & Assembly
Participating Institutes :

USSR

Kurchatov Institute of Atomic Energy, Moscow
Institute of Theoretical & Experimental Physics, Moscow

Efremov Research Inst. of Electrophysical Apparata, Leningrad
All Union Research Institutes of Cable Industry, Moscow
Bochvar All Union Research Institute of Inorganic Materials, Moscow
Uhiba Metallurgical Plant, Ust-Kamenogorsk
Central Research Institute for Aerohydrodynamics, Moscow
Research Institute for Structural Materials "Prometei", Leningrad
Institute for Mounting and Assembly Technology, Moscow

USA

MIT Plasma Fusion Center, Cambridge

Lawrence Livermore National Laboratory, Livermore, CA

Oak Ridge National Laboratory, Oak Ridge, TN

R & D Funding Request
L* Magnet - FY 1991

	Request (k$)
10 Soviet Scientists at SSCL (at 30 k$/year/person)	300
Travel for 10 Scientists (at 2 k$/year/person)	20
Material and Supplies	180
TOTAL	500

A Precision Muon Detector

$$\frac{\Delta P}{P} \approx 2.4\% \quad \text{at} \quad P = 0.5 \text{ TeV}$$

$$2^0 < \Theta < 178^0$$

Momentum matching

$$P_{central\ tracker} = P_{muon\ chamber} + \Delta E_{H.C}$$

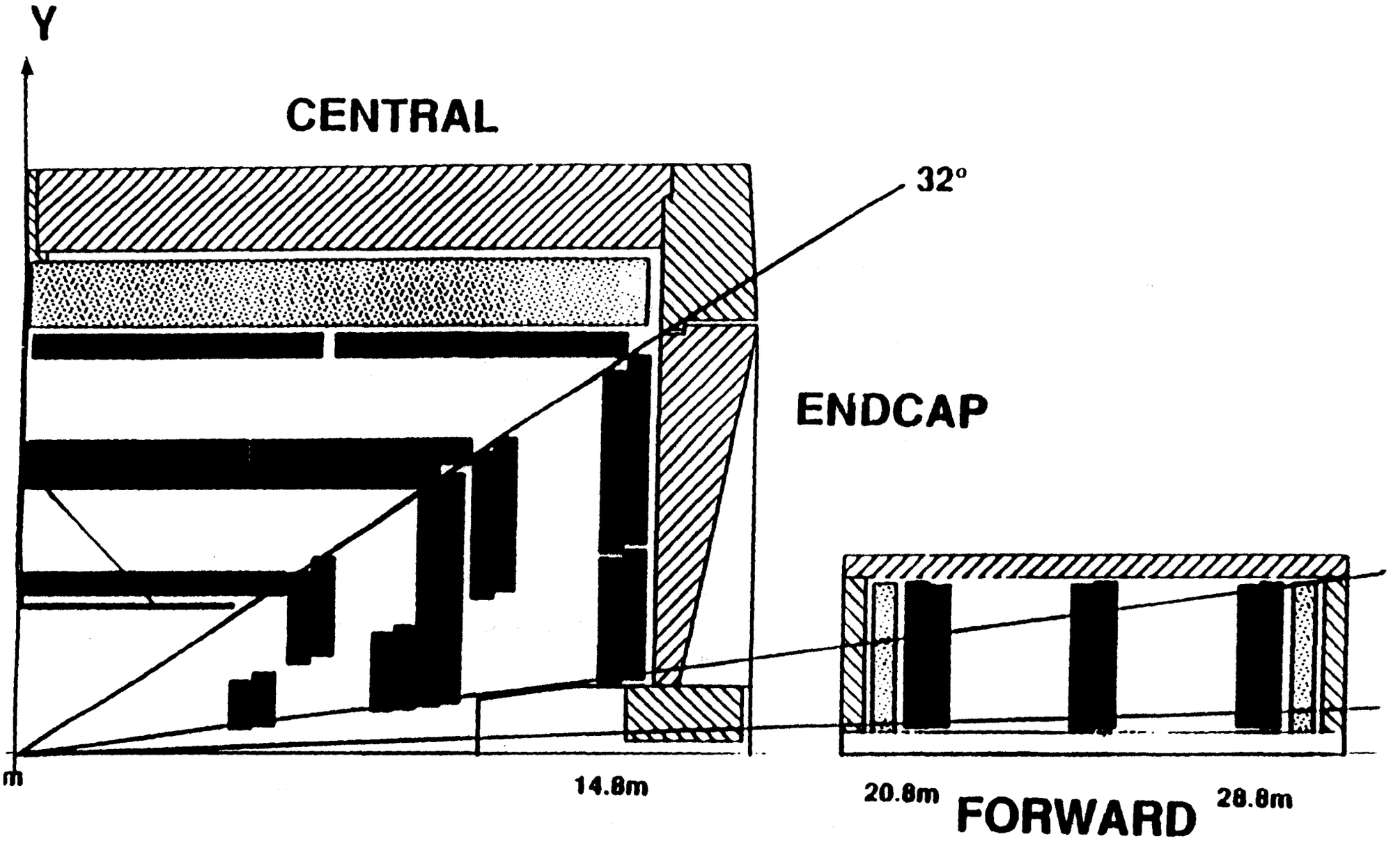

L* MUON SYSTEM

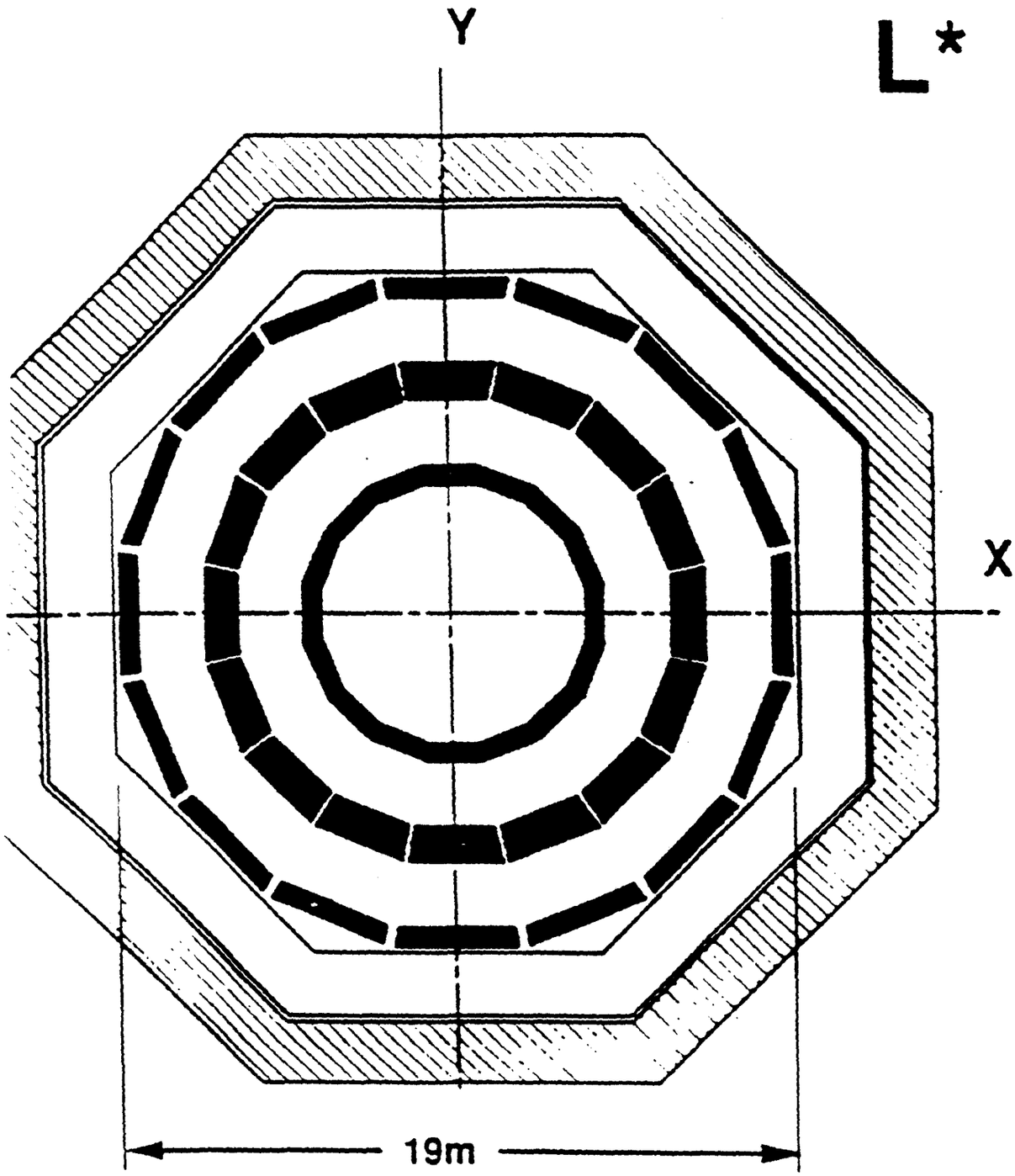

CENTRAL END VIEW

16 MODULES

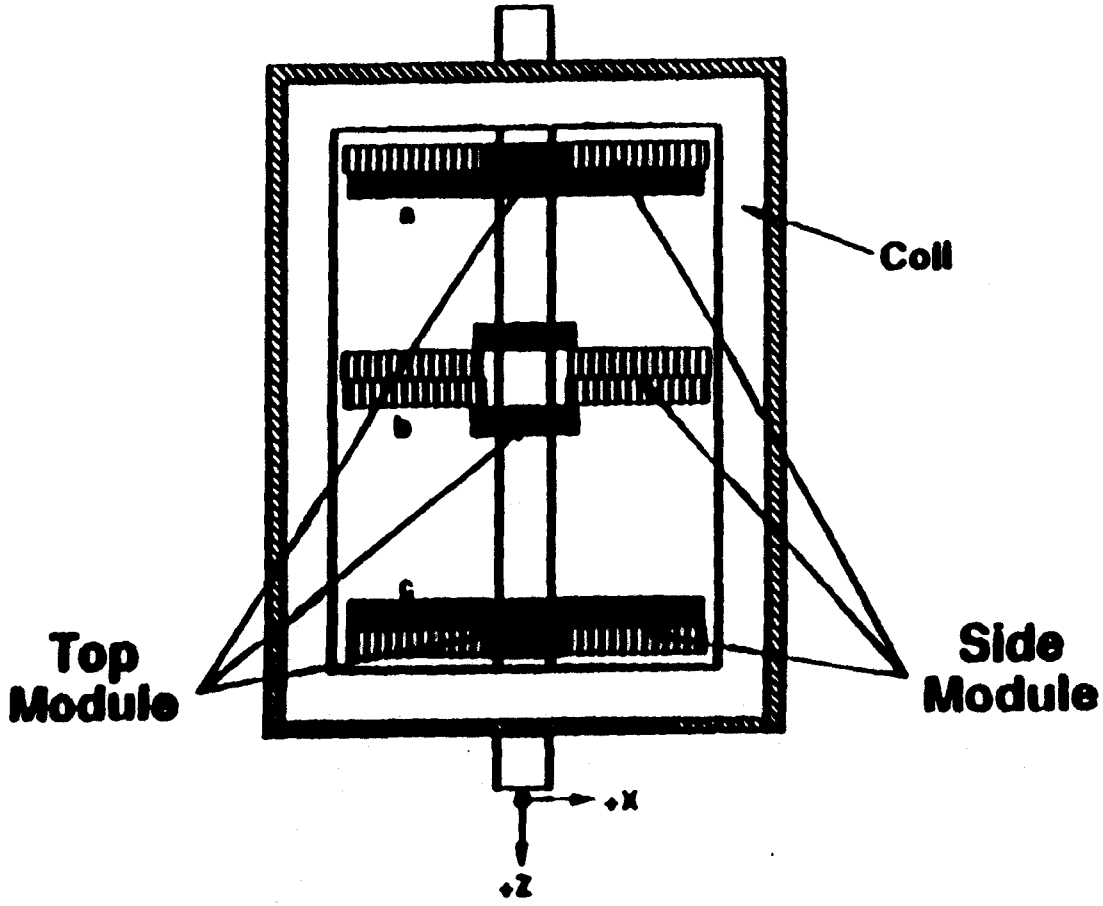

FORWARD REGION

TOP VIEW

(2°to 7.5°)

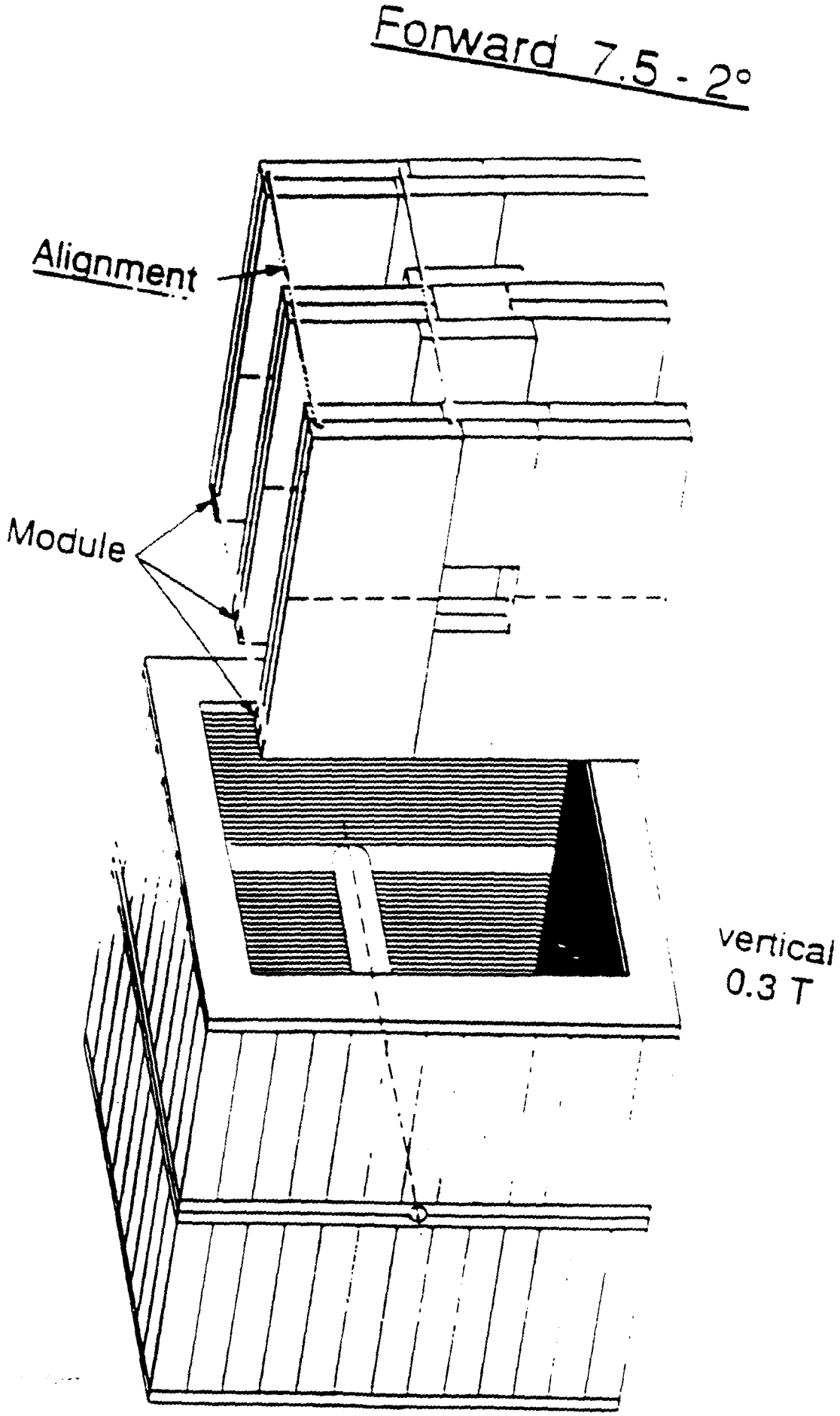
Forward 7.5 - 2°
Alignment
Module
vertical
0.3 T

Detector Resolution
at 0.5 TeV

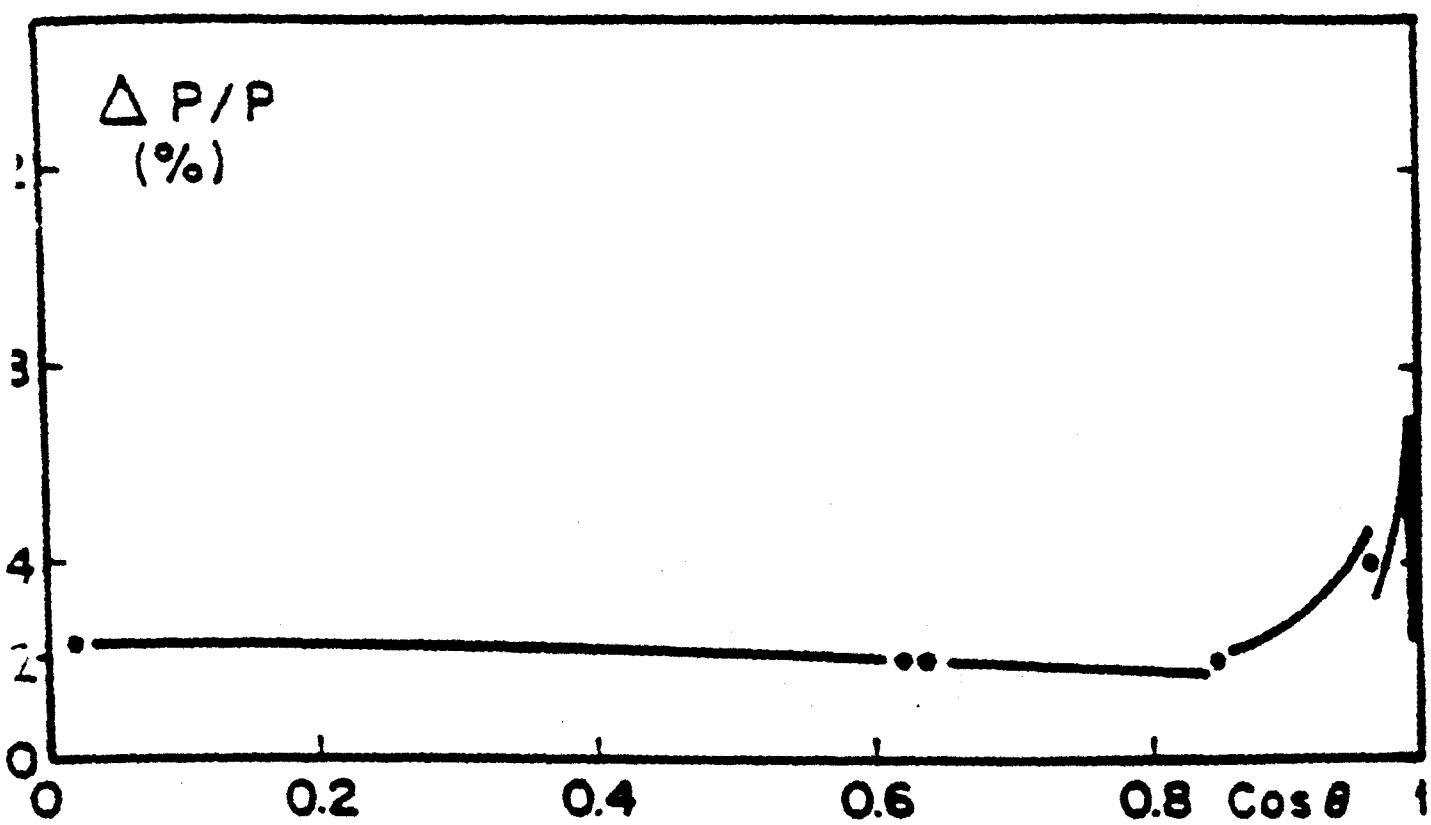

$$\frac{\Delta\Omega}{4\pi} = 0.9$$

Middle Chamber
32 + 32 wires offset

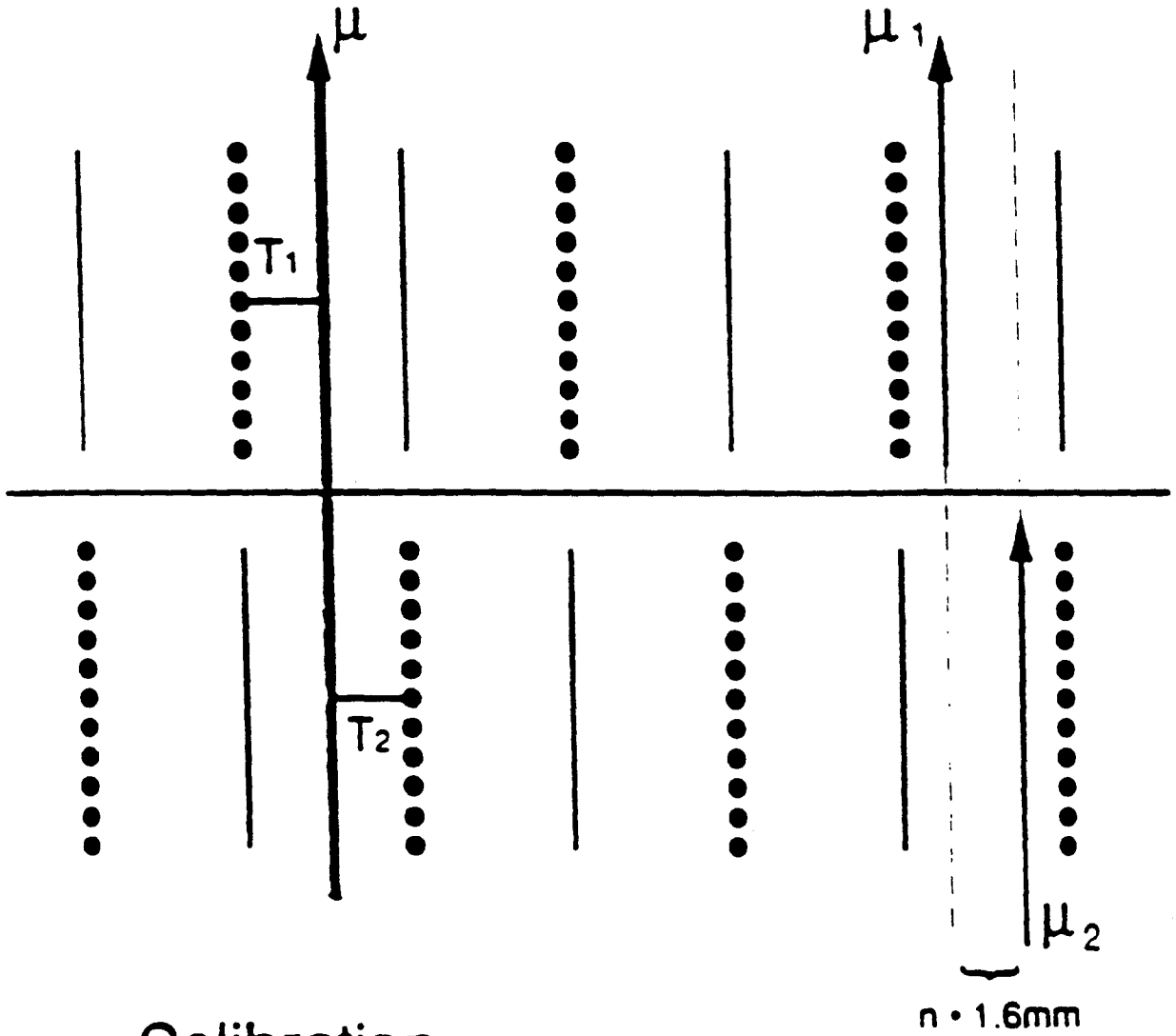

- <u>Calibration</u>
  $T_1 + T_2 = \text{const.}$

- Resolve
  L - R ambiguity

- Reject
  - n crossings off
  - cosmics, 4mm

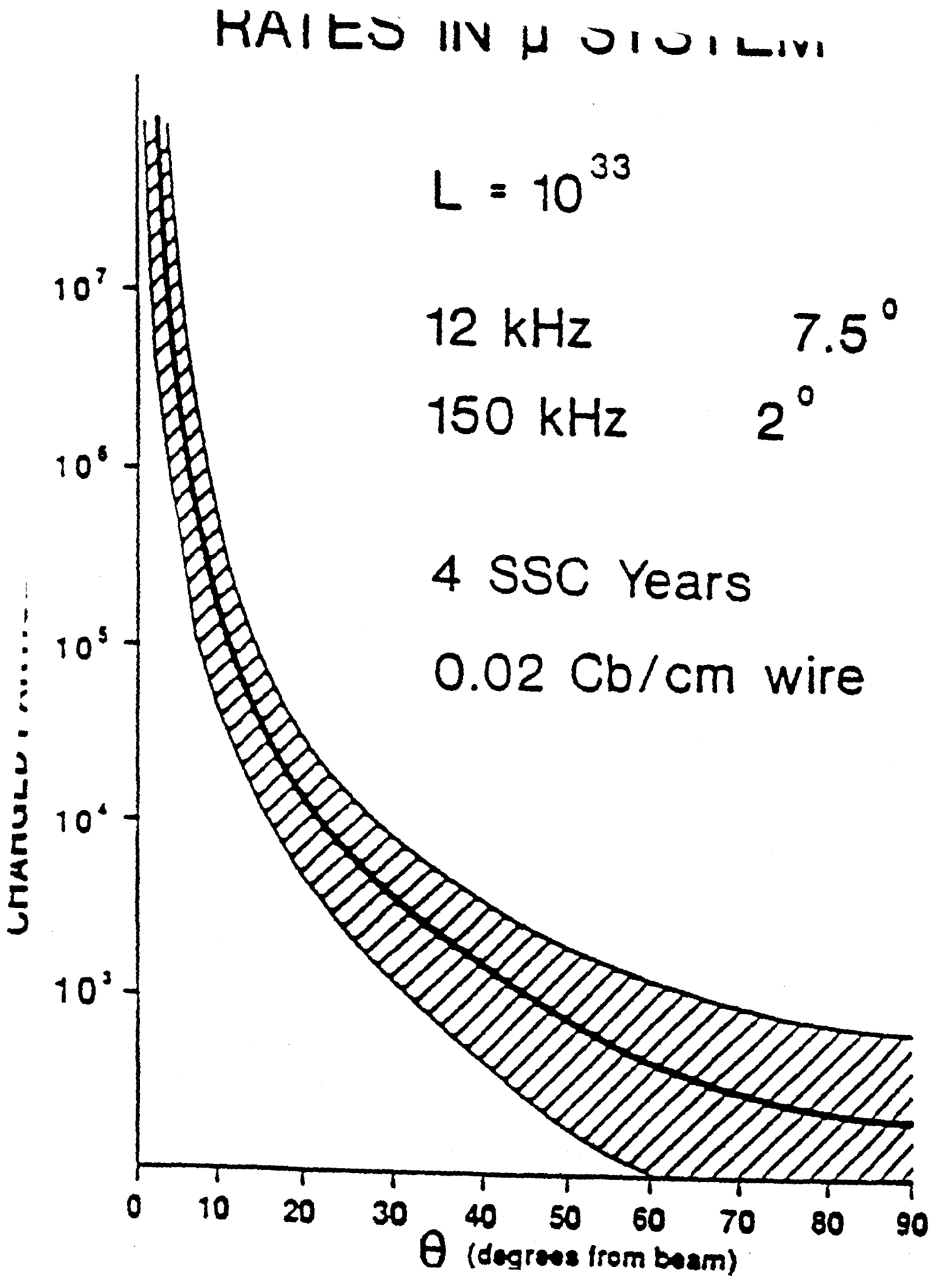
RATES IN μ SYSTEM
L = 10^33
12 kHz 7.5°
150 kHz 2°
4 SSC Years
0.02 Cb/cm wire
CHANNELS
10^7
10^6
10^5
10^4
10^3
0
10
20
30
40
50
60
70
80
90
θ (degrees from beam)

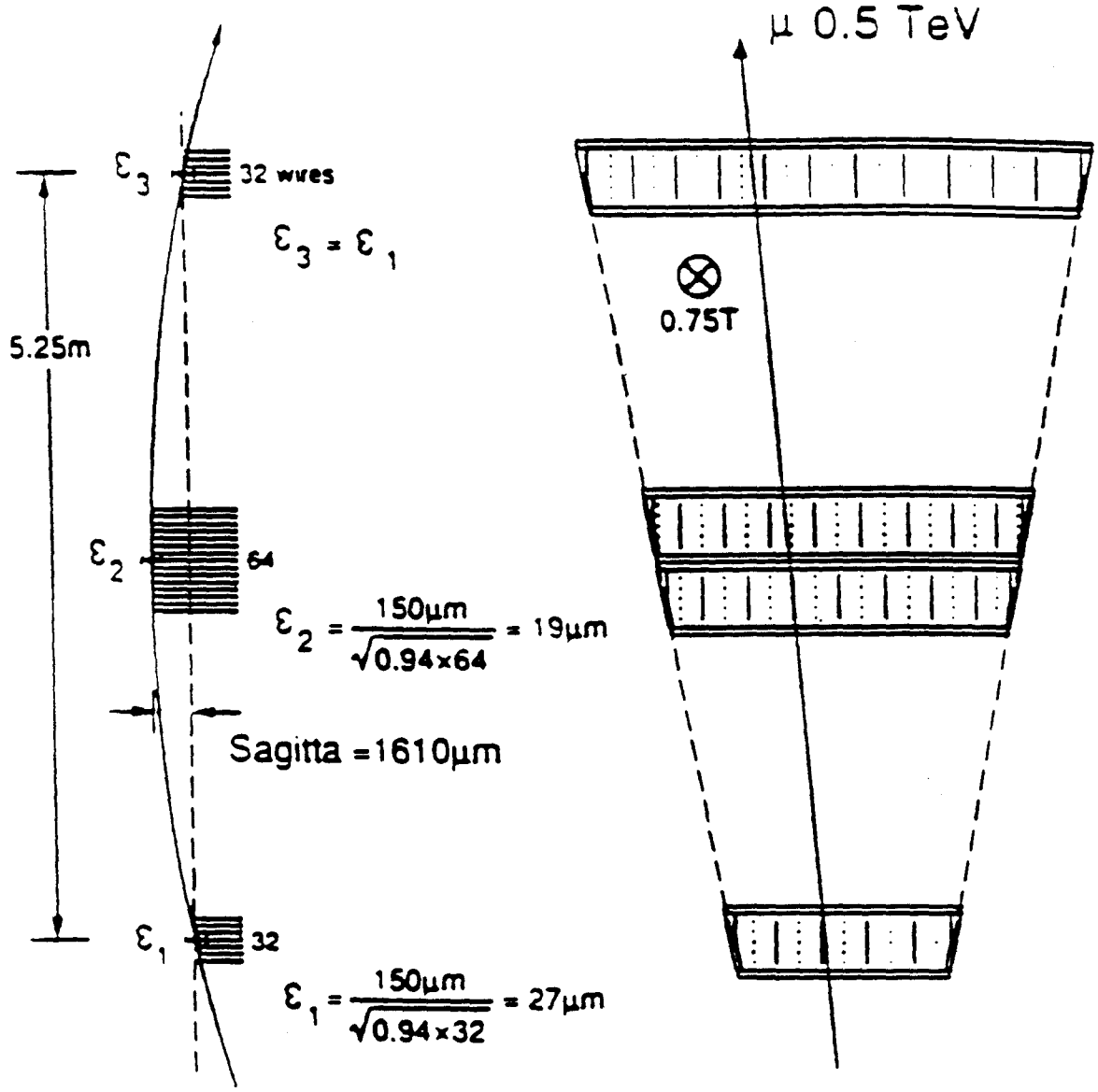

$$\Delta s = \sqrt{\frac{1}{2}\,\varepsilon_1^2 + \varepsilon_2^2 + \Delta s_{sys}^2 + \Delta s_{ms}^2}$$

$$= \sqrt{\frac{1}{2}27\mu m^2 + 19\mu m^2 + 20\mu m^2 + 15\mu m^2}$$

$$= 37\mu m$$

$$\boxed{\frac{\Delta s}{s} = 2.4\%}$$

R&D on Instrumentation

1974 High rate proportional chambers developed (6k wires) 10^{10}/chamber (ran for 3 years)

1976 Developed drift chambers with field shaping profiles (800 m^2 Argon-Isobutane at ISR) used at SLAC, UA1; MARK-J 600 m^2 (σ = 300μm, ran for 5 years)

1979 Developed drift tubes for vertex (straw tubes) σ = 250μ High rate 130μm/wire chamber for ISABELLE

1982 Developed L3 multisampling drift chambers Δs = 50 μm alignment $\lesssim$ 30μm

1990 Continue R&D for L*

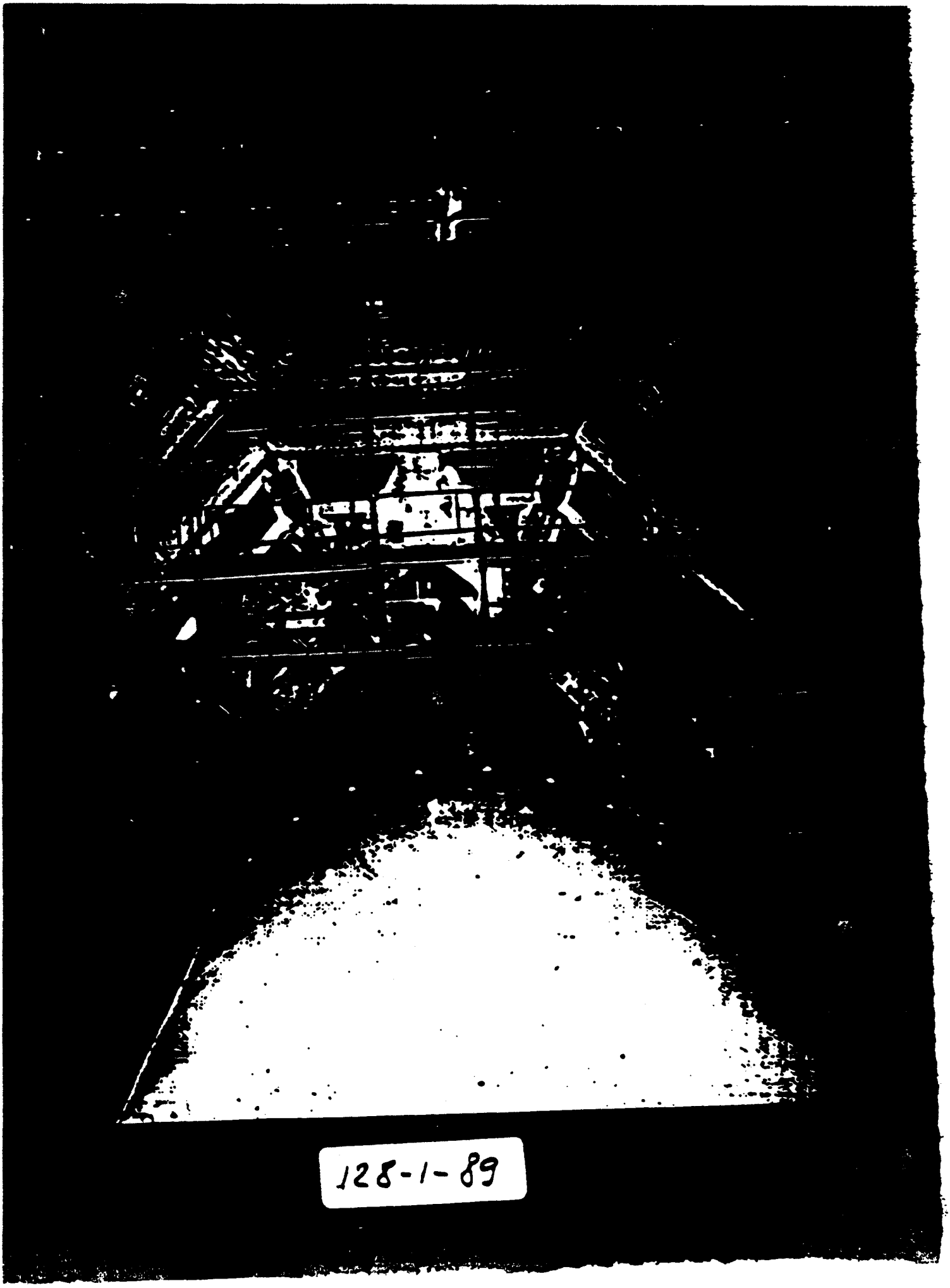

128-1-89

L3 AND L• PRECISION CHAMBERS

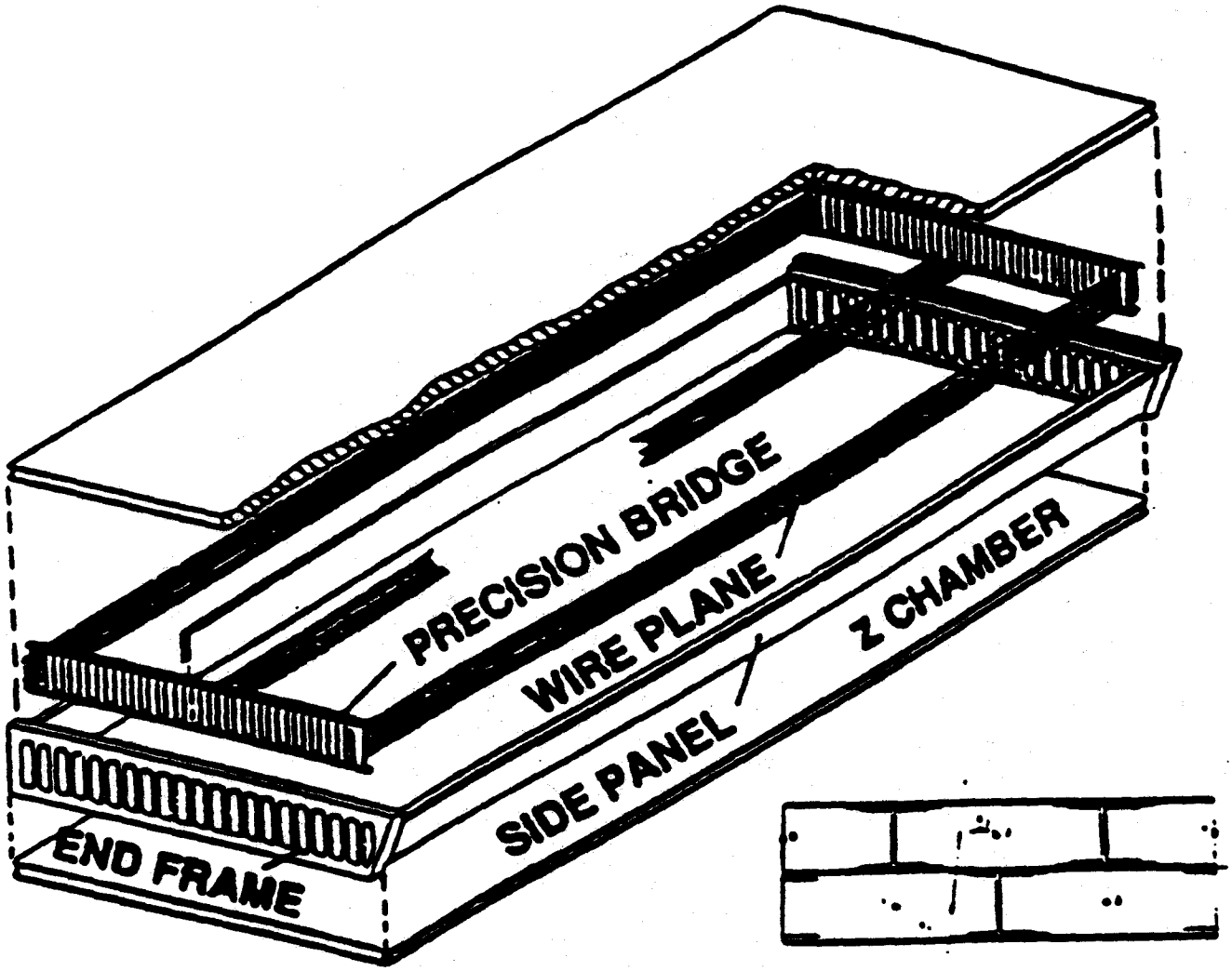

- ACCURATE
- MASS PRODUCED
- QUALITY CONTROL
- TEST PROCEDURES

Z CHAMBERS IN L• CENTRAL REGION
IN TRIGGER WITH
RESISTIVE PLATE COUNTERS

L3 AND L*
WIRE POSITIONING ACCURACY

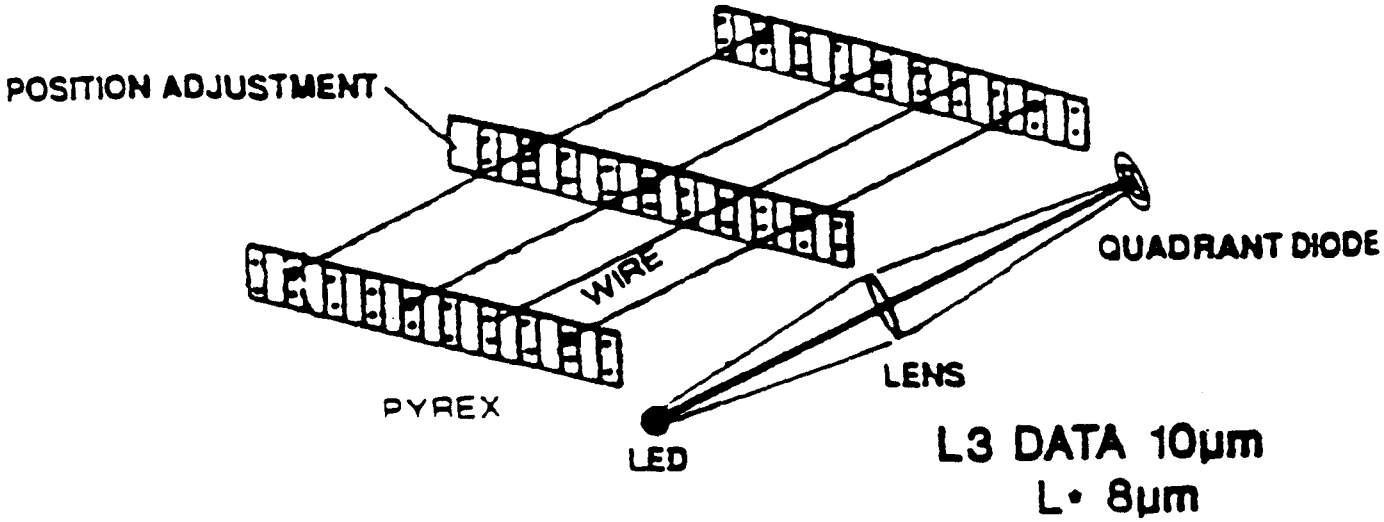

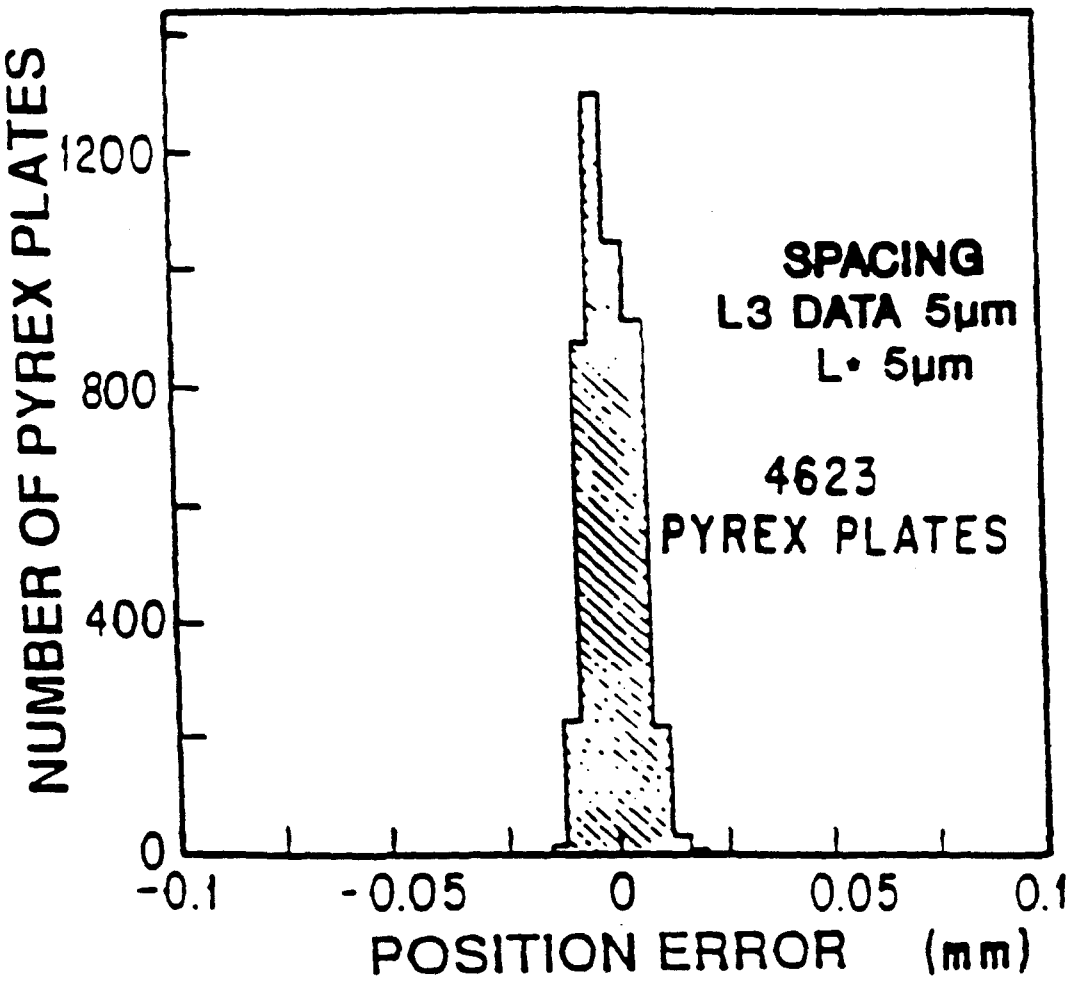

L* Single wire resolution

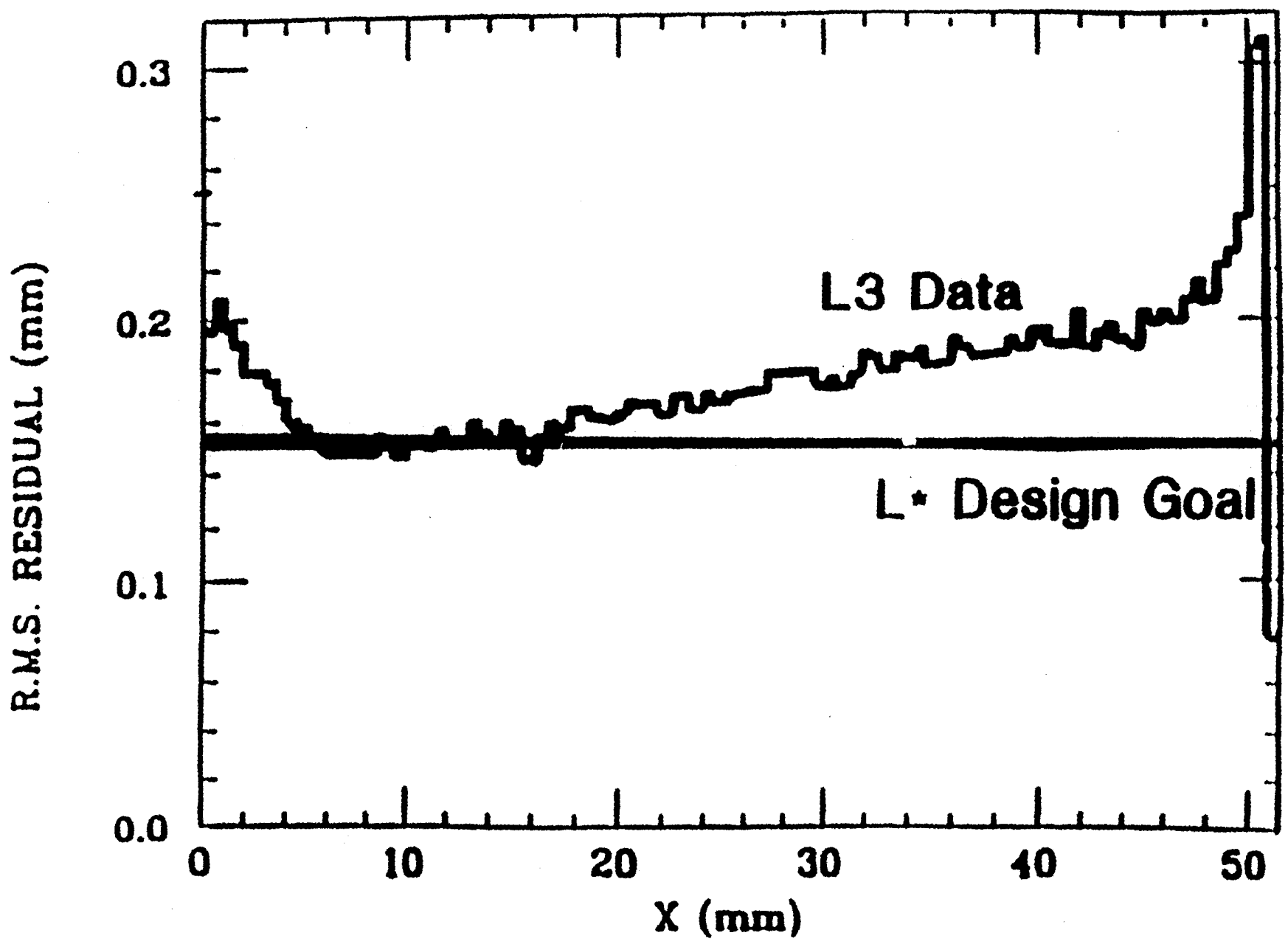

L* Alignment

	L*	L3 - Achieved
P-Measurement		
3 Layers - Absolute	8 μm	15 μm
Monitored - Relative	1 μm	0.2 μm
Global		
All Tracks Point To Intersection	0.7 mm	1.0 mm

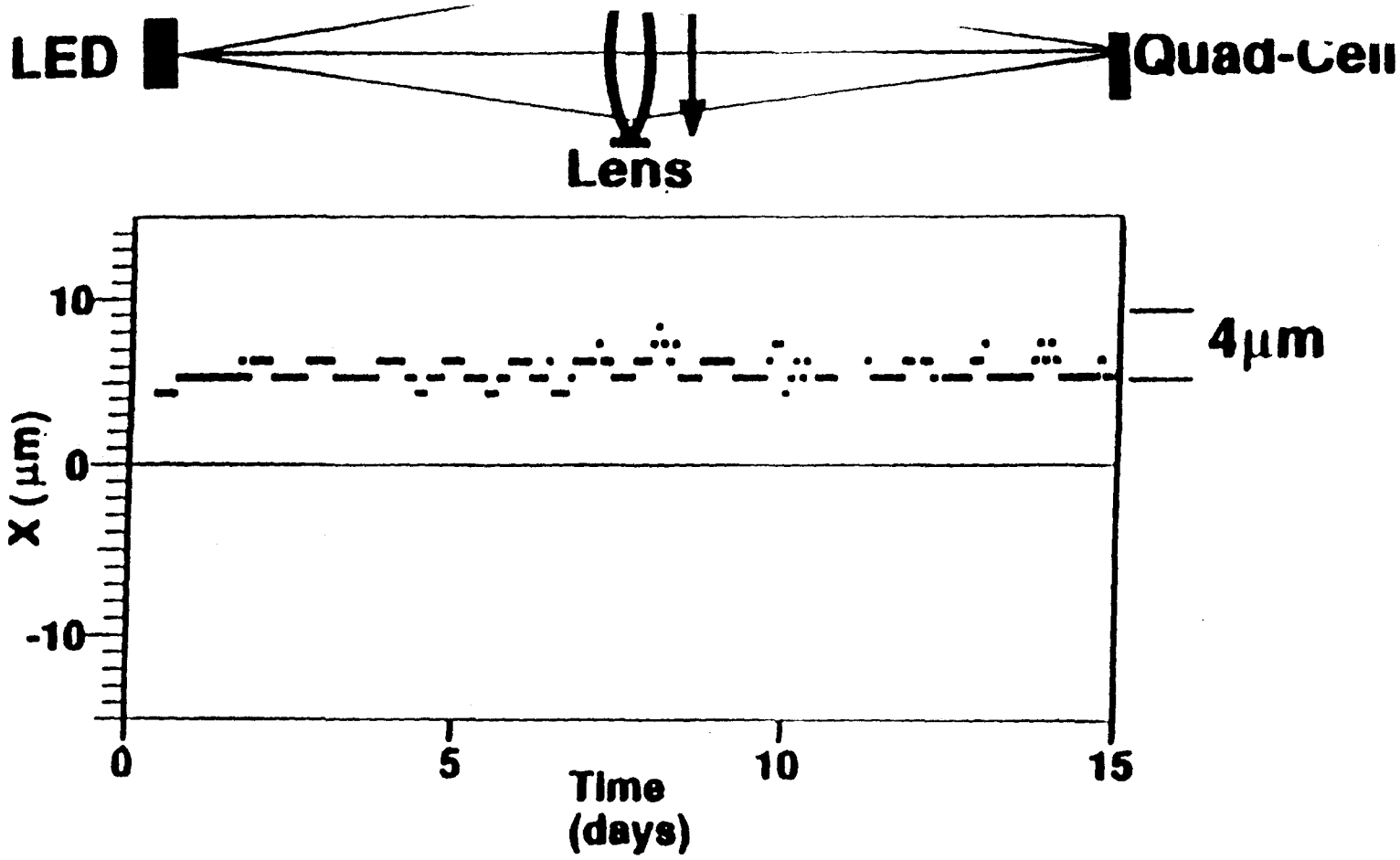

Fifteen -day stability of the L3 Muon Chambers within an octant

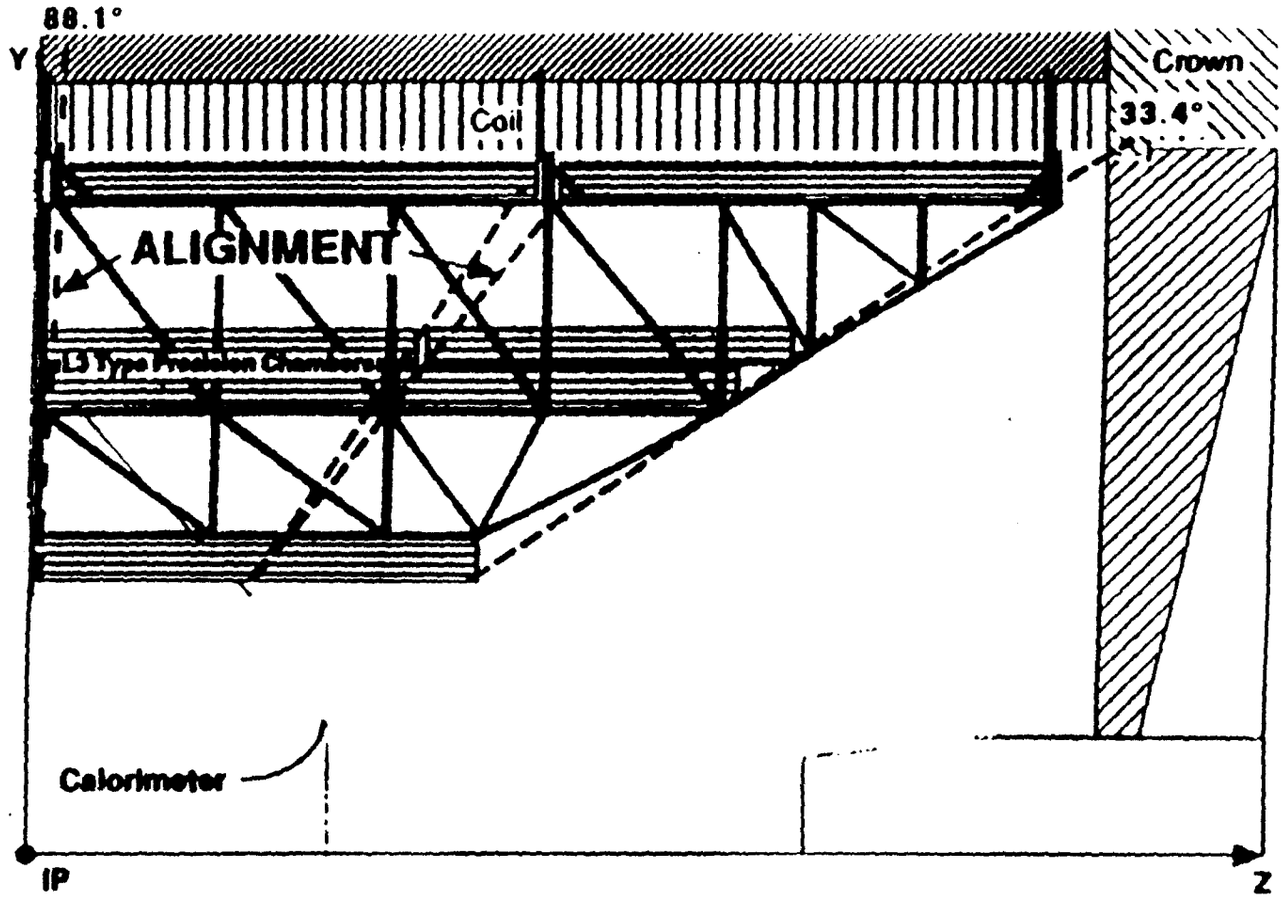

CENTRAL

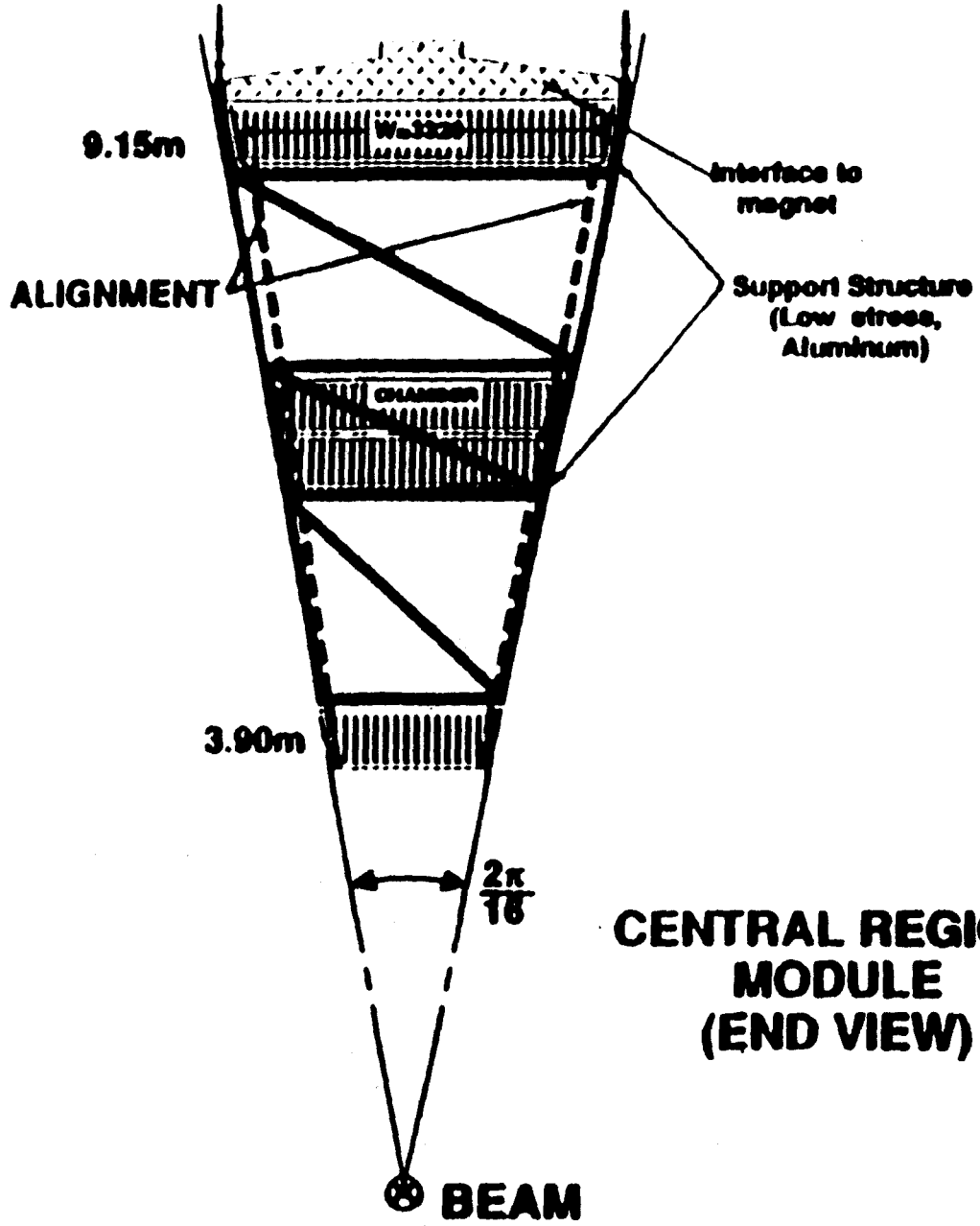

CENTRAL REGION MODULE (END VIEW)

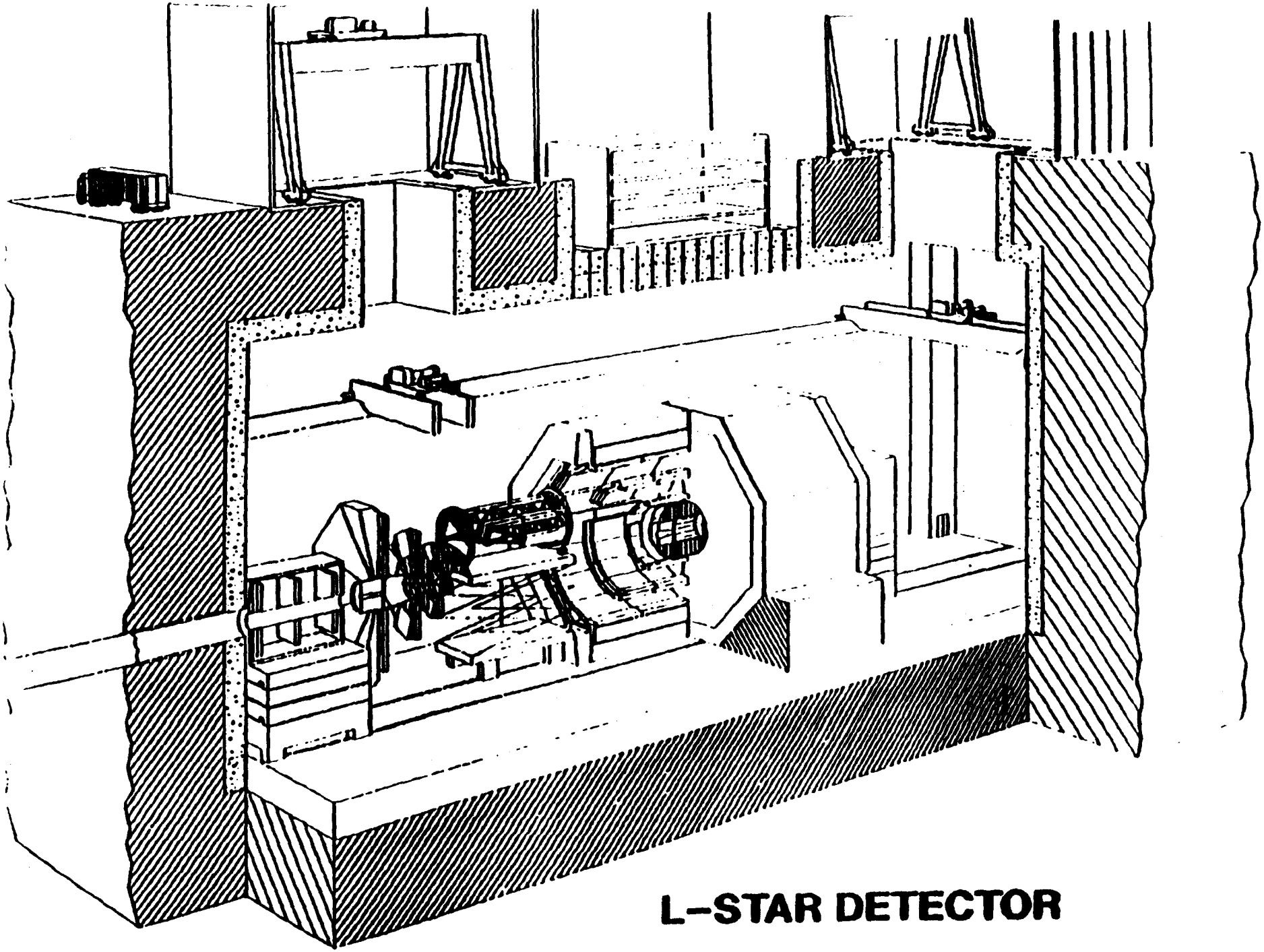

L–STAR DETECTOR

L* CHAMBER INSTALLATION

ASSEMBLY

HANDLING

TEST ALL MODULES

INSTALL

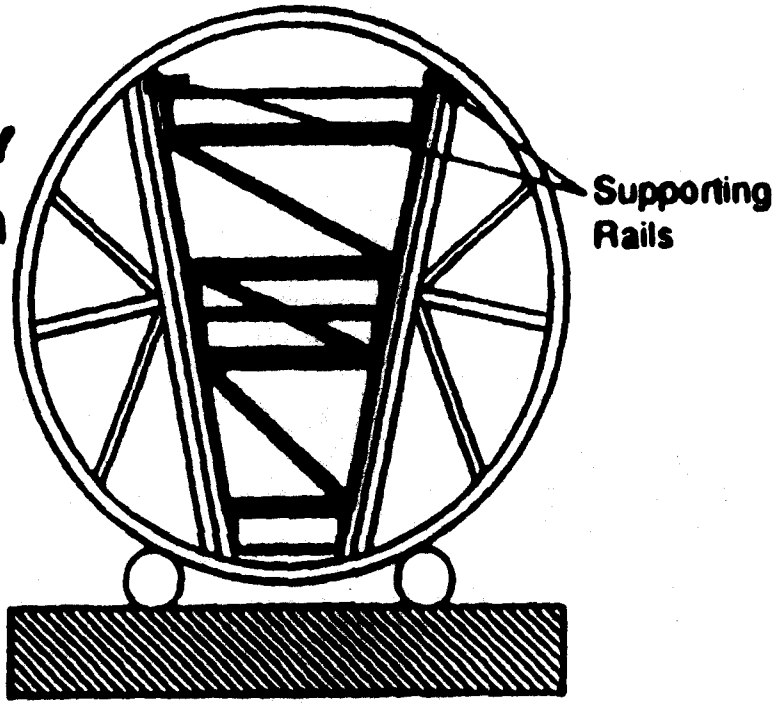

L*

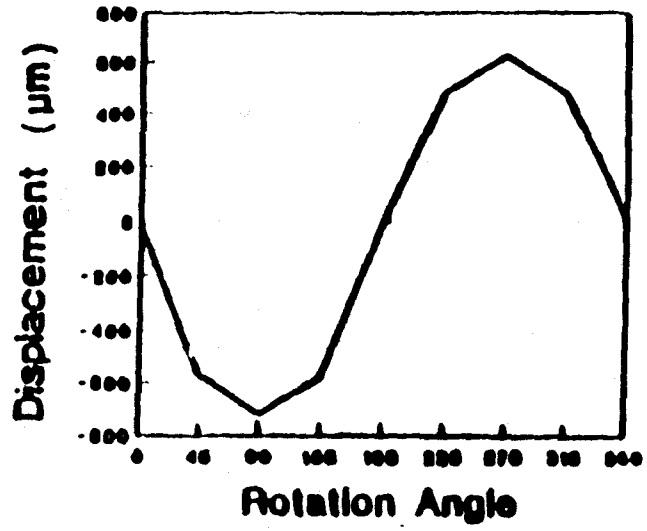

L3 REPRODUCIBILITY DATA < 6µm

L* R&D MILESTONES

	FY90	FY91	FY92
Request to DOE			
Muon Chambers	Freeze Conceptual Design	Produce & Evaluate Prototypes	Full Length Chamber Model
Gas	Complete Measurement Setup	Measure 10 Mixtures	Chamber with Final Cell
Structural Design & Analysis	Freeze Concepts Complete All Structure Models	Detailed Design Prototypes Finite Element Analysis	Assemble, Evaluate Prototypes Computations for Alignment
Request to Swiss Authorities			
Alignment Systems	Design Test Stand	Evaluate Prototypes	Test System
Electronics & Data Transfer	Define Architecture	Develop Chips, Prototypes	Evaluate, Verify

DETECTOR CONSTRUCTION

CENTRAL	MIT, LLNL
ENDCAP	ETH
FORWARD	China

Fast Hadron Calorimeter

down to $\Theta > 2^0$

Also : very forward part down to $|\theta| = 0.3^0$

made of

lead-steel-silicon or liquid scintillator sandwich

Shaping time : 15 ns

Tower geometry :

$$\Delta\eta\Delta\varphi = 0.04 \times 0.04$$

9 longitudinal segmentation for muon identification, tracking & pattern recognition

us : 190/333 cm

caps : 204 Tons

us : 20/138 cm

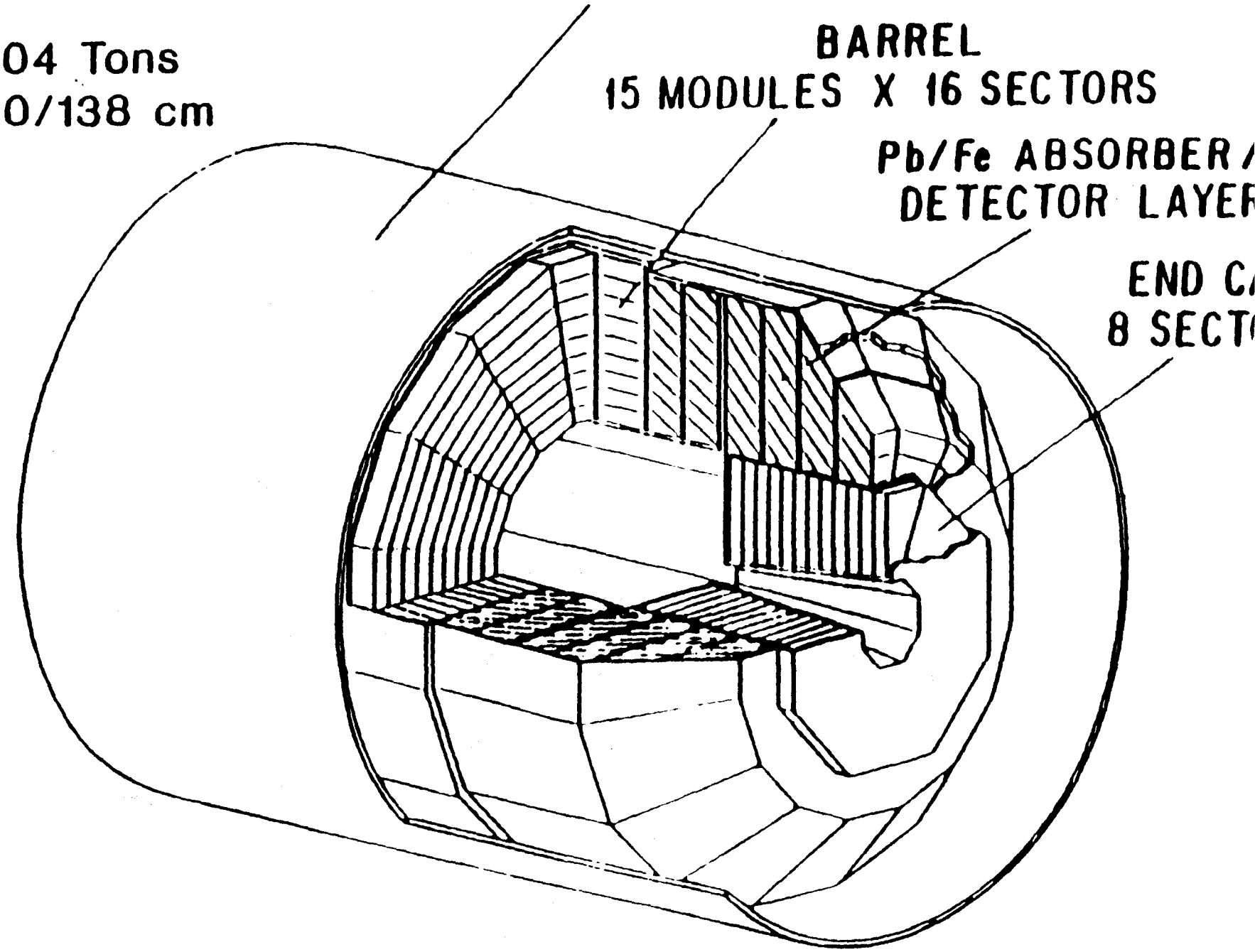

HADRON CALORIMETER

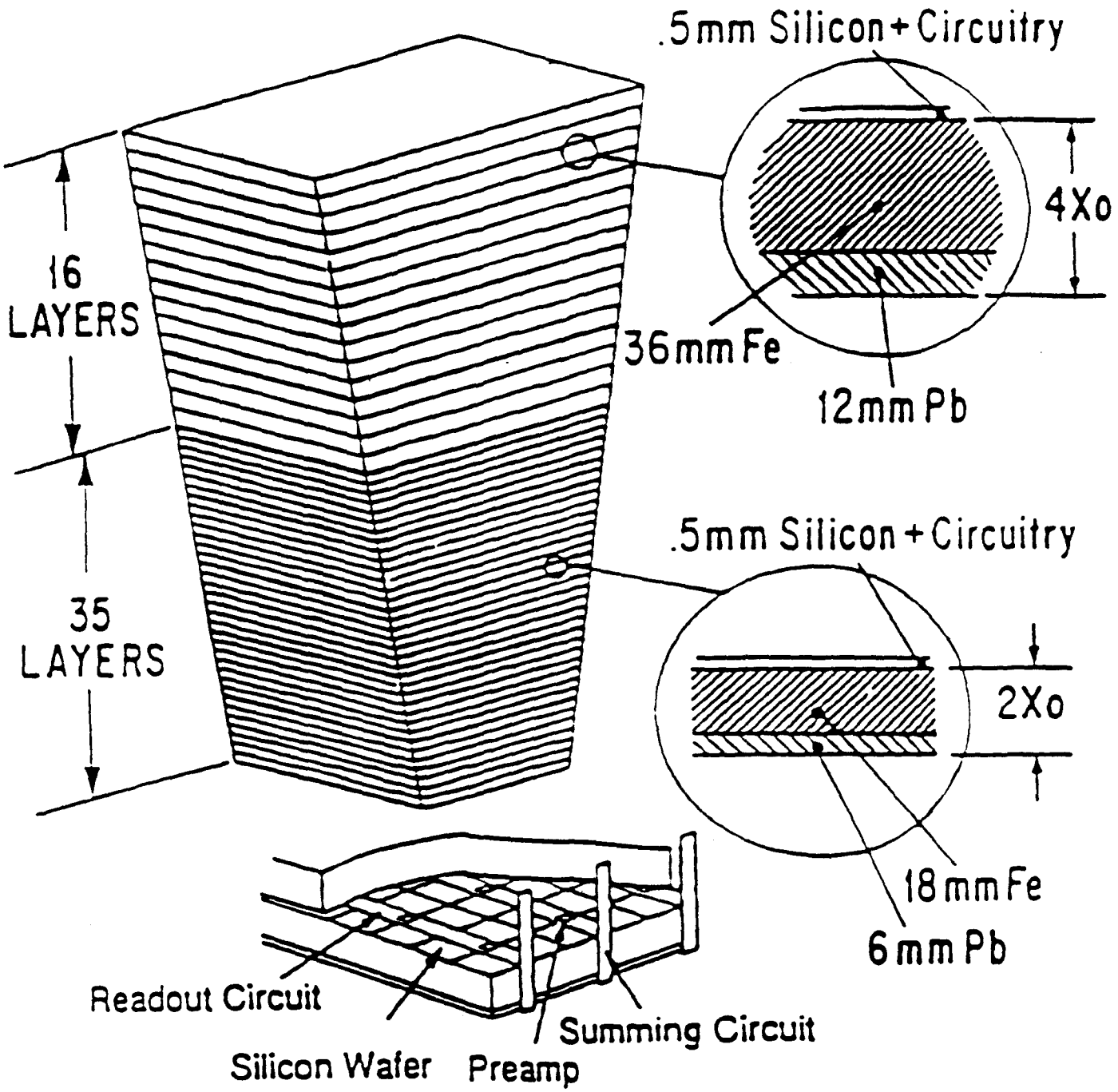

The calorimeter absorber/detector structure at 90°.

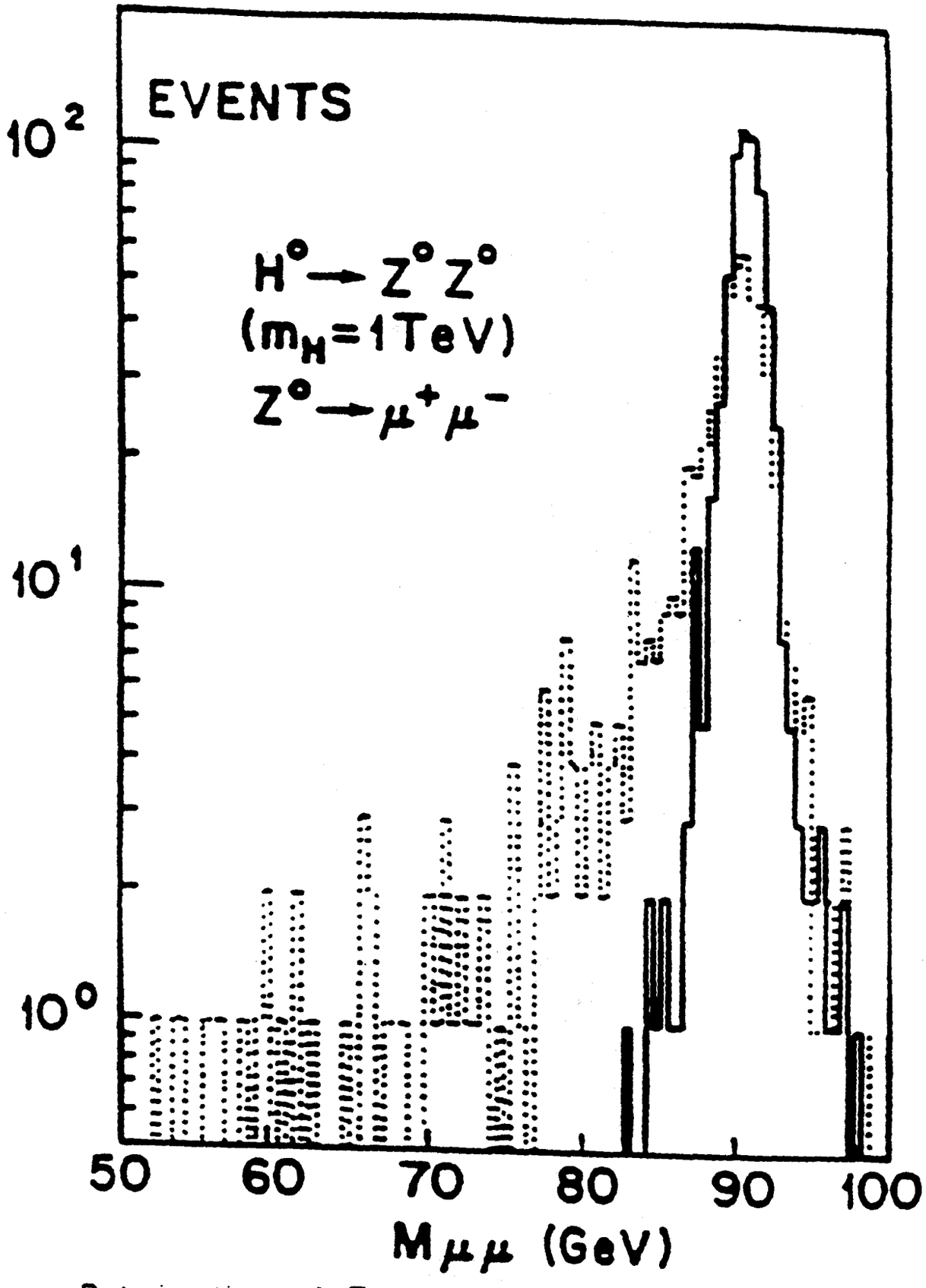

Deterioration of Z -> 2μ mass resolution due to fluctuations of muon energy loss in 12 λ calorimeter (dotted line). Correction for these fluctuations will be made by calorimeter sampling measurements (solid line).

25 Years of Electrons, Muons and Photons

64 — 72	72 — 74	74 — 78	78 — 83	83 — 90
DESY	BNL	ISR	PETRA	LEP
$\gamma \to e^+ e^-$	$J \to e^+ e^-$	$p\ p \to \mu^+ \mu^-$	$e^+ e^- \to Q\bar{Q}g$	$Z^0 \to l^+ l^-, Q\bar{Q}$
QED $R < 10^{-14}$ cm $\rho, \omega, \phi \to e^+ e^-$ SU3	New Quarks	Scaling	Gluons - α_s $e^+ e^- \to \mu^+ \mu^-$ QED $R < 10^{-16}$ cm	3 Families g_A, g_V $B \to \mu + X$
$\frac{\Delta M}{M} = 1\%$	$\frac{\Delta M}{M} = 0.1\%$	$\Omega = 2\pi$	$\Omega = 4\pi$	$\Omega = 4\pi$
$\frac{ee}{hh} = 10^{-8}$	$\frac{ee}{hh} = 10^{-10}$	$\frac{\mu\mu}{hh} = 10^{-6}$	e, μ, jets	e, μ, γ $\frac{\Delta p}{p} = 1\%$
$10^{35} cm^{-2} s^{-1}$	$10^{36} cm^{-2} s^{-1}$	$10^{32} cm^{-2} s^{-1}$	$10^{30} cm^{-2} s^{-1}$	$10^{31} cm^{-2} s^{-1}$
$p_1 = p_2$	$p_1 = p_2$ high rate chambers	large area chambers		$p_1 = p_2$ (e, γ) $p_1 = p_2 + \Delta E$ (μ)

Funding Request to SSCL
R&D for L* Detector

	FY90	FY91	FY92	TOTAL
MAGNET	0.0	0.5	0.5	1.0
MUON DETECTOR	1.0	4.6	2.8	8.4
HADRON CALORIMETER	0.0	2.6	2.1	4.7
E-M CALORIMETER	0.0	2.9	3.1	6.0
CENTRAL TRACKER	0.0	2.2	2.2	4.4
FORWARD CALORIMETER	0.0	0.4	0.4	0.8
DAQ + TRIGGER	0.0	2.9	4.2	7.1
COORDINATION	0.0	0.5	0.5	1.0
TOTAL	1.0	16.6	15.8	33.4

Europe Physicists in L★

Country	Institute	Number of Physicists	Spokesperson	
Switzerland	ETH Zürich	35	H.Hofer	Professor
	Univ. Geneva	1	M.Bourquin	Professor
Germany	RWTH Aachen	27	K.Lübelsmeyer	Director
Italy	Univ. Florence	12	P.Spillantini	Professor
	Univ. Milan	6	P.G.Rancoita	Professor
	Univ. Naples	12	C.Sciacca	Professor
	Univ. Rome	7	B.Borgia	Director
France	LAPP Annecy	4	M.Vivargent	Professor
Hungary	Budapest	5	E.Nagy	Professor
Bulgaria	CLANP Sofia	7	B.Betev	Professor

Asia Physicists in L★

Country	Institute		Physicists	Spokesperson	
China	IHEP	*Beijing*	53	S.X.Fang	*Director*
	USTC	*Hefei*	14	C.H.Gu	*President*
	SIC	*Shanghai*	28	J.K.Guo	*Director*
Taiwan	High Energy Physics Group		11	H.M.Hsia	*President*
Korea	Kyungpook Univ.		3		
	Gyeongsang Univ.		4		
	Chungnam Univ.		1		
	Cheonnam Univ.		1		
	Kangreung College		2	Y.Kim	*Professor*
	Korea Univ. Seoul		1	D.Song	*Professor*
	Seoul Univ.		1		
	Sangil College		1		
	Taegu Univ.		1		
Japan	Saitama College		1	T.Doke	*Professor*
	Waseda Univ.		2		

USSR AT L*

MAGNET PROJECT RESPONSIBILITY:
KURCHATOV ATOMIC ENERGY INSTITUTE,MOSCOW
L* PARTICIPANTS 61: E.Velikhov Director General
S.Belyaev Research Director
N.Chernoplekov Division Leader
CALORIMETER PROJECT RESPONSIBILITY:
ITEP, MOSCOW
L* PARTICIPANTS 71: V.Shevchenko Vice Director
Yu.Galaktionov Division Leader
JINR, DUBNA
L* PARTICIPANTS 55: D.Kiss Director General
I.Savin Research Director
I.Golutvin Vice Director
IHEP, SERPUKHOV
L* PARTICIPANTS 10: A.Lebedev Division Leader

RESPONSIBILITY AREAS UNDER DISCUSSION:
YEREVAN PHISICS INSTITUTE,YEREVAN
L* PARTICIPANTS 21: A.Amatuni Director General
LENINGRAD NUCLEAR PHYSICS INSTITUTE:
L* PARTICIPANTS 29: A.Vorobyov Director General
INSTUTUTE OF NUCLEAR PHYSICS,NOVOSIBIRSK
L* PARTICIPANTS 3: A.Skrinsky Director General
INSTITUTE OF PHYSICS, TBILISI, GEORGIA
L* PARTICIPANTS 15
INSTITUTE OF PHYSICS, TARTU, ESTONIA
L* PARTICIPANTS 2

L* Support Outside US

Foreign countries will support the L Experiment through:*

Financial Support
Material
Complete Detector Subsystems
Workshop Infrastructure
Engineers and Technicians
Logistics Support

L★ Construction
Funding Proposal Under Discussion

Subdetector	USA (M$)	USSR	Europe + Asia
Magnet (Warm Coil)	68.3	★	-
Muon Detector	110.0	-	★
Hadron Calorimeter (Silicon)	50.8	★	-
E-M Calorimeter (BaF_2)	2.0	★	★
Central Tracker	40.0	★	★
Forward Calorimeter System	2.0	★	★
EDIA (10%)	27.3	★	★
TOTAL	300.4	★	★

L* Costs

To account the non-US support appropriately in a cost estimate mutual agreements are needed on:

1. labor costs
(normally not accounted for outside USA)

2. costs of social security charges
(normally not accounted for outside USA)

3. currency exchange rates
(Rb/$ - 1.6 or 0.6 ?)

4. existing workshops
(manpower & equipment usually not accounted for outside USA)

5. overhead charges
(normally not accounted for outside USA)

Infrastructure Support in Manyears
Construction of L3 Experiment

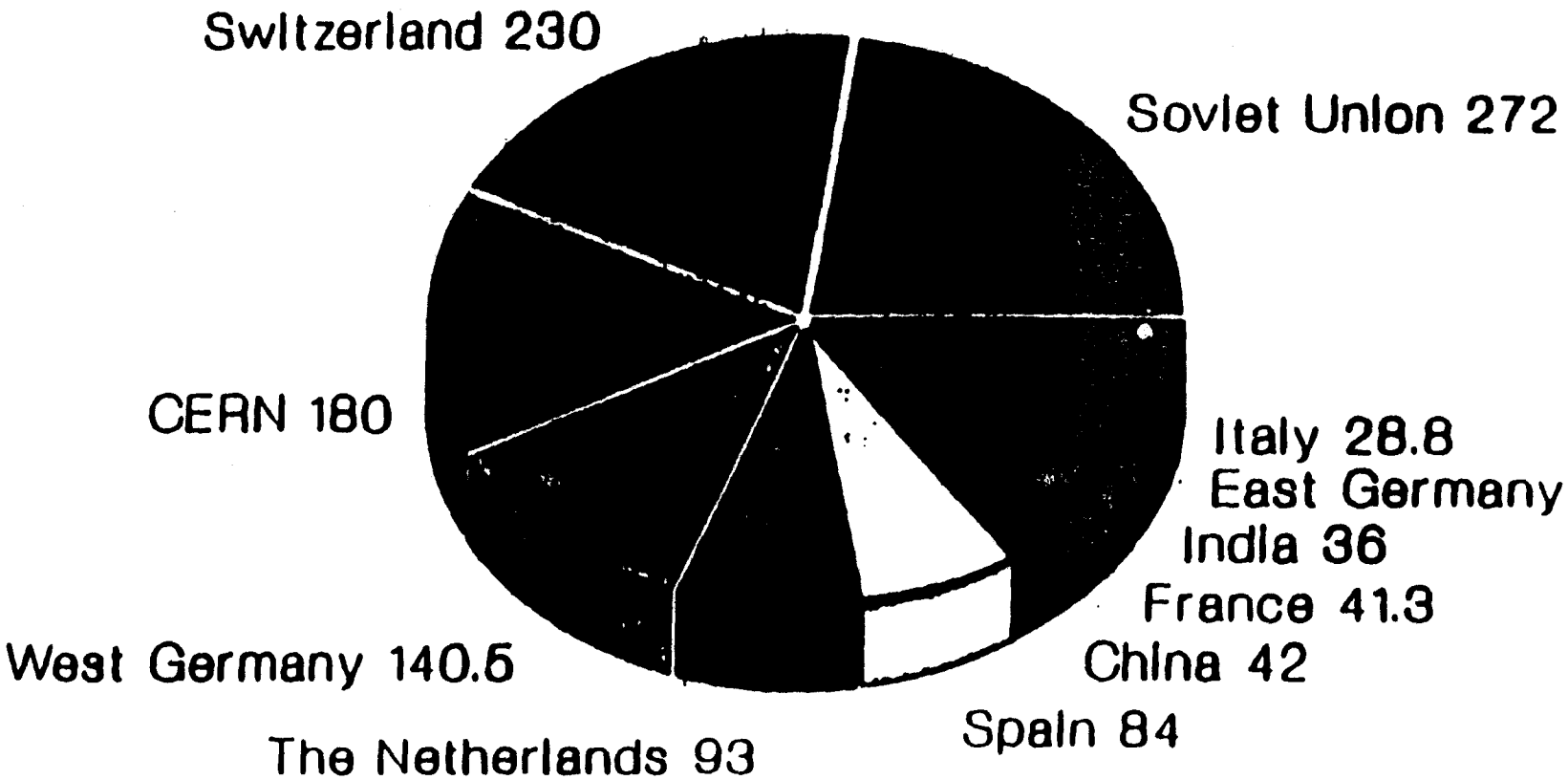

Total Support 1181.1 Manyears

L3 Money Matrix does not reflect the total contributions of the different funding agencies.

USA: Equipment and Salaries in Money Matrix

USSR: Raw Material delivered and converted into Swiss Francs for Money Matrix. Manpower and Infrastructure not included.

Others: Only Equipment included in Money Matrix. Manpower and Infrastructure not included.

L* Strategy:

No financial commitments.

Partners construct and deliver detector subsystems.

Cost and Funds - L3 Detector
Extracted from Money Matrix - Version 14 (kSF)

Subject	Cost	Funds				
		USA	USSR	CH	Others	Total
TEC	10286	-	-	6577	3709	10286
BGO Barrel	35531	20567	5605	2171	7174	35517
Had. Cal.	28465	5037	10350	4366	8712	28465
Muon Det.	41131	23908	-	1220	16014	41142
Magnet	40020	15388	7400	11000	6250	40038
Trigger	9801	4608	500	900	3793	9801
Computer	8817	8817	-	-	-	8817
Luml. Mon.	2022	1928	-	-	-	1928
Scint. Ctrs.	425	125	-	-	300	425
Para. & Assm.	1096	786	-	-	-	786
TOTAL	177594	81164	23855	26234	45952	177205

L*
Finances

Network Lines Serving L3

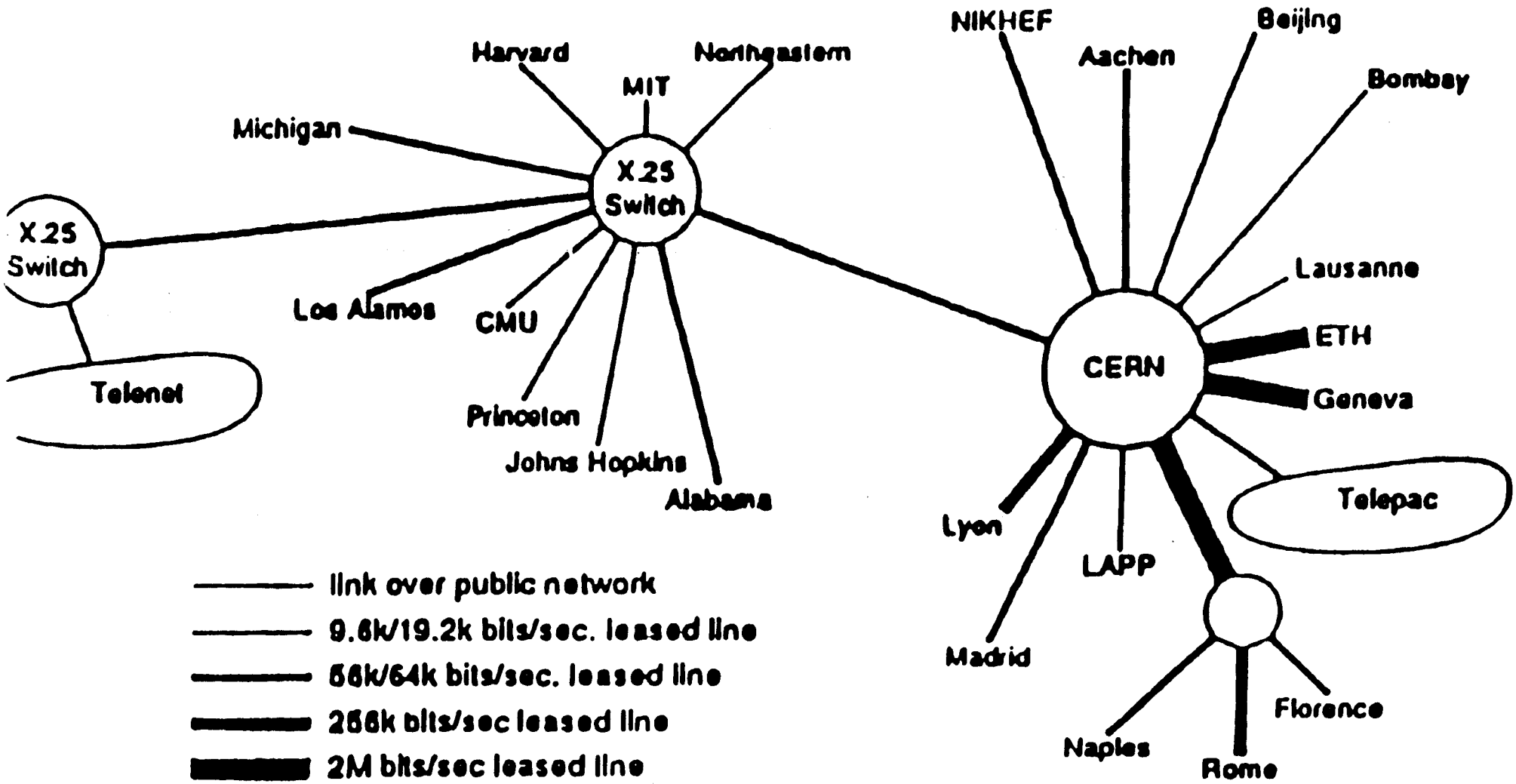

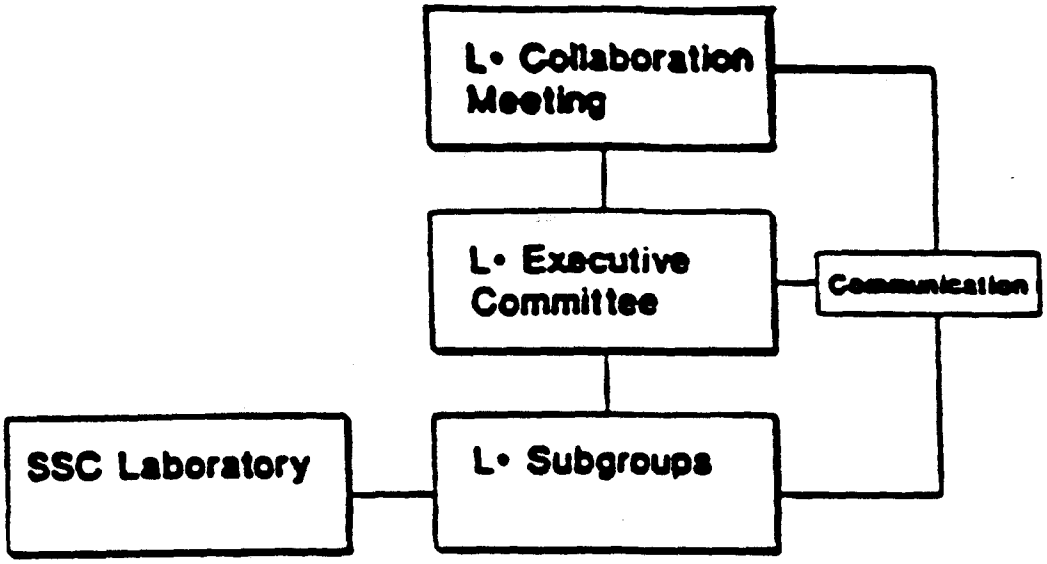

Partial List of Members - L• Executive Committee

Nations	Members
United States	U.Becker, J.Branson, W.Bugg, D.DiBitonto, A.Engler, O.Fackler, R.Heinz, H.Newman, A.Pevsner, P.Piroue, F.Plasil, J.Reidy, J.Rohlf, G.Sanders and others
Soviet Union	Y.Galaktionov, A.Lebedev, I.Savin, N.Tchernoplekov and others
Europe	B.Borgia, M.Bourquin, K.Lübelsmeyer, P.G.Rancoita, C.Sciacca and others
Asia	S.X.Fang, Z.W.Yin, A.Gurtu, Y.Y.Lee, D.Son and others

L• Executive Committee Meetings
open to all members of the Collaboration

True Potential of SSC:

To Explore the Unknown

Physics changes quickly

In 10 years, the examples presented here will most likely no longer be relevant.

These examples only serve as an illustration of the detector capability to search for new phenomena at the SSC

search for narrow dilepton resonances

very narrow Z' (E_6 inspired)

$\Gamma_{Z'} / M_{Z'} = 0.65\% - 3.8\%$

assume $M_{Z'} = 15$ TeV

with electromagnetic detector
L* can measure the *width*

with muon detector
L* can measure the *forward backward charge assymetry*

Note

the detector is 4 π

this will enable us to

reconstruct the $Z^0 \rightarrow q\bar{q}$ and $W^{\pm} \rightarrow q\bar{q}$

decays with mass resolution of $\approx$ *2 GeV*

We can also reconstruct the

$W^{\pm} \rightarrow \mu\nu$ *decay by measuring*

the missing energy to locate

the neutrino P_T

(2) <u>Clean identification of</u> :

$$Z \to l^+ l^-$$

requiring $\Delta M \approx \Gamma$

$$pp \to Z_o Z_o + x$$

$$\hookrightarrow \mu\mu \quad \hookrightarrow \text{jet+jet}$$

$$M_{(Z_o Z_o)} \approx 2 \text{ TeV}$$

$$P_{(Z_o)} \approx 1 \text{ TeV} \qquad P_\mu \approx 0.5 \text{ TeV}$$

$$L^* : \Delta P/P \approx 2.4\% \quad \Delta M = \Gamma_Z$$

(3) <u>Clean identification of</u> :

$$Z,W \to (Q,\bar{Q}) \to 2 \text{ jets}$$

use complete sampling calorimeter
(replace BaF_2)

we have: $\Delta E/E = (50/E + 1.0)\%$

$$\Delta M = \Gamma_{W,Z} \approx 2.5 \text{ GeV}$$

(1) *Speed of the Detector*

Yields of (1) - (3) are small
Runs at $10^{34} cm^{-2} sec^{-1}$

<u>Central Tracker</u> : *use only scintillating fibers*
with $t = 5ns$ $\Delta Z = 1cm$

<u>Calorimeter</u> : 10-15ns

Measuring jets and leptons

<u>Muon Chambers</u> : $\Theta > 7.5^0$

If Mass of $H^0 > 1$ TeV
or There is No Higgs

Then :

$$pp \longrightarrow Z^0 Z^0 \qquad (1)$$

$$pp \longrightarrow W^{\pm} Z^0 \qquad (2)$$

$$pp \longrightarrow W^{+} W^{-} \qquad (3)$$

will increase with

$$M_{Z^0Z^0} \quad M_{W^{\pm}W^{\pm}} \quad M_{Z^0W^{\pm}}$$

and the longitudinal polarization will increase with M

At $M > 1$ TeV,
calculations of both signal and background
may be even less reliable.
Nevertheless following properties
of $L^{\star}$
are important
for the success of this type of experiment

If the background (pile up, etc)
10 times worse
we cut

$$\sum P_T < (P_T^{\mu}/10 + 50) \text{ GeV}$$

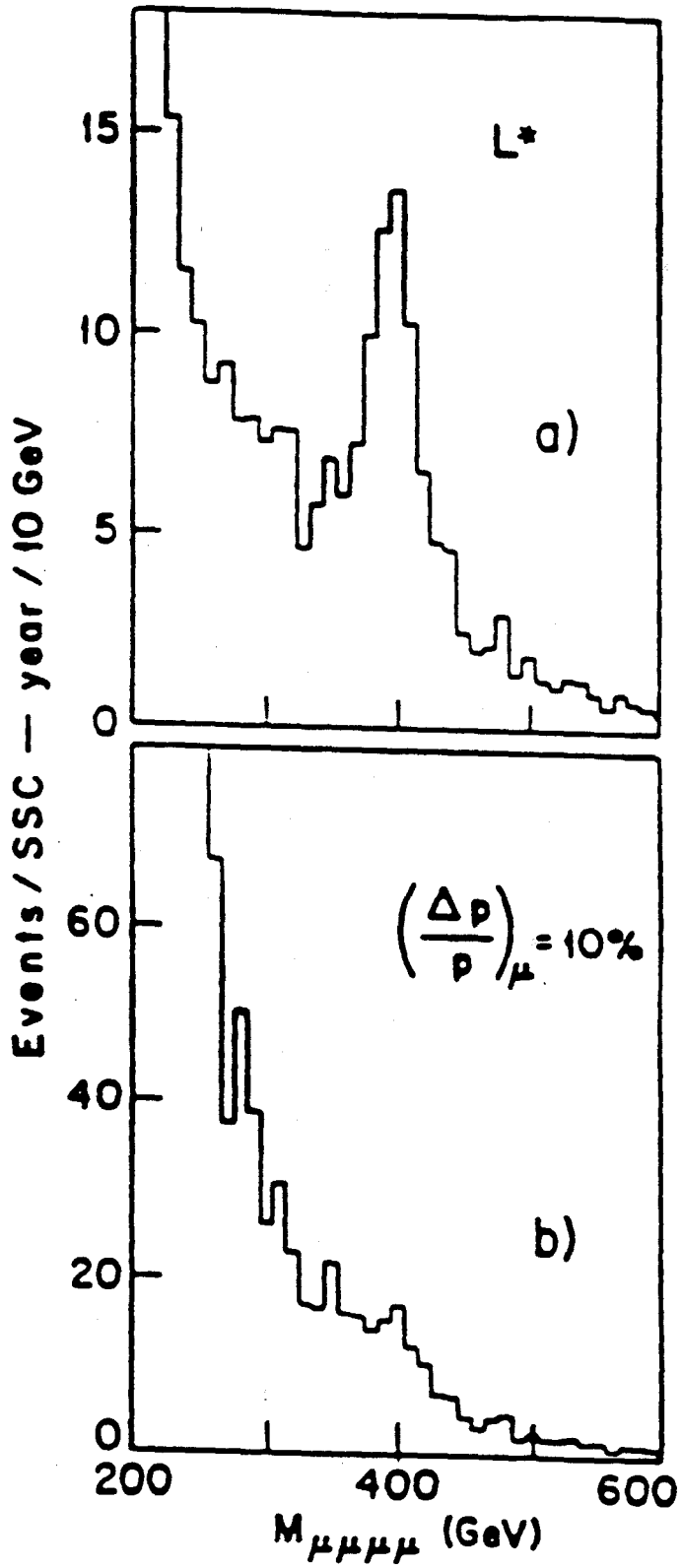

Remarks

We have selected the $H_0 \rightarrow 4\,\mu$ *from the R cut requiring*

$$\sum P_T < \left(\frac{P^{\mu}{}_T}{10} + 5 \right) \text{ GeV}$$

We Assume :

the following backgrounds in the R cone must be small

(1) Hadron spray from beam gas

(2) Muon spray from upstream of the intersection region

(3) Pile-up of events

Example: $M_H = 400$ GeV

$$H^0 \to Z^0 Z^0 \to \mu^+\mu^- \ \mu^+\mu^-$$

Background:

$$pp \to q\bar{q} + X \to 4\mu + X$$
$$pp \to Z^0 Z^0 + X \to 4\mu + X$$
$$pp \to Z^0 + X \to 4\mu + X$$

Using the above cuts:

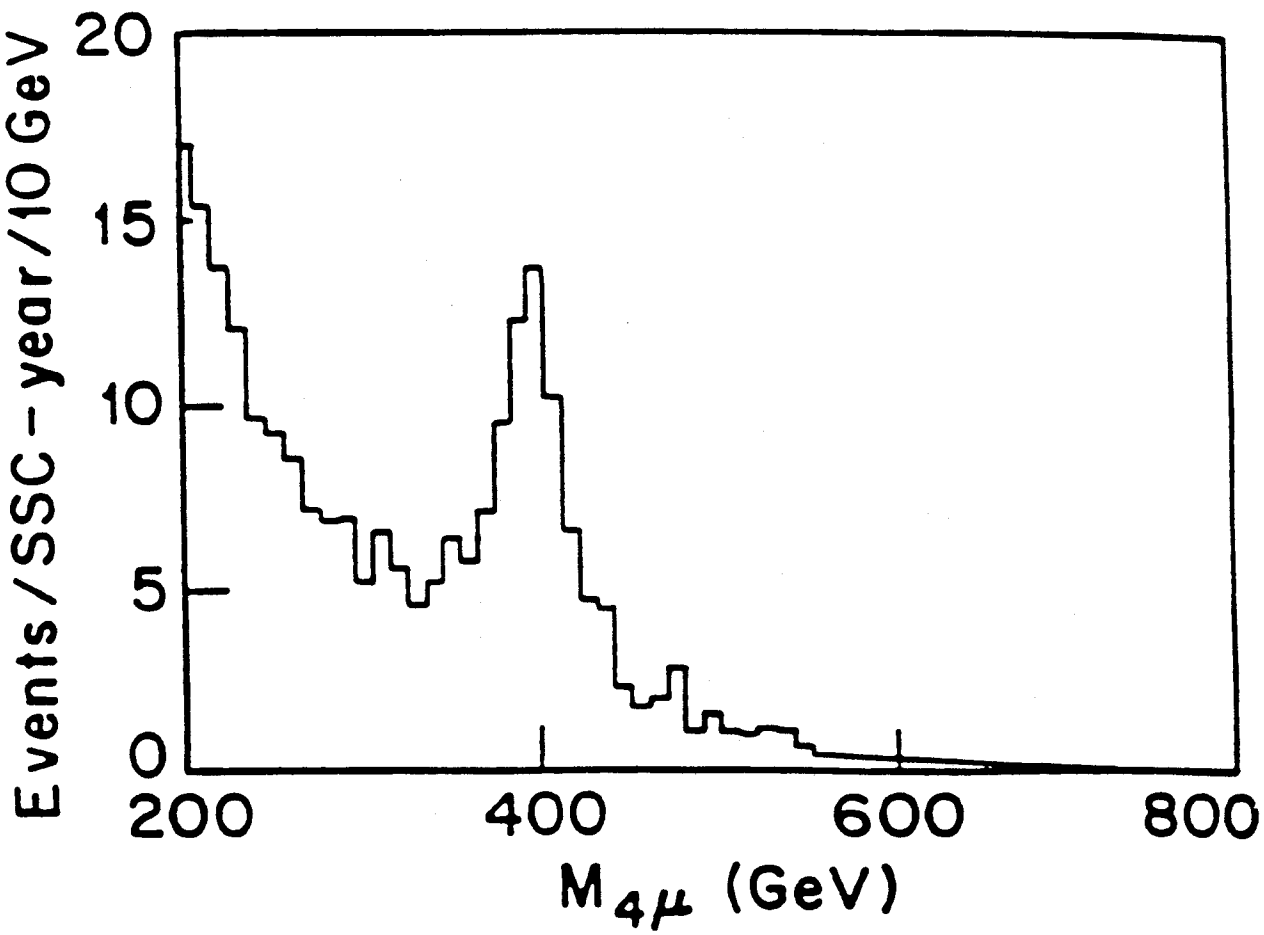

Electron Backgrounds

In addition to Muon Background

1. π^0
2. *Charge exchange*

A) *Momentum Energy Matching measuring momentum in Central Tracker P and energy in* BaF_2*: E*

P = E Rejection factor : 100

B) *Isolation cut :* Rejection factor : 20

Rejection of μ backgrounds.

1. $P_{\perp} > 5$ GeV

2. $P_{\mu} = P_{vertex}\ 2\sigma$ *Rejection : 20*

3. *Vertex matching :* *Rejection : 3*

4. *Isolation cut :* *Rejection : 20*

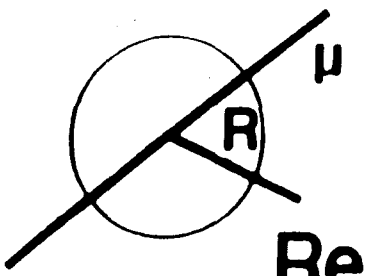

Require $\Sigma P_T < (5 + P_T(\mu)/10)$ GeV

$$p + p \rightarrow H^0 + X$$
$$\quad\quad\quad

$140 < M_H < 180\ GeV$

$$p + p \rightarrow H^0 + X \rightarrow Z_0 Z_0^* \rightarrow 4\,\text{leptons}$$

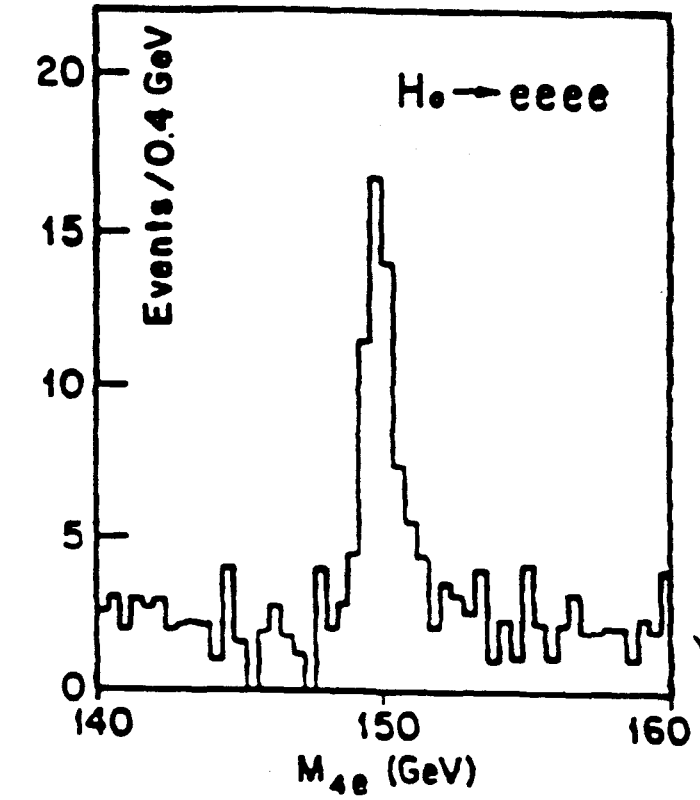

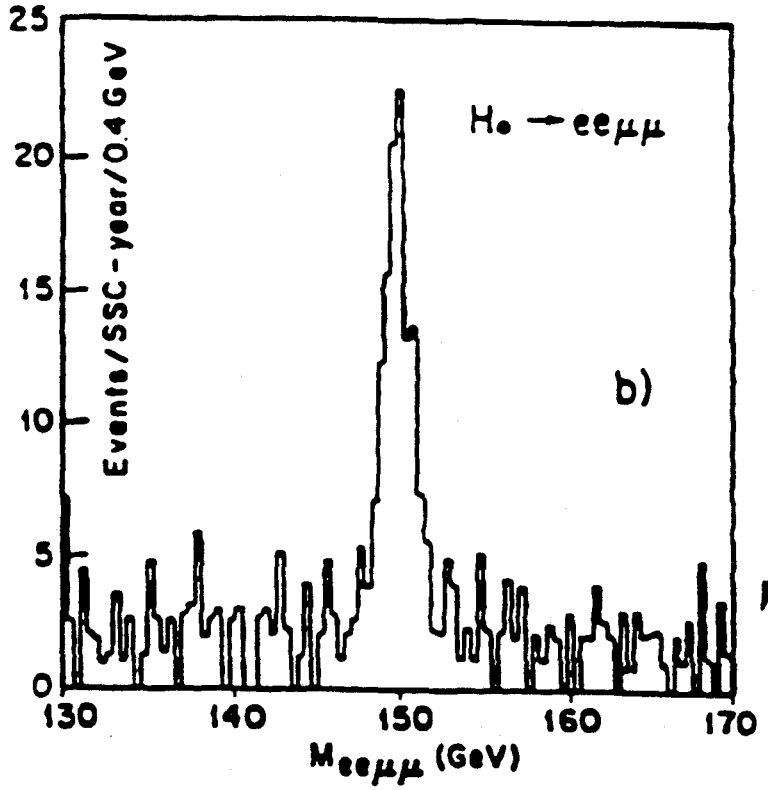

background includes $Z\,t\bar{t} \rightarrow 4l$

if $\Sigma_T < \left(\frac{E_T^{\gamma}}{10} + 15\right)$ GeV

Then the 100 GeV $H_0 \rightarrow \gamma\gamma$

signal/background ratio

will be 4.1σ

$$\sum E_T < \left(\frac{E_T^{\gamma}}{10} + 10\right) \text{GeV}$$

Then the 100 GeV $H_0 \rightarrow \gamma\gamma$

signal/background ratio

will change from 9σ *to* 6σ

Remarks

Assume there are
more backgrounds and pile-up

so the energy is much larger
in the $R < 0.6$ cone

and we must cut
at much higher energy

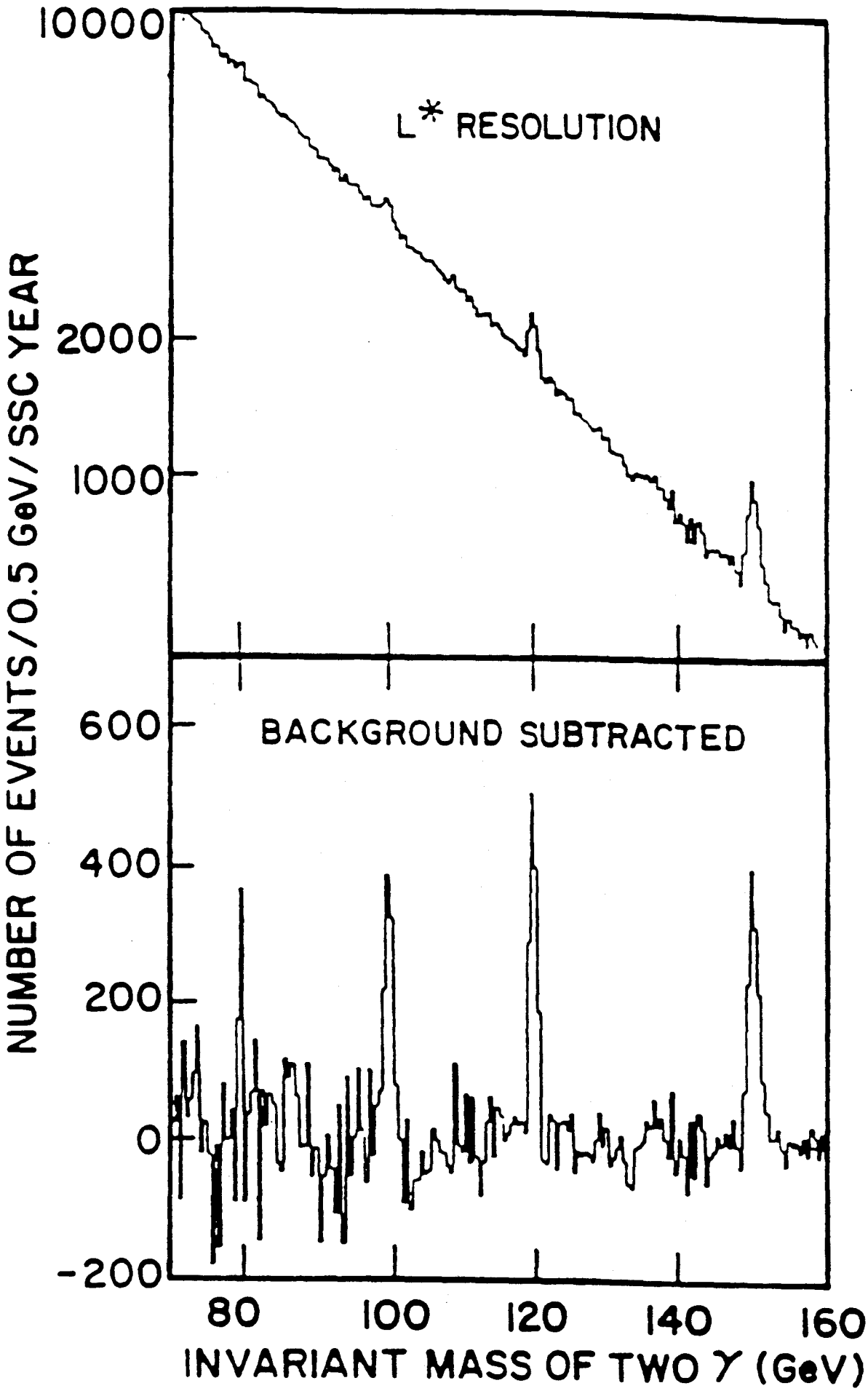
10000
2000
1000
L* RESOLUTION
600
400
200
0
-200
BACKGROUND SUBTRACTED
NUMBER OF EVENTS/0.5 GeV/SSC YEAR
80
100
120
140
160
INVARIANT MASS OF TWO γ (GeV)

Other Photon Backgrounds

- π^0 and γ production inside jets.

  $\sigma(pp \rightarrow jet\ jet) = 1.2mb$

  for $p_\perp(jet) > 20\ GeV$ and $|\eta| < 2.5$

- one isolated photon + jet
  - $\sigma(qg \rightarrow q\gamma) = 119$ nb
  - $\sigma(q\bar{q} \rightarrow g\gamma) = 6$ nb

Isolation Cut:

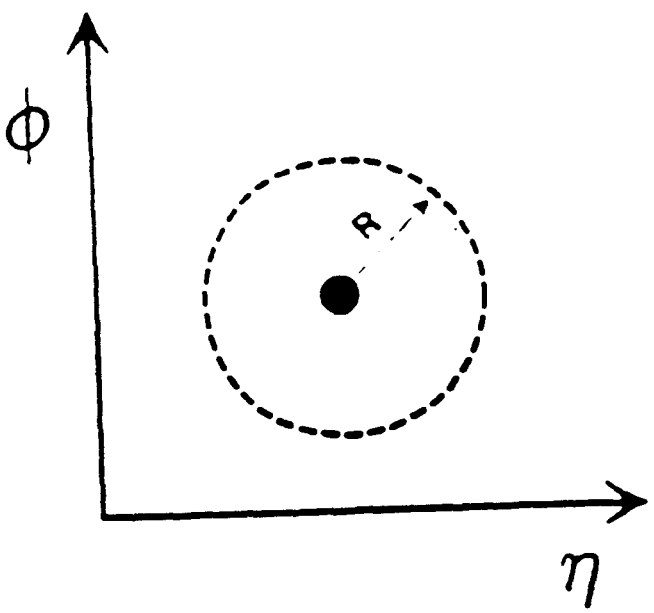

$$R = \sqrt{(\Delta\eta)^2 + (\Delta\phi)^2}$$

Requirement: $\Sigma E_T < E_T^\gamma/10 + 5\text{GeV}$

Background reduction: 10^4 (using R=0.6)

Isolated Photon Background:

$gg \to \gamma\gamma$ (493 pb)

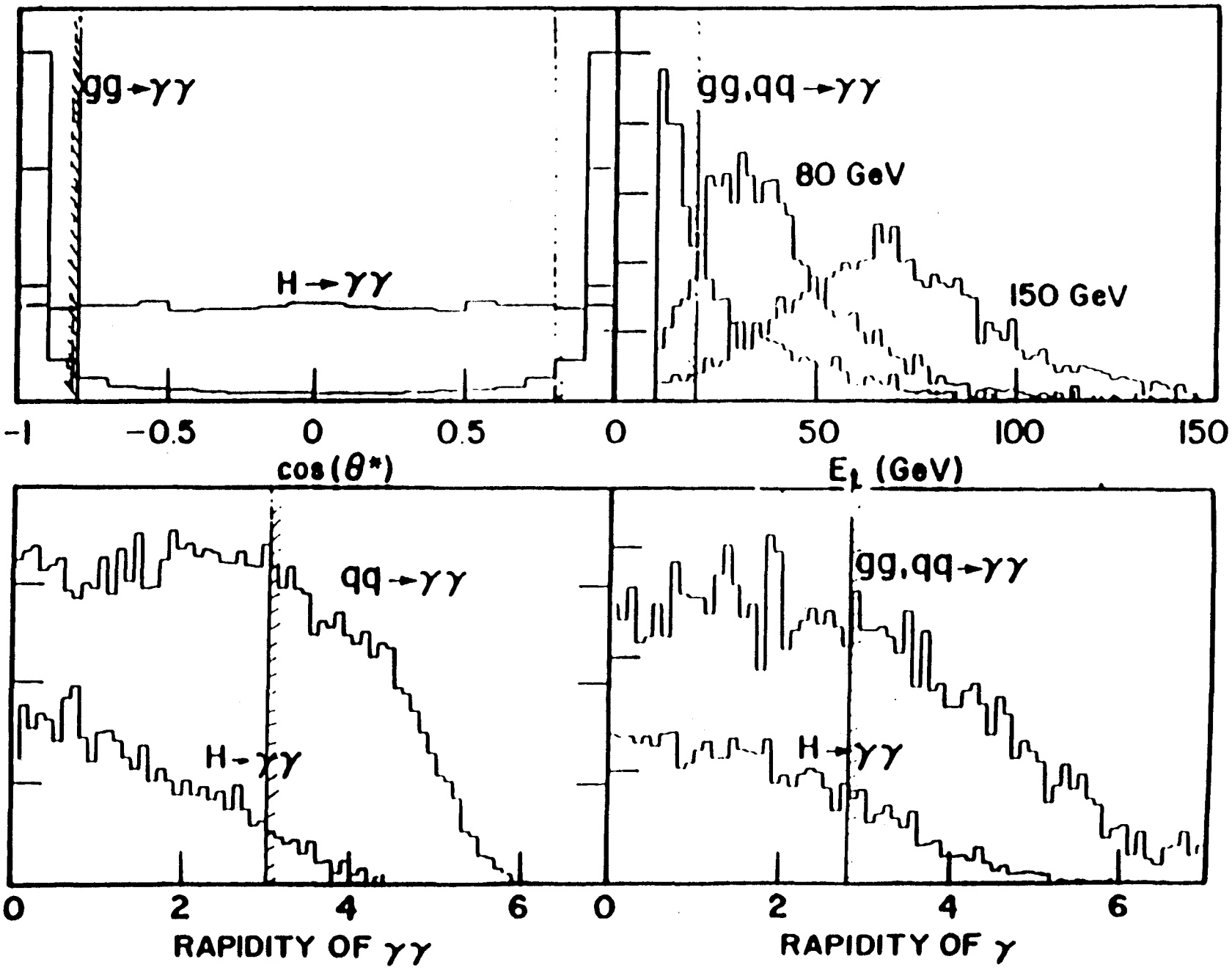

80 GeV < M_H < 160 GeV

$H^0 \to \gamma\gamma$

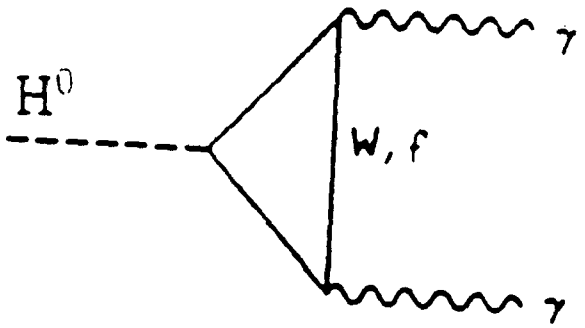

$Br(H^0 \to \gamma\gamma) = 10^{-4} - 10^{-3}$

$\sigma(pp \to H^0 \to \gamma\gamma) = 0.3$ pb

Signature: Two isolated photons

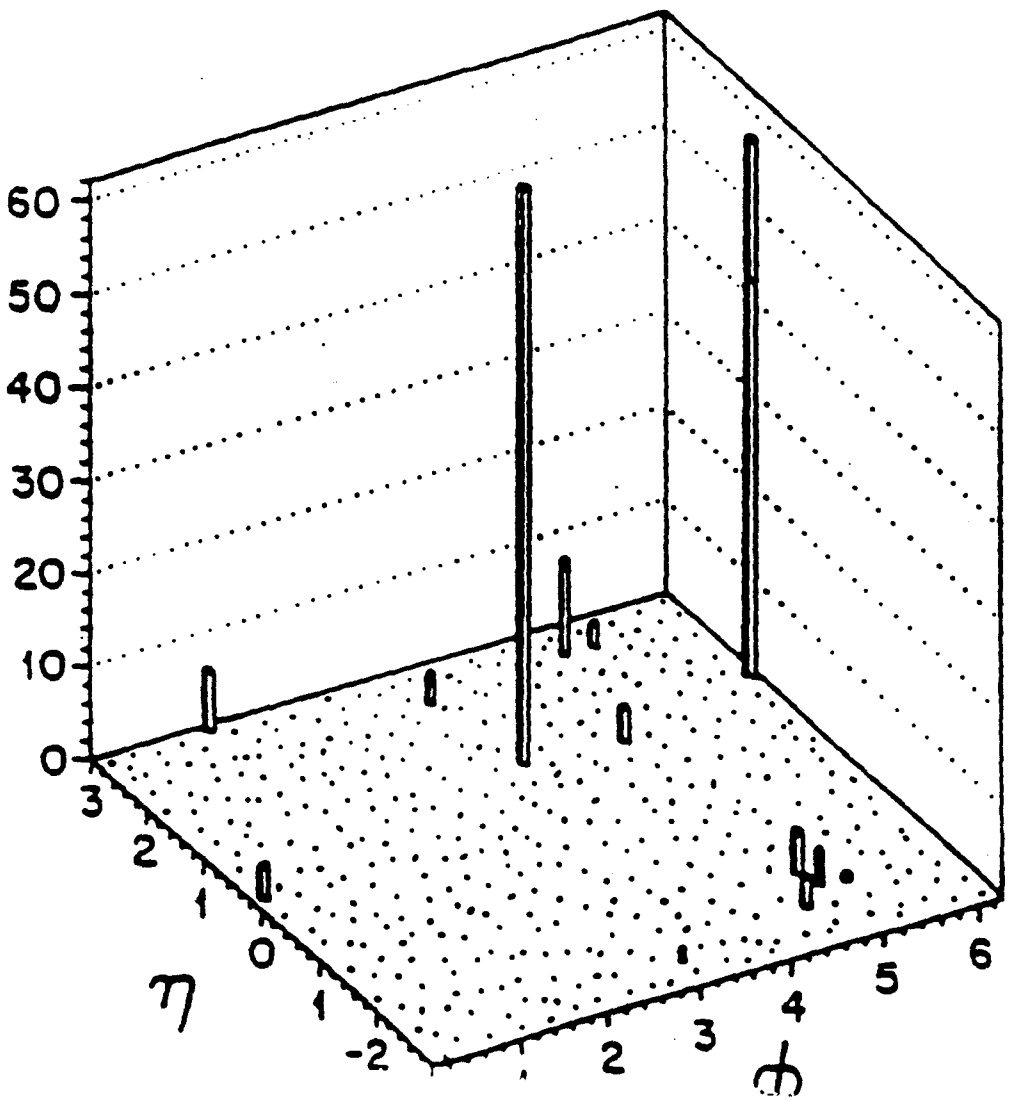

Physics of Precision γ and e

$H^0 \rightarrow \gamma\gamma$ Search

for

$$80 \leq M_H \leq 160 GeV$$

Higgs Mass

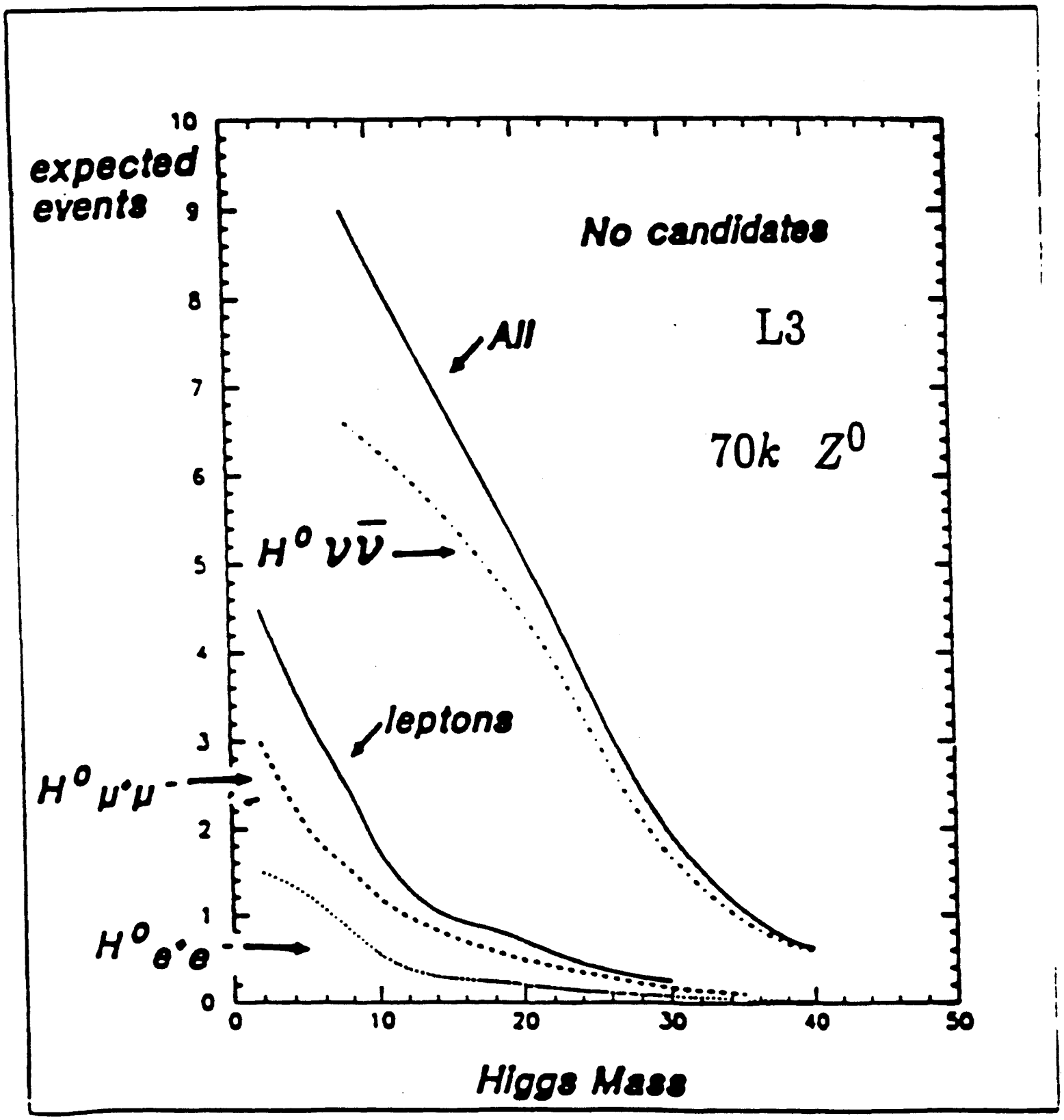
expected events
No candidates
L3
70k Z^0
All
$H^0 \nu\bar{\nu}$
leptons
$H^0 \mu^+\mu^-$
$H^0 e^+e^-$
0
1
2
3
4
5
6
7
8
9
10
0
10
20
30
40
50
Higgs Mass

Search for the Higgs Boson

Energy (GeV)

0 50 90 200 1000

L3 at LEP I

L3 at LEP II

L* at SSC

$e^+e^- \rightarrow l^+ l^- H^0$

$H^0 \rightarrow \gamma\gamma$

$H^0 \rightarrow Z^0 Z^{0*}$

$H^0 \rightarrow$ 4 leptons

$H^0 \rightarrow Z^0 Z^0$

Standard Model

New Physics below M_{Planck}

Minimal SUSY

Non-minimal SUSY

L* Unique features

1. μ : $\frac{\Delta p}{p} = 2.4\%$ $p = .5$ TeV $2^o < \theta < 178^o$

$$P_\mu = P_{\text{central tracker}} + \Delta E$$

2. e. γ. : $\frac{\sigma}{E} = \left(\frac{1.3}{\sqrt{E}} + 0.5\right)\%$: $\Delta\theta = \Delta\varphi = 0.2^o$

Shaping time : 3 ns

$$P_{\text{central tracker}} = E_{BaF_2}$$

3. Jets : Shaping time : 15 ns

$$\frac{\sigma}{E} = \left(\frac{50}{\sqrt{E}} + 1.0\right)\% \text{ or } \frac{\sigma}{E} = \left(\frac{50}{\sqrt{E}} + 4.0\right)\%$$

4. Central tracker : $\frac{\Delta p}{p} = 0.5$ $p = 0.4$ TeV

Shaping time : 10 ns

L★ Assembly

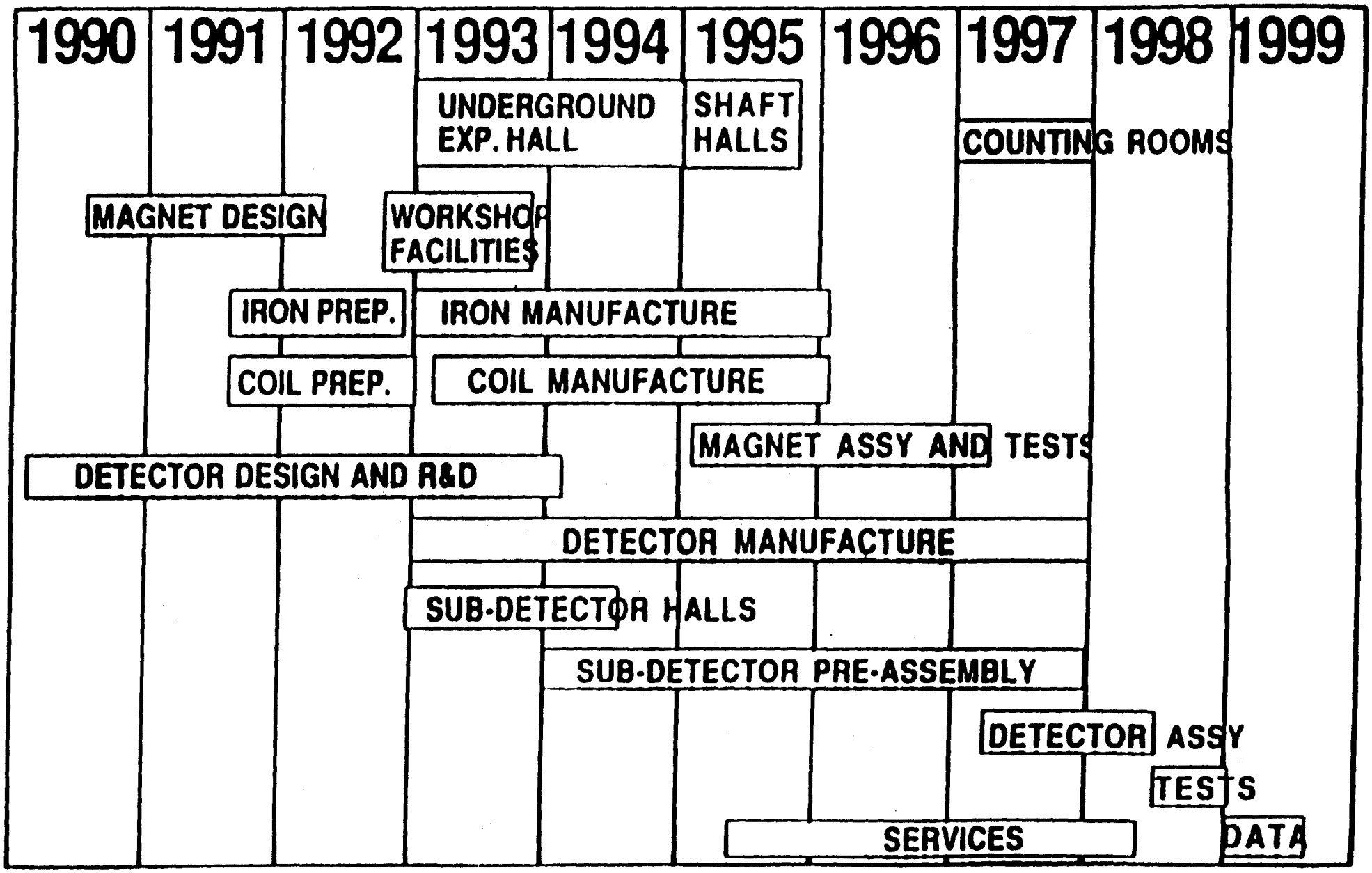
1990
1991
1992
1993
1994
1995
1996
1997
1998
1999
UNDERGROUND EXP. HALL
SHAFT HALLS
COUNTING ROOMS
MAGNET DESIGN
WORKSHOP FACILITIES
IRON PREP.
IRON MANUFACTURE
COIL PREP.
COIL MANUFACTURE
MAGNET ASSY AND TESTS
DETECTOR DESIGN AND R&D
DETECTOR MANUFACTURE
SUB-DETECTOR HALLS
SUB-DETECTOR PRE-ASSEMBLY
DETECTOR ASSY
TESTS
SERVICES
DATA

L* Installation Sequence

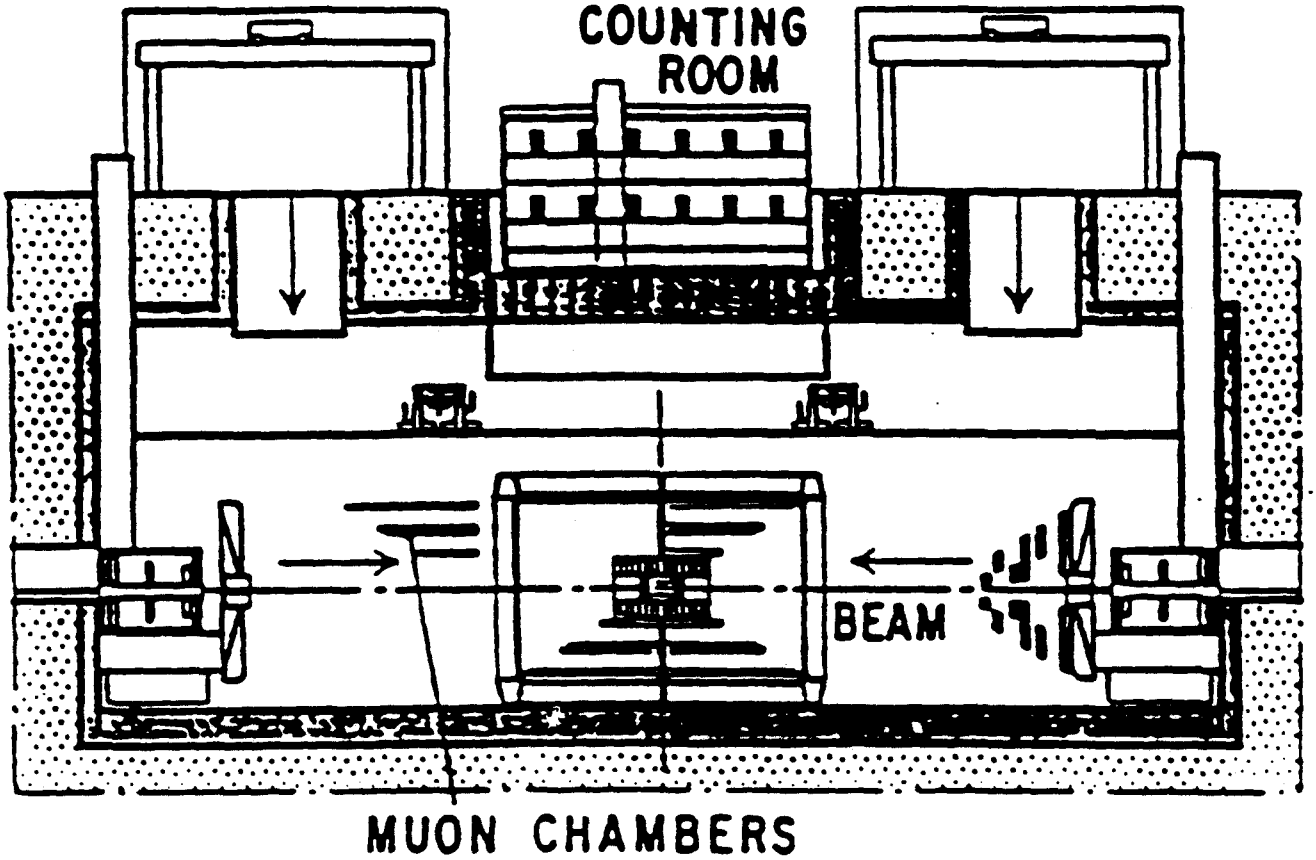

Step 5: Muon Detector installed.

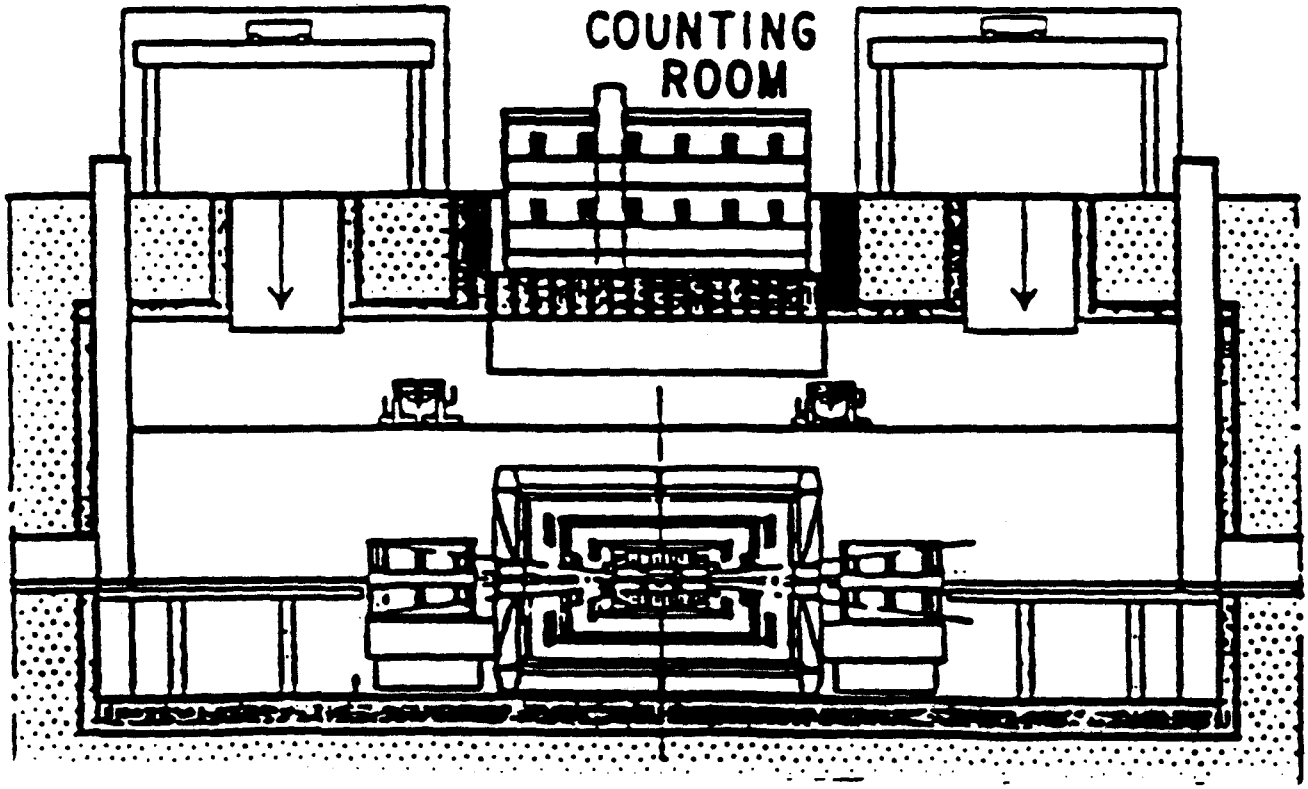

L* Installation Sequence

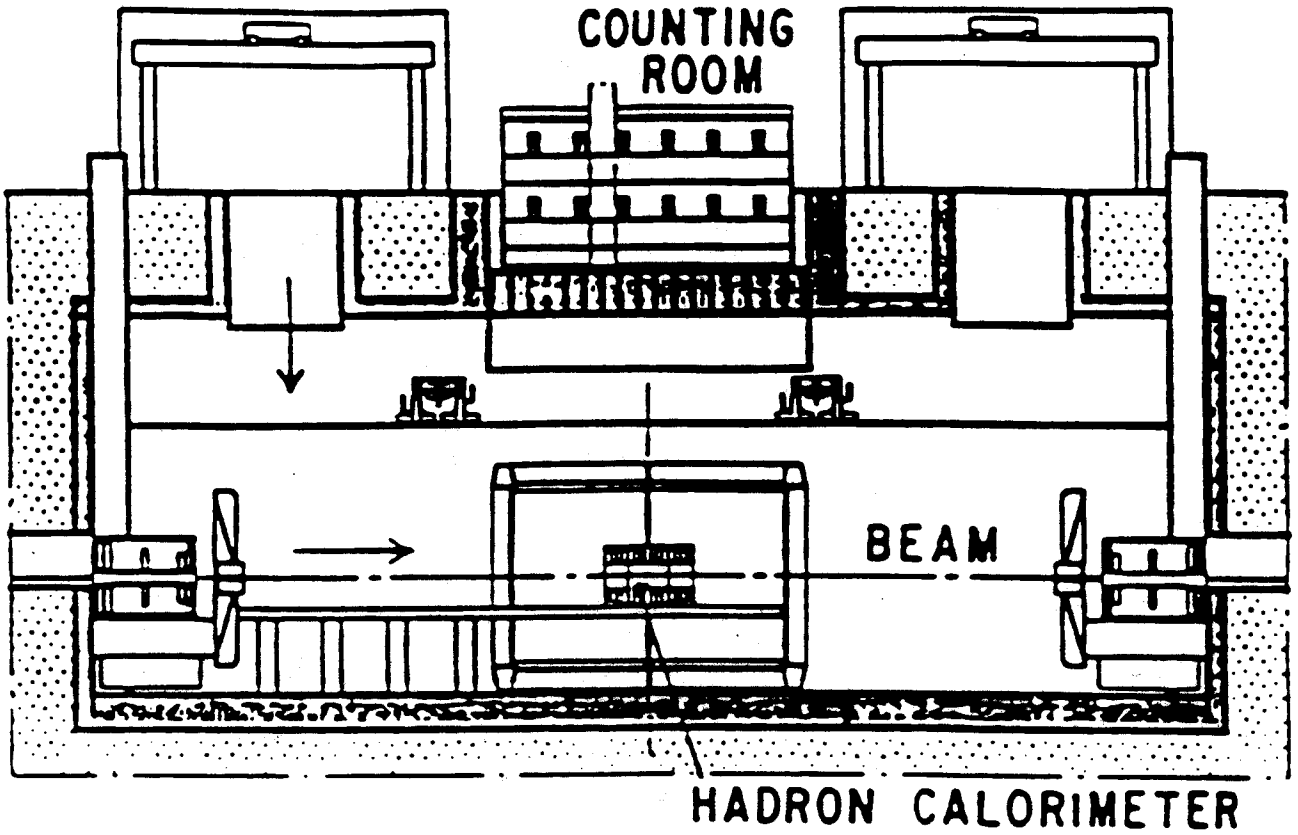

Step 3: Hadron Calorimeter installed.

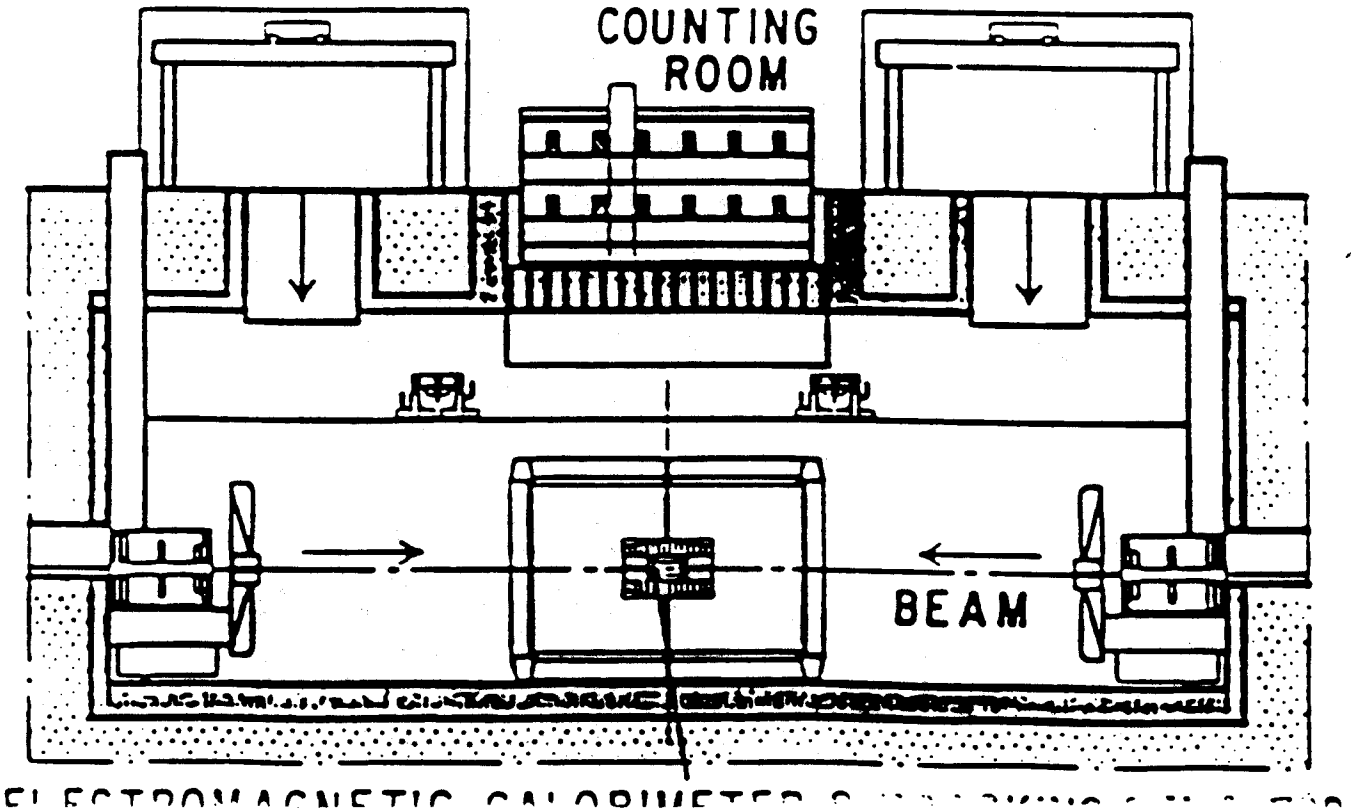

L* Installation Sequence

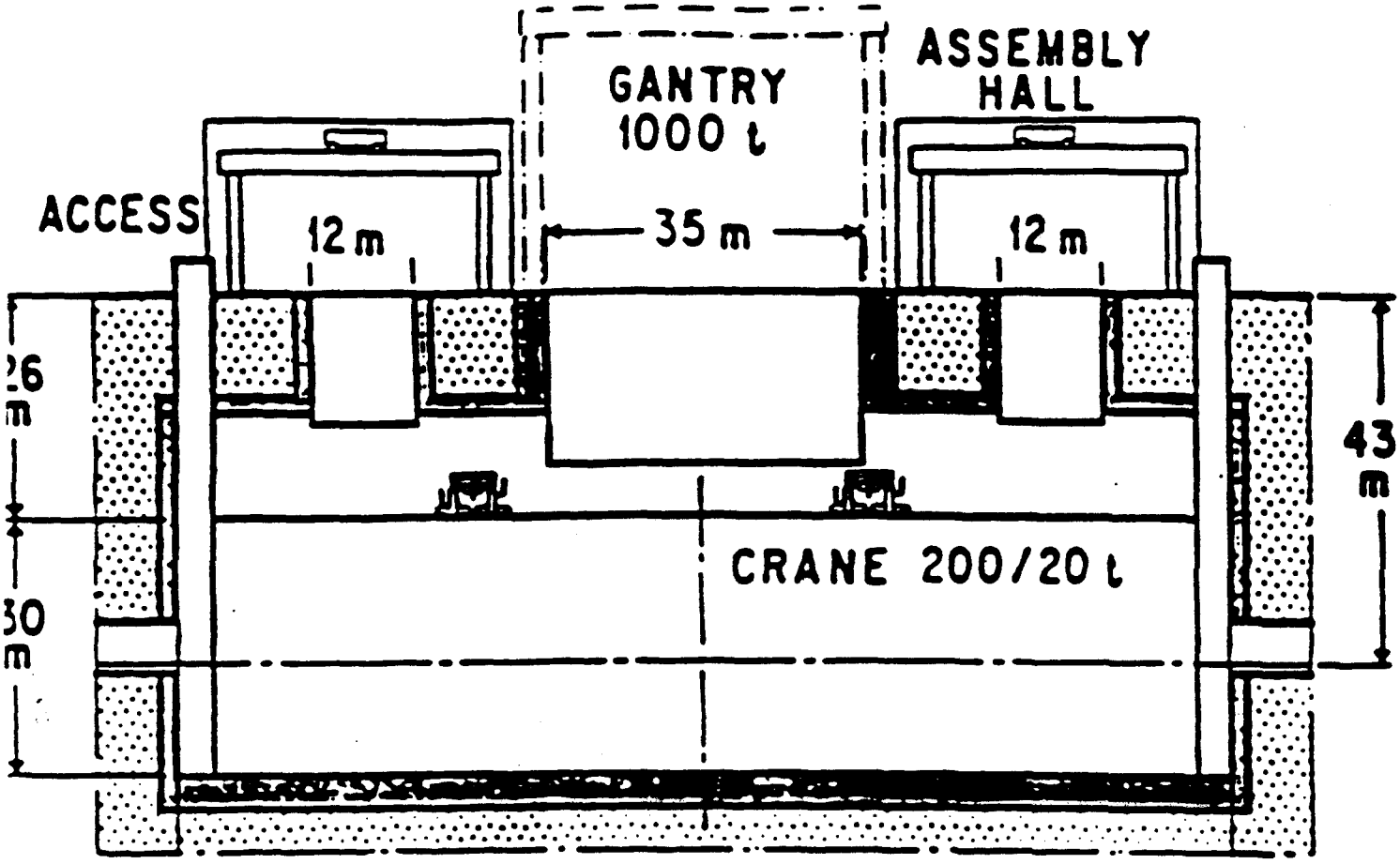

Step 1: Hall ready.

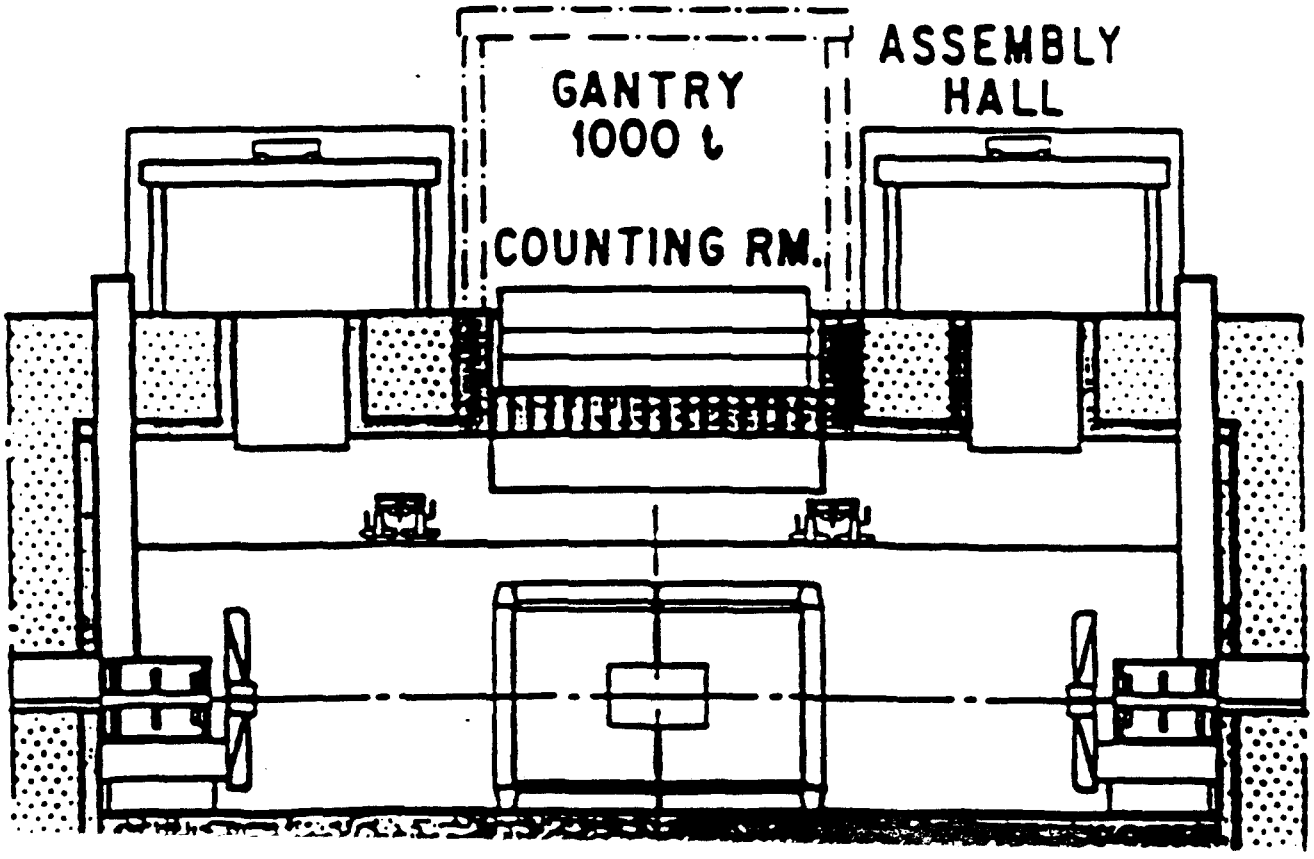

L*
Assembly

Technology and R/D for Data Digitizer

Muon Ch. Straw Tube	1 ns Shift Register ⇨ Hit Encoder Fiber Optics for Signal Transmission
BaF_2 Hadron Cal.	Analog or Digital Pipelined ADC

<u>Analog Pipeline</u>

- Switched Capacitor Array
- CCD

⇨ Slow ADC

<u>Digital Pipeline</u>

- Flash ADC
- Sigma Delta ADC

⇨ Fast Memory

22 bit Dynamic Range of BaF_2 requires R/D.

For $L^\star$ We Need
Additional Techonologies

- *Very Fast front end Buffering*

  L3 : 500 μs *$L^\star$: 16 ns*

- *Fast Pipelined Level-1 Trigger*

  3 : 22 μs *$L^\star$: 16 ns*

- *Fast Event Builder*

  L3 : 16 Mb/s *$L^\star$: 1 Gb/s*

Requirement of Electronics

Subdetector	Signal	Resolution	Dynamic Range	Electronics	Channels
μ chambers	Timing	<1ns	1μs	Discrim. TDC	250,000
BaF_2 Calorimeter	Ampli.	0.1%	22bits	ADC	26,000
Hadron Cal. Si Pad	Ampli.	<1%	12bits	ADC	180,000
Straw tubes	Timing	<1ns	0.1μs	Discrim. TDC	75,000
Si microvertex	Hit	16ns		Special	76,000
Scintillating fiber	Hit	5ns		MCP tube Discrim.	50,000
Resistive Plate Counter	Hit	16ns		Discrim. TDC	20,000
			Total Readout Ch.	≈	700 k

L3 Trigger and Online System

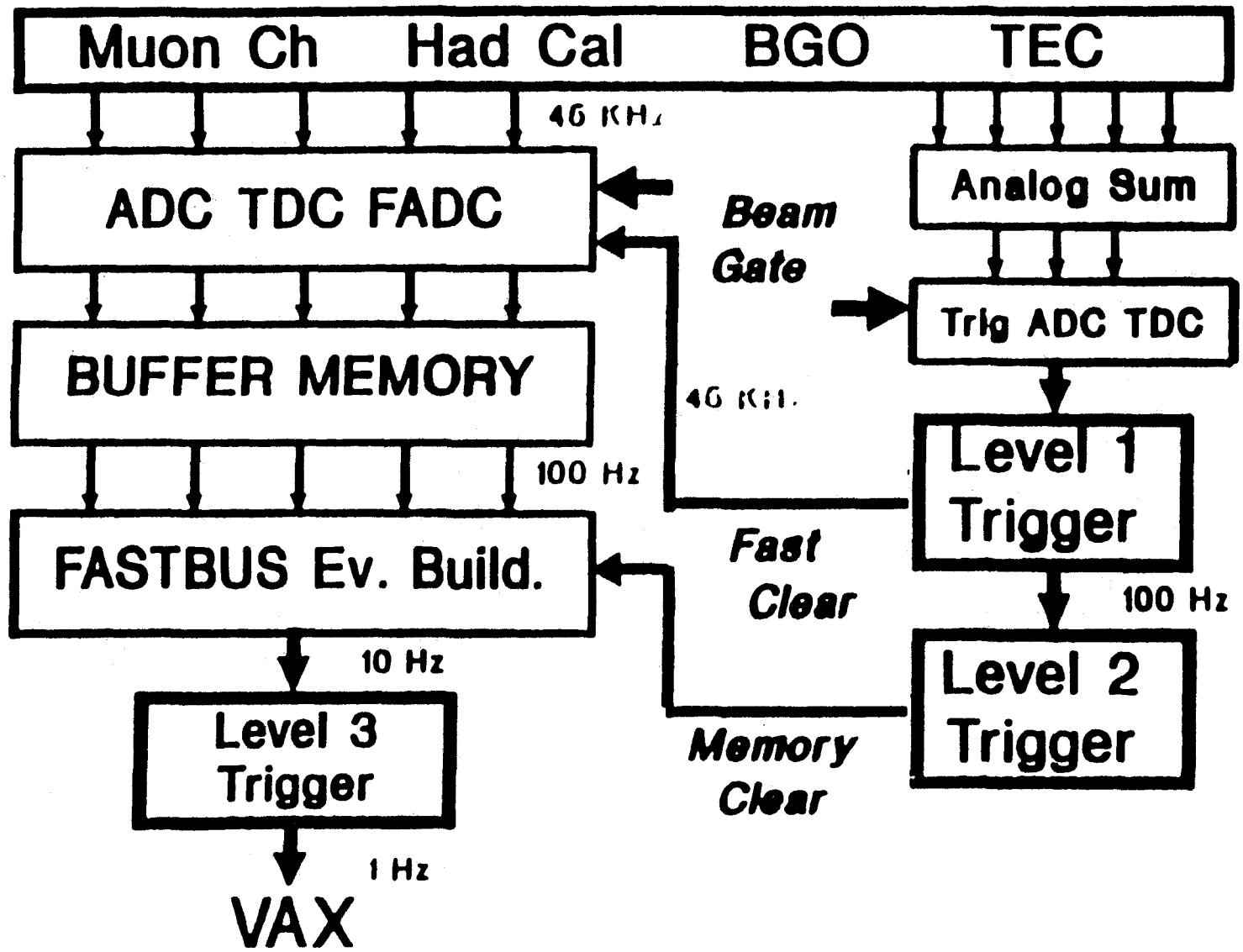

Trigger and Data Acquisition

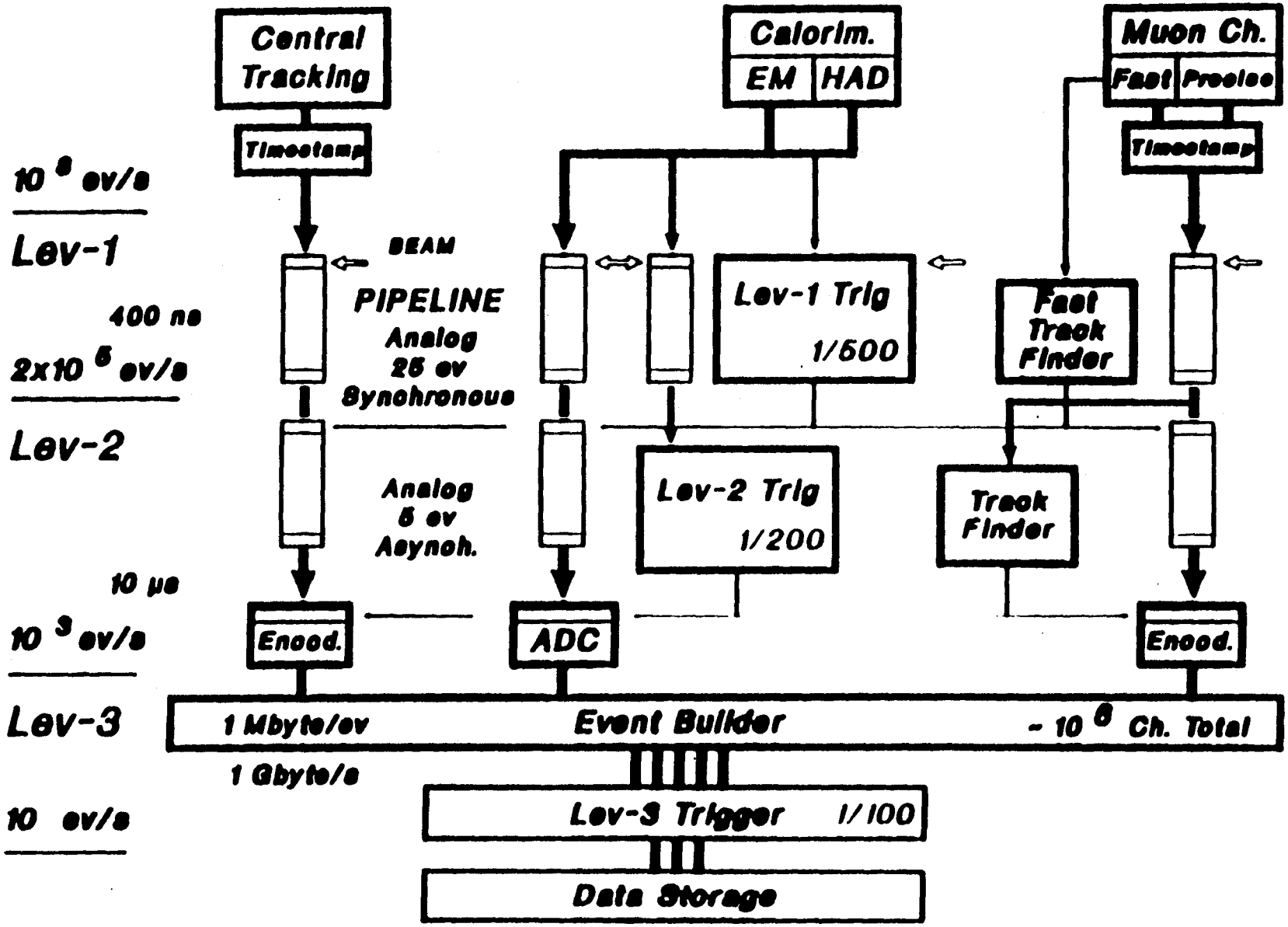

WORK FOR L★ CENTRAL TRACKER CONSTRUCTION AND INSTALLATION

All construction of the system is anticipated at Los Alamos. Collaborating universities will work on the components as follows :

1. Structure fabrication	Los Alamos
2. Silicon detectors and electronics	Los Alamos
3. Straw tubes, electronics	Boston Univ., Moscow
4. Scintillating fiber readout	Los Alamos, Hamamatsu
5. Simulations	Los Alamos, Boston Indiana, and others
6. Data acquisition system	Los Alamos, Boston, Indiana, New Mexico

Milestones for the L* Central Detector R&D Program

	FY 1991	FY 1992	FY 1993
Si Detectors	• Evaluate detectors	• Select strip length • Test at 10^{14} neutrons/cm^2	• Select final detector characteristics
Si Electronics	• Evaluate front end	• Test prototype front-end and optical link	• Finalize front-end and optical link
Si Structure	• Evaluate materials	• Stability and cooling test of full-scale prototype assemblies	• Finalize manufacturing plan
Straw Detectors	• Select gas • Measure drift velocity and Lorentz angle in 0.75-T field	• Complete tests at 10^{14} neutrons/cm^2 and 1 Coulomb/cm • Finalize design of 3-m-long straws	• Finalize manufacturing plan
Straw Electronics	• Evaluate front end	• Select front-end amplifiers	• Select optical link
Straw Structures	• Evaluate materials	• Complete stability and mechanical design	• Finalize manufacturing plan
Scint. Fiber Detectors	• Evaluate fibers	• Select fibers • Test at 10^{14} neutrons/cm^2	
Scint. Fiber Readout	• 3-D model of photo tube	• Prototype and test compact tube	• Test production tube
Scint. Fiber Structures		• Stability and mechanical tests	• Finalize manufacturing plan
Radiation Damage	• Prototype structure materials	• Complete tests on structural materials and detectors	
Simulations	• Complete code revision for neutron simulation	• Complete high-luminosity (10^{34}) design option	
System Integration	• Complete conceptual design of mounting, cabling, and	• Finalize mounting and alignment	• Finalize installation plan

ISAJET Monte Carlo study sample :

10 events overlap

(9 mini-bias events + 1 higgs event (m_H= 800 GeV))

$$\langle N_{ch} \rangle \sim 260,$$

$$\text{for } \theta_{particle} > 16^{o}$$

Efficiency of reconstruct vertex of 4 leptons ~100 %,

(Track find efficiency >90%)

Standard diviation of reconstruct event Z-coordinate,

$$\sigma_z = 0.85 \text{ cm}$$

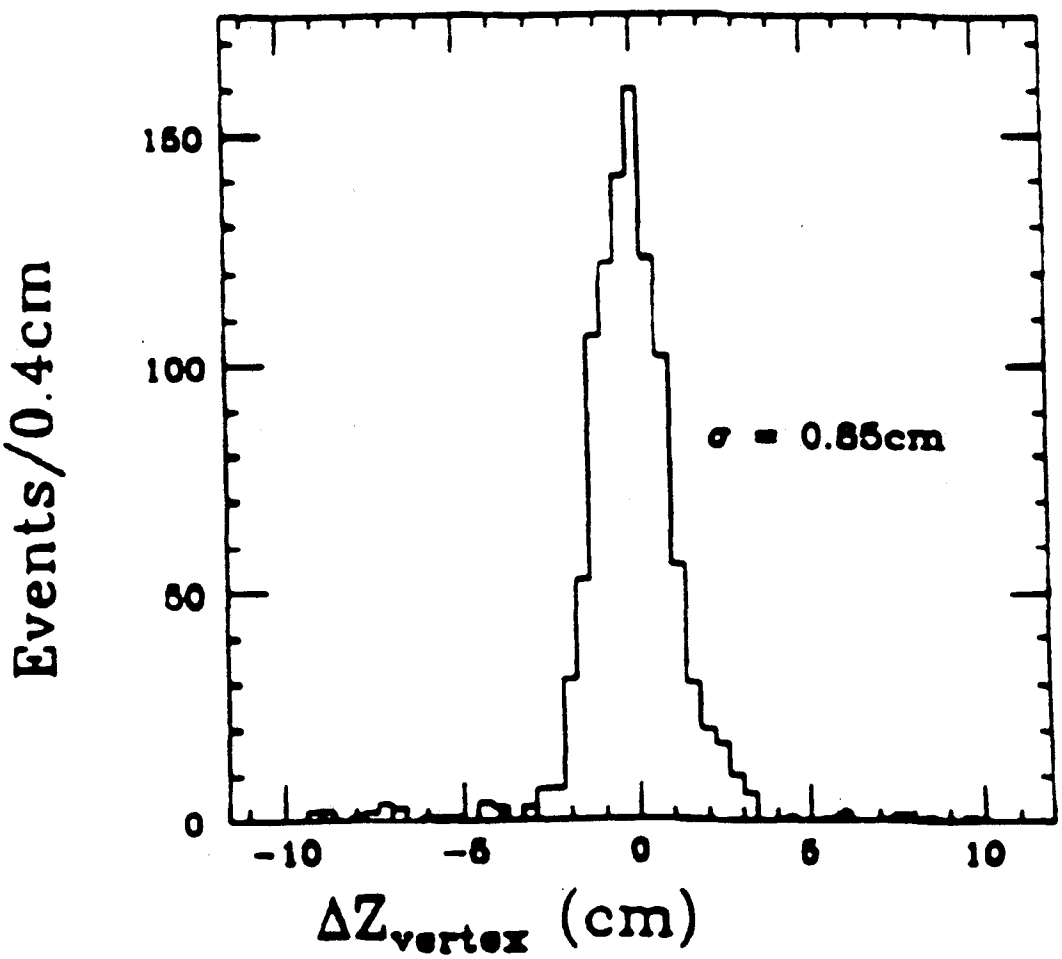

Straw Tubes

80 layers ***optically aligned within 25μ to silicon tracker***

Much work done at Boston University

➡ **3mm Diameter driftime ~ 15 ns**

$\sigma \approx 69\mu$

Tests : 4×10^{14} n/cm^2 ***(fission spectrum)***

➡ ***Performance stable***

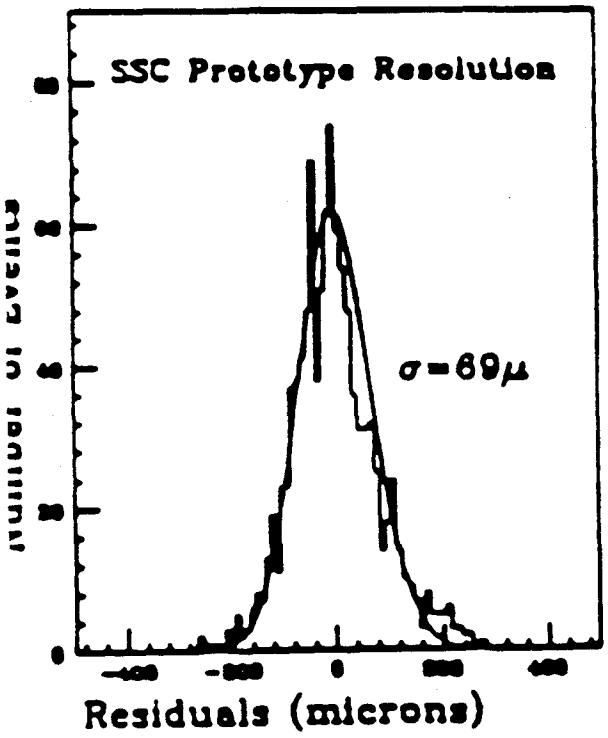

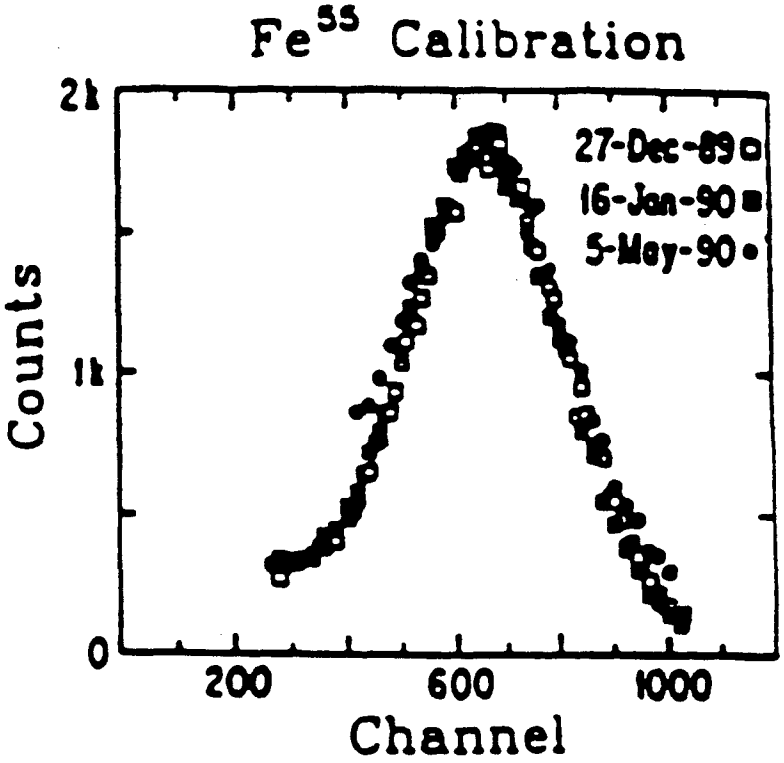

Engineering & Mechanical Design Issues

- Require 5μm wafer positional stability

  $<$ 2% radiation length

- Manage waste heat ($\approx$ 20 kW)

- Operate at -20^{0}C and + 10^{0}C

- Radiation exposure to be 10 Mrads over a 10-year service life

Los Alamos

Experience and Technology in Space & Reactor

Silicon detectors
are reverse-biased diodes

- Thickness = 300μm
- Collection time ~ 10 ns
- Voltage 25-200 V
- 32K electron-hole pairs for signals
- Noise < 1K electrons
- 25μm for inner layers, 50μm for outer layers
- with 5-mr stereo angle
- Radiation resistance to fluences : 10^{14} neutrons/cm^2
- Front-end electronics mounted on the detectors

Radiation Calculations

by : Los Alamos

L geometry*

Neutron fluence
in
Central Tracker volume

with $0.13X_0$
boron-polyethylene shield

$10^{12}/cm^2$ per year

1. *To distinguish* the sign e+ and e- *from a* 1 TeV particle

$$T \longrightarrow e + e -$$

2. *To measure* the multiplicity of charged particles surrounding e and μ

3. *To measure* the momentum of e and μ to match with precision e and μ measurements in specialized e and μ detectors

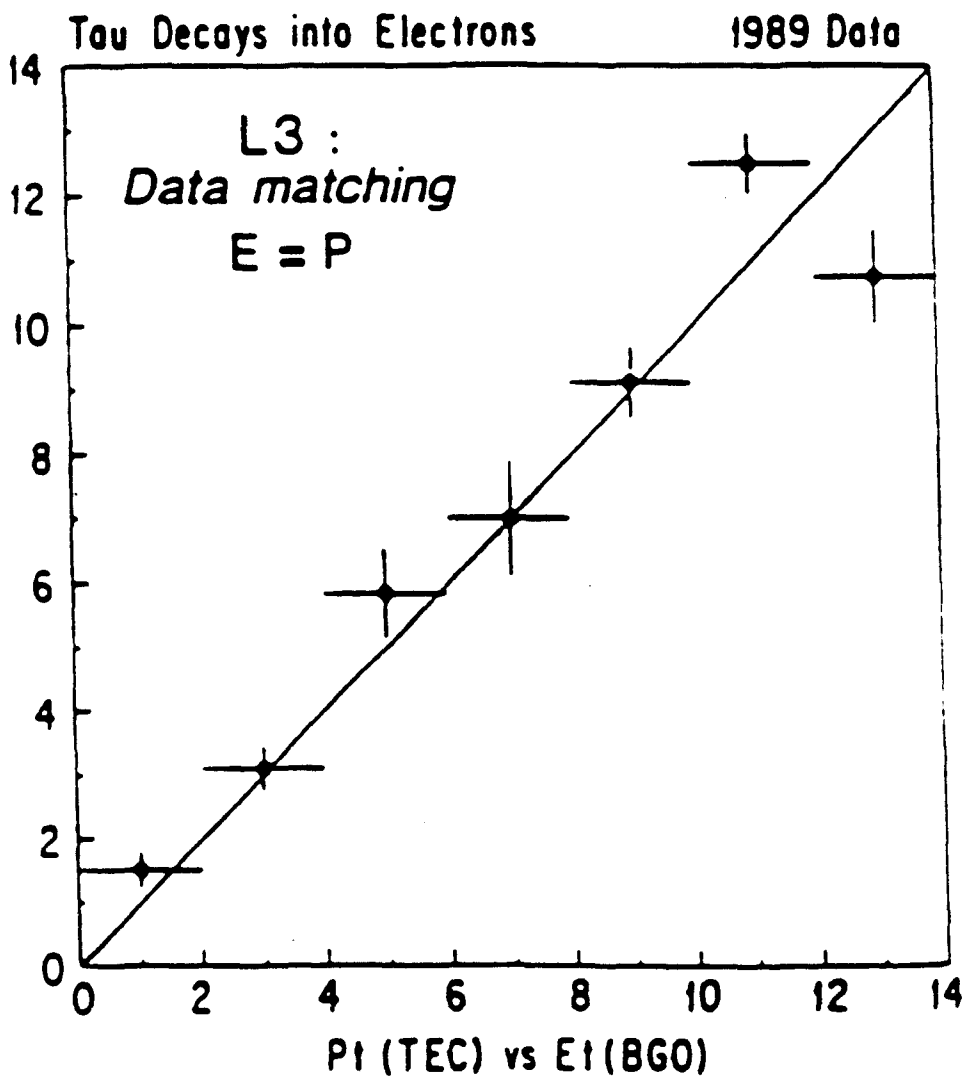

L* Central Tracker

silicon microstrips	$(7.6 \cdot 10^6)$	$10\ \text{cm} \le r \le 40\ \text{cm}$
		$\lvert z \rvert \le 150\ \text{cm}$
straw tubes &	(75000)	$40\ \text{cm} < r \le 75\ \text{cm}$
scintillation fibers	(50000)	$\lvert z \rvert \le 150\ \text{cm}$

angular acceptance $5^\circ \le \theta \le 175^\circ$

vertex resolution $(r\phi)$ $20\ \mu\text{m}$

(z) $1\ \text{mm}$

momentum resolution $\Delta p/p = 1.25 * 10^{-3} * p\ [\text{GeV}]$

$\equiv 50\ \%$ @ 400 GeV

L* Central Tracker: Silicon Detector

radial layers	6	(r*ϕ , z) cylinders
forward layers	2*12	(r*ϕ , r) disks
strip pitch for inner (outer) layers	25 (50)	μm
stereo angle on alternate layers	5	mrad
single detector thickness	300	μm (3.2 * 10^{-3} X_0)
signal size for a mip	32000	q_e
signal to noise ratio	30/1	typical
signal collection time	10	ns
radiation resistance to fluences	10^{14}	neutrons/cm^2

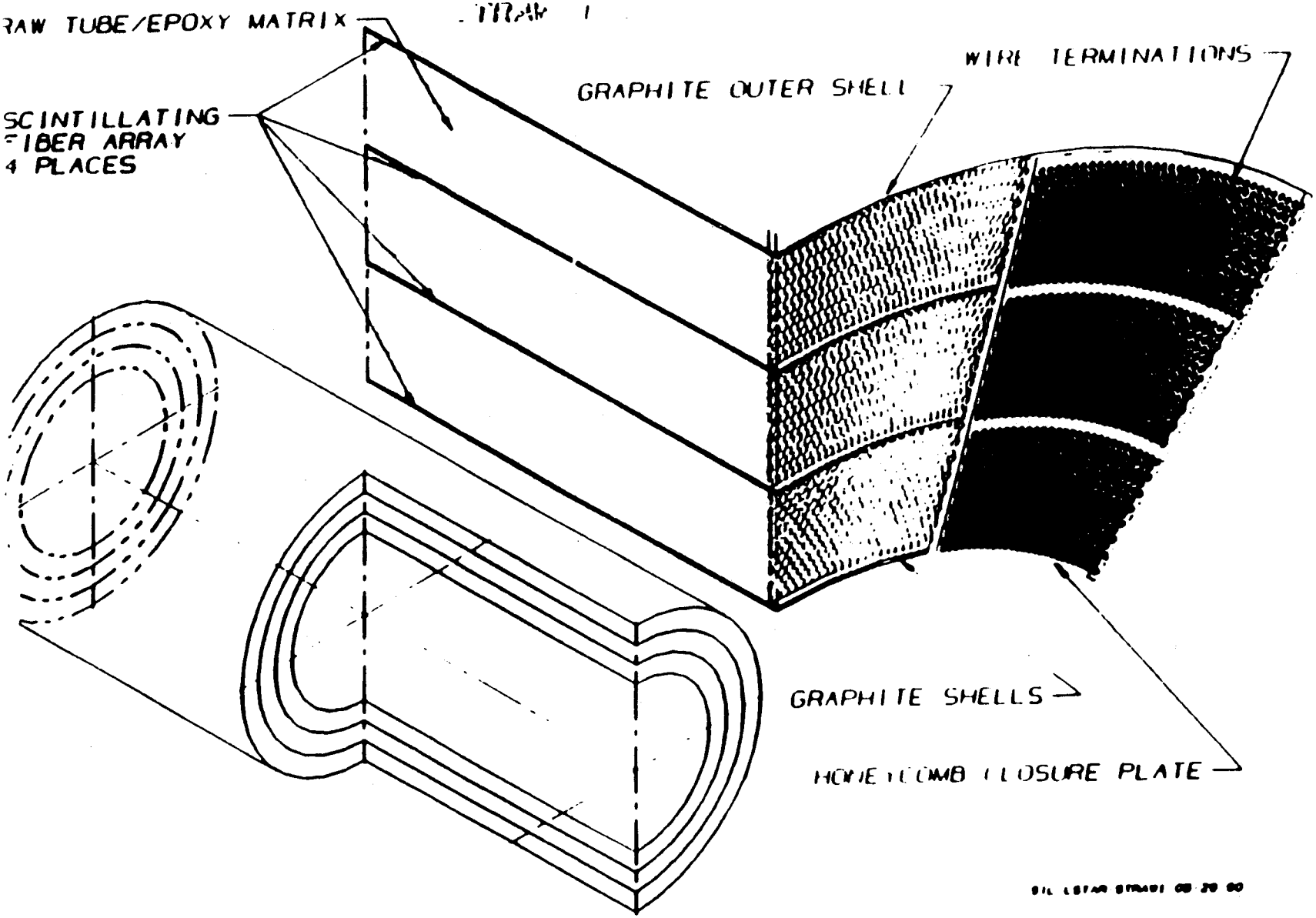
RAW TUBE/EPOXY MATRIX
SCINTILLATING
FIBER ARRAY
4 PLACES
GRAPHITE OUTER SHELL
WIRE TERMINATIONS
GRAPHITE SHELLS
HONEYCOMB CLOSURE PLATE

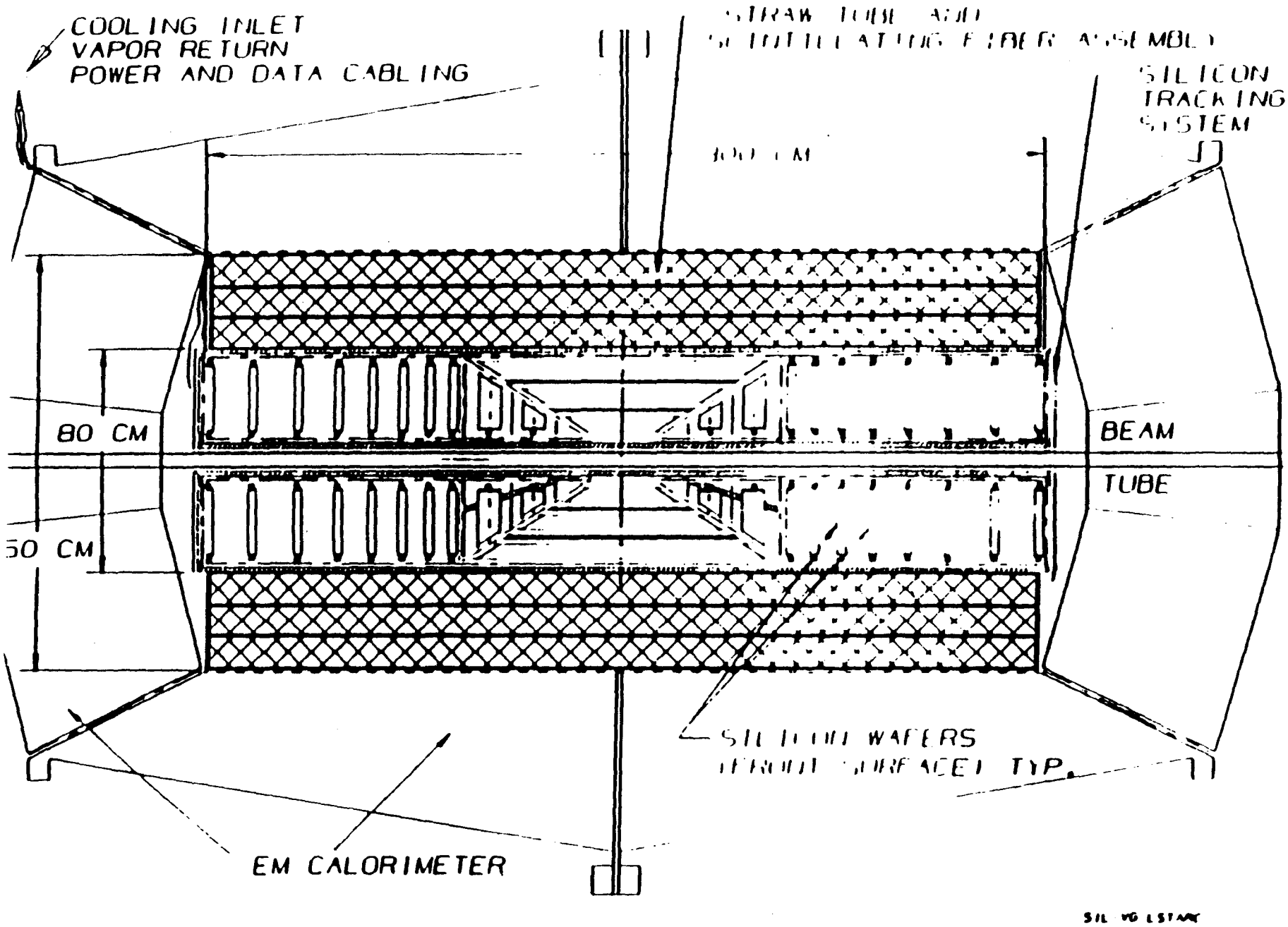
COOLING INLET
VAPOR RETURN
POWER AND DATA CABLING
SILICON
TRACKING
SYSTEM
80 CM
BEAM
TUBE
50 CM
EM CALORIMETER

R & D needed on:

UV-photodiodes: Japan

Uniform light collection efficiency: Japan

Radiation resistance of UV-diodes: MIT-Japan

Low noise, wider dynamical range, faster amplifiers: MIT-ORNL

Inexpensive flash ADC's: LeCroy

Improved purification system: Columbia-MIT

New production methods for xenon:

Union Carbide

Liquid Air (Alphagaz)

Spectra Gases, INC.

Matheson

Stable α' signal provides reliable calibration.

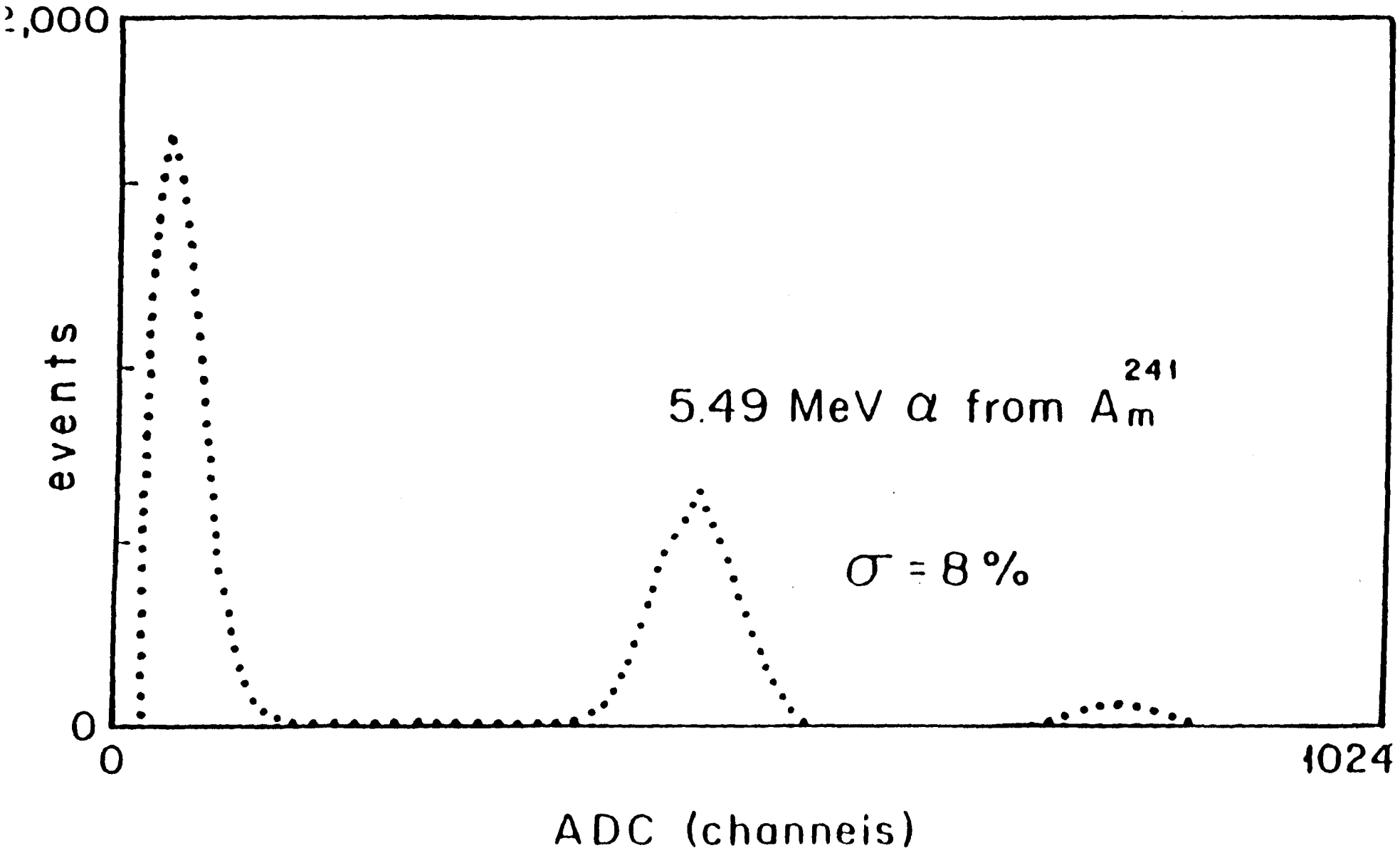

Proto-type Work:

Light attenuation >> 7 cm,

Photoelectron yield: 50,000/5.5 MeV α's or 10^7/GeV

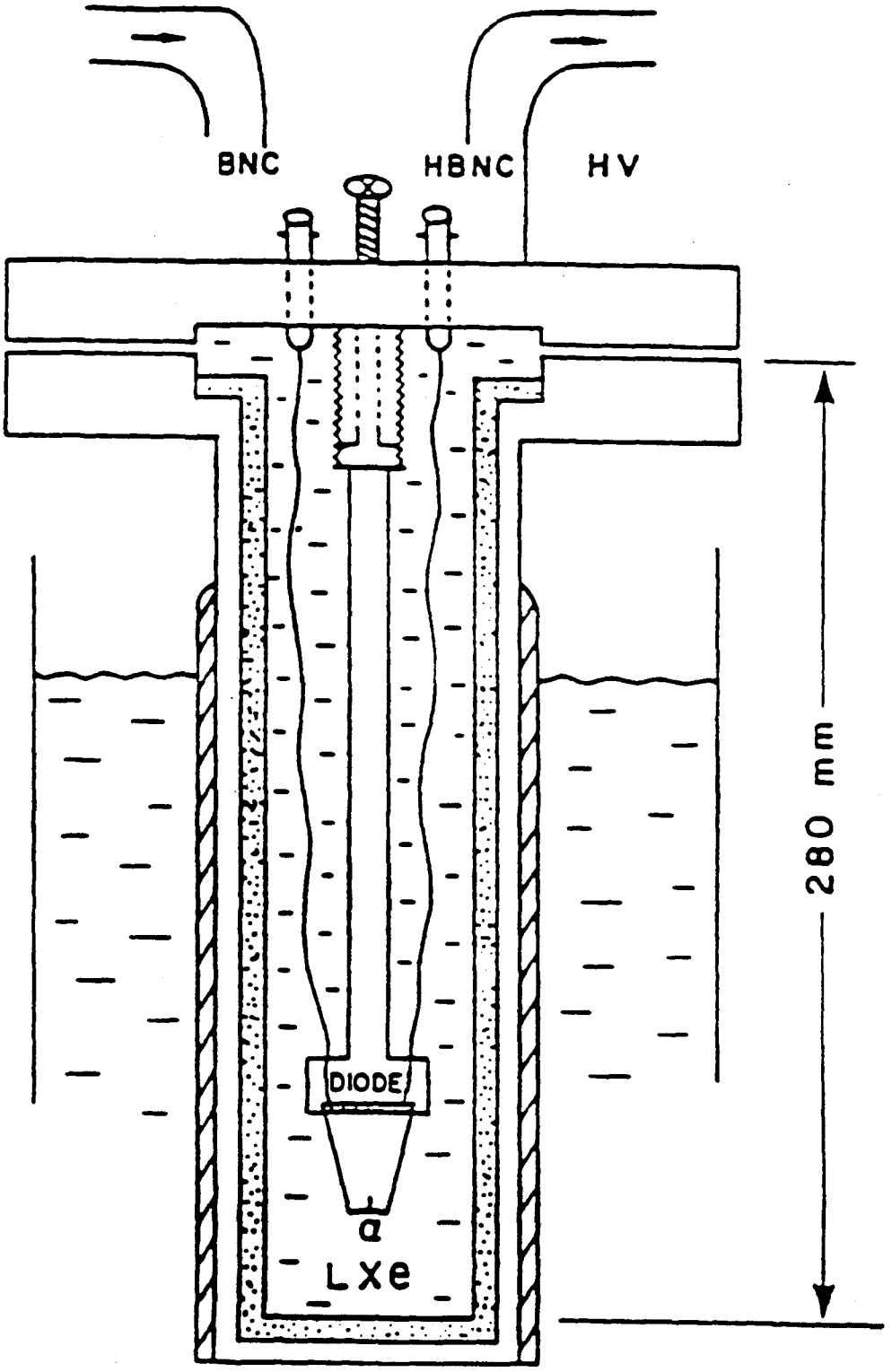

Components of LXe Cell

I. Photosensors

5 cm diameter (Waseda) or
1 cm * 1 cm (Hamamatsu).
Rise time: 10 ns
Quantum efficiency: 80% at 170 nm.
Operate in magnetic field.

II. UV Reflectors

100 μm kapton foil coated with Al and
MgF_2 with 85% reflectivity tested.

III. Amplifiers

10 ns rise time at 500 pf.

L* Electromagnetic Calorimeter
Liquid Xenon Option

Ellipsoidal Shape Covering $|\eta| < 3$
5.2 m Long; 2.8 m Diameter
15 m^3 Liquid Xenon
24,000 Cells
72,000 Readout Channels

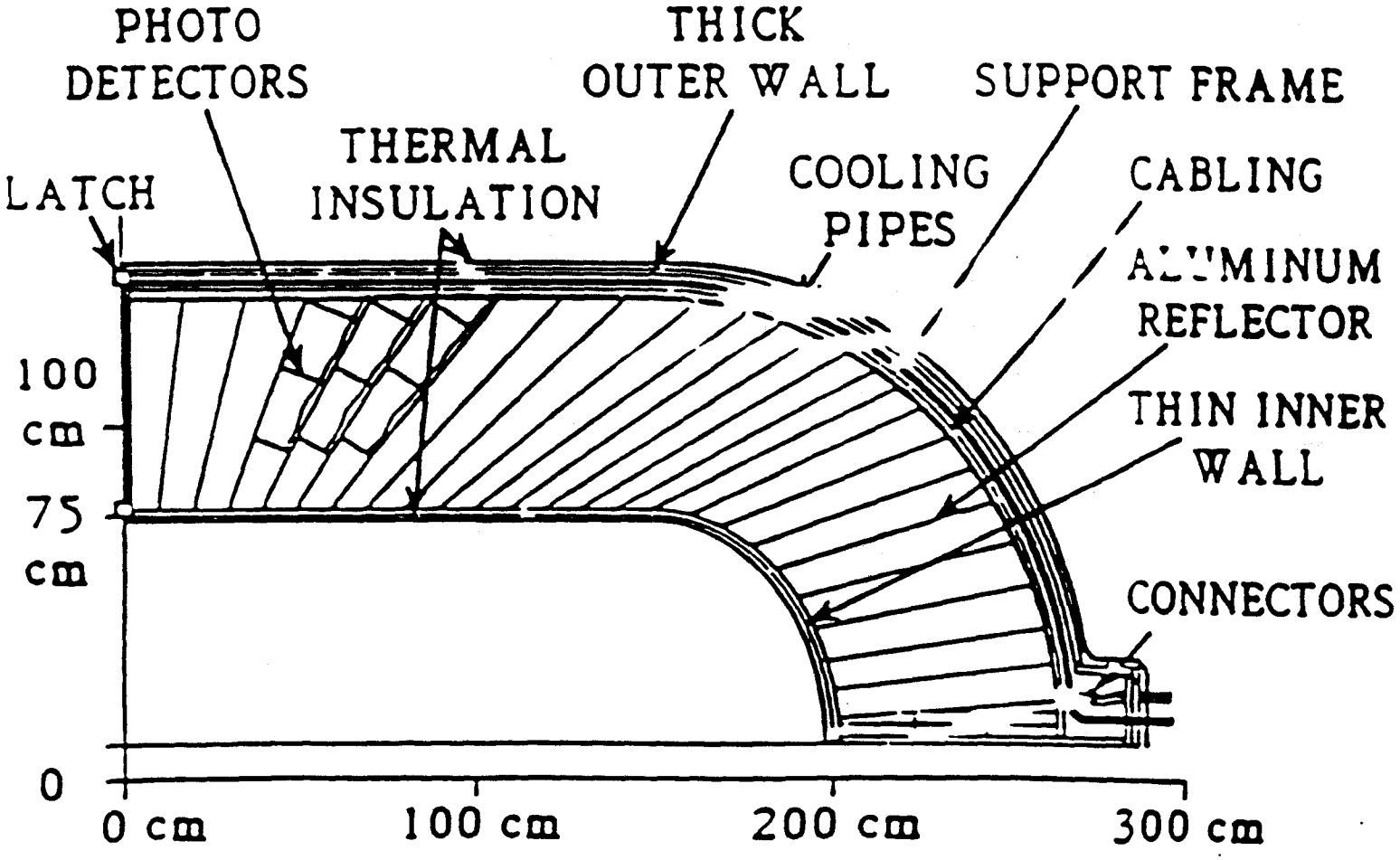

Construction: 1993 - 1997

Crystal Production: Shanghai, Beijing

Quality Control:
Caltech, Annecy, CMU, Aachen, Bombay

Radiation Hardness: Caltech, CMU

Mechanical Support: ORNL, Annecy, Aachen

Photodevice: Caltech, CMU, Aachen, Bombay

Electronics: Princeton, Caltech,
ORNL, Rome, Los Alamos, Geneva

RFQ Calibration: Caltech, CMU, Geneva

System Assembly: Caltech, Annecy, ORNL,
Princeton, Aachen, Geneva, Bombay

Crystal R&D Program
SIC (Shanghai) and BGRI (Beijing)

- **Mass Production Methods for Growing Fast, Transparent Rad Hard Crystals**
- **Use Pure and Doped BaF_2 Pilot Crystals**
- Systematic Study of Rare-Earth Especially La-Doped BaF_2 Crystals
- **Systematic Study of New Fluoride Crystal Scintillators: CeF_3, LaF_3, and other Rare-Earth Fluorides**

Manpower: 25-30 FTEs Per Year, For Three Years

CALIBRATION IN SITU

RFQ

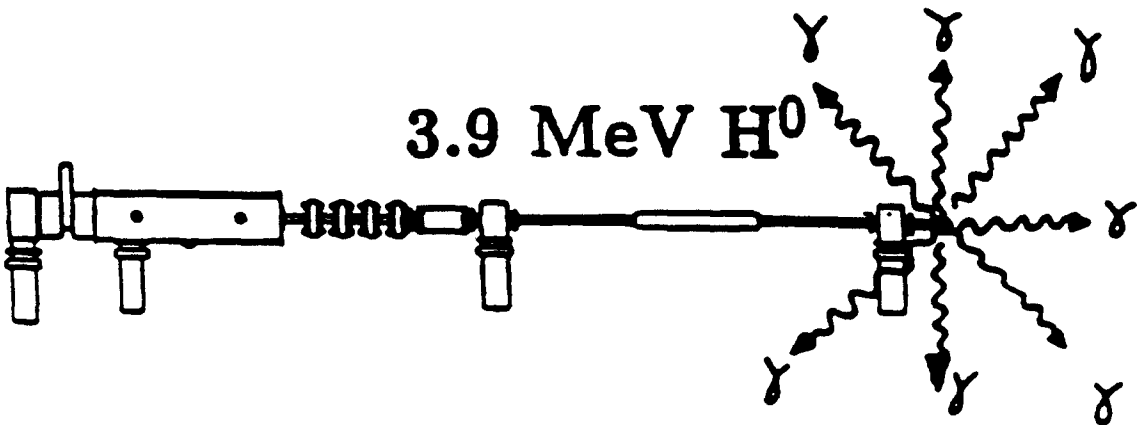

Up To 40 GeV Equivalent Per Crystal
Per 1 μsec RFQ Beam Pulse

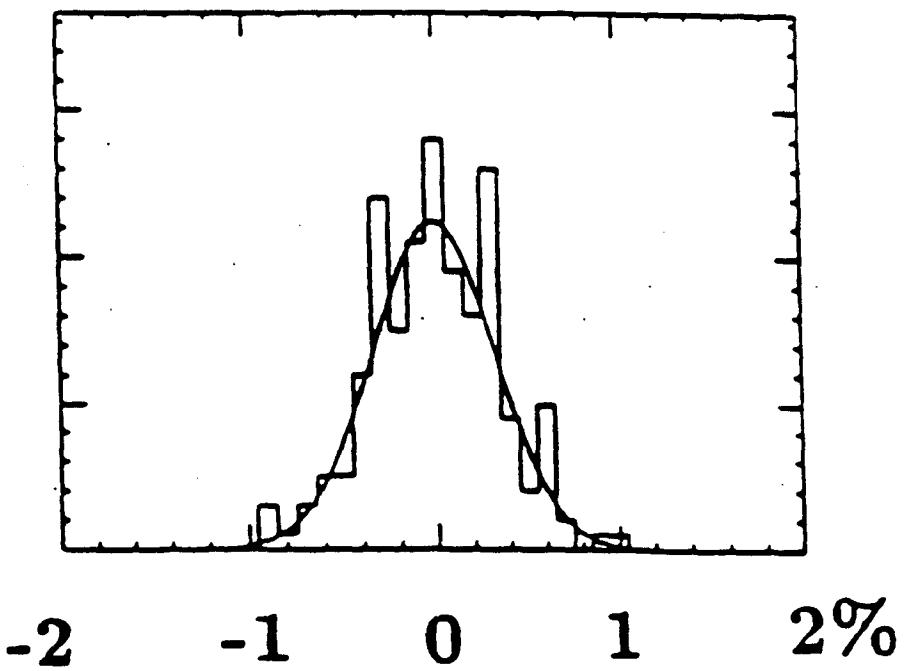

TEST RESULT:
RMS DEVIATION of PEAK= 0.3%

Scintillation of BaF_2

Select Fast Components

K-Cs-Te Photocathode

After Shaping, No La Doping
Effective F/S > 1000

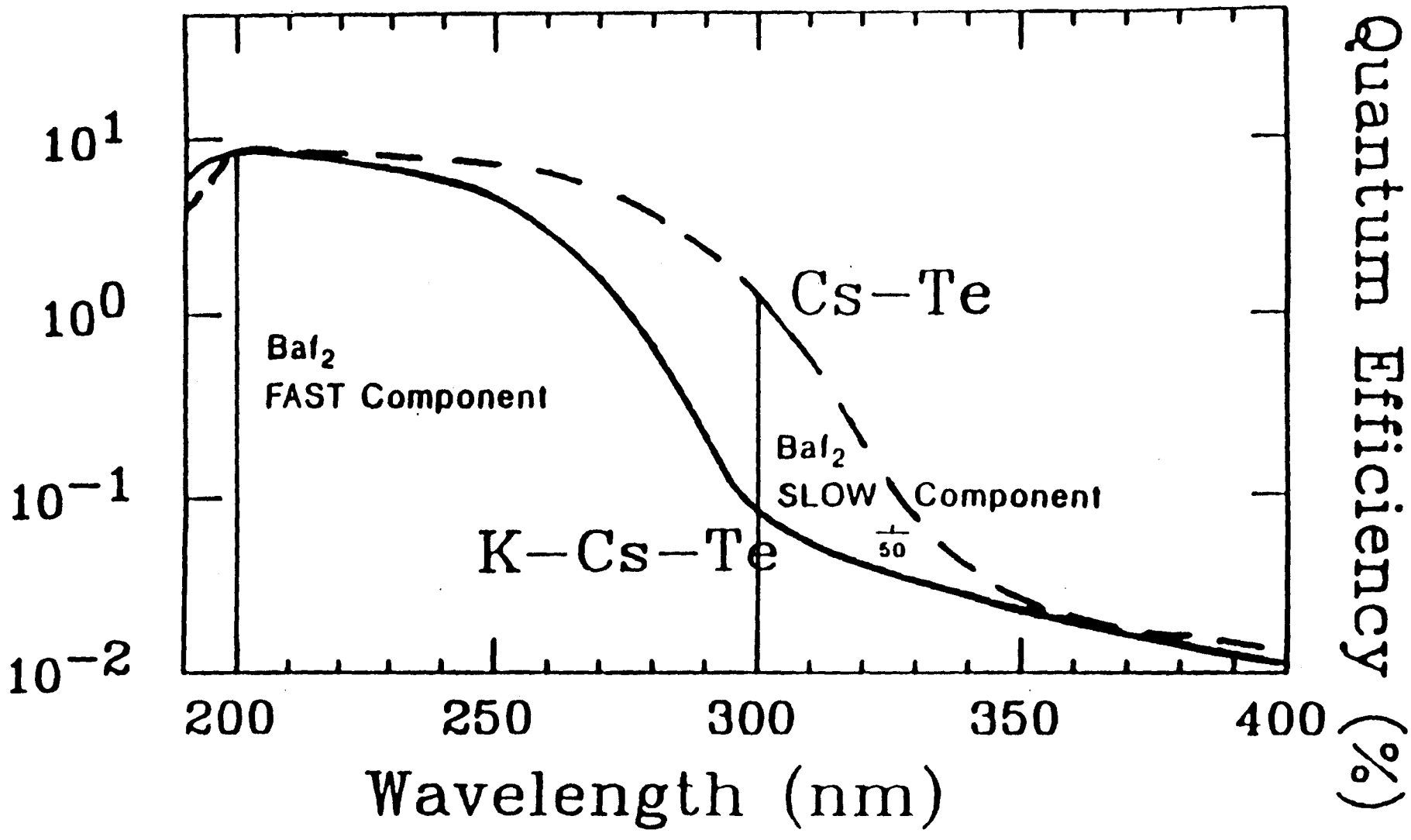
Quantum Efficiency (%)
10^1
10^0
10^{-1}
10^{-2}
200
250
300
350
400
Wavelength (nm)
Cs–Te
K–Cs–Te
BaF_2
FAST Component
BaF_2
SLOW Component
÷ 50

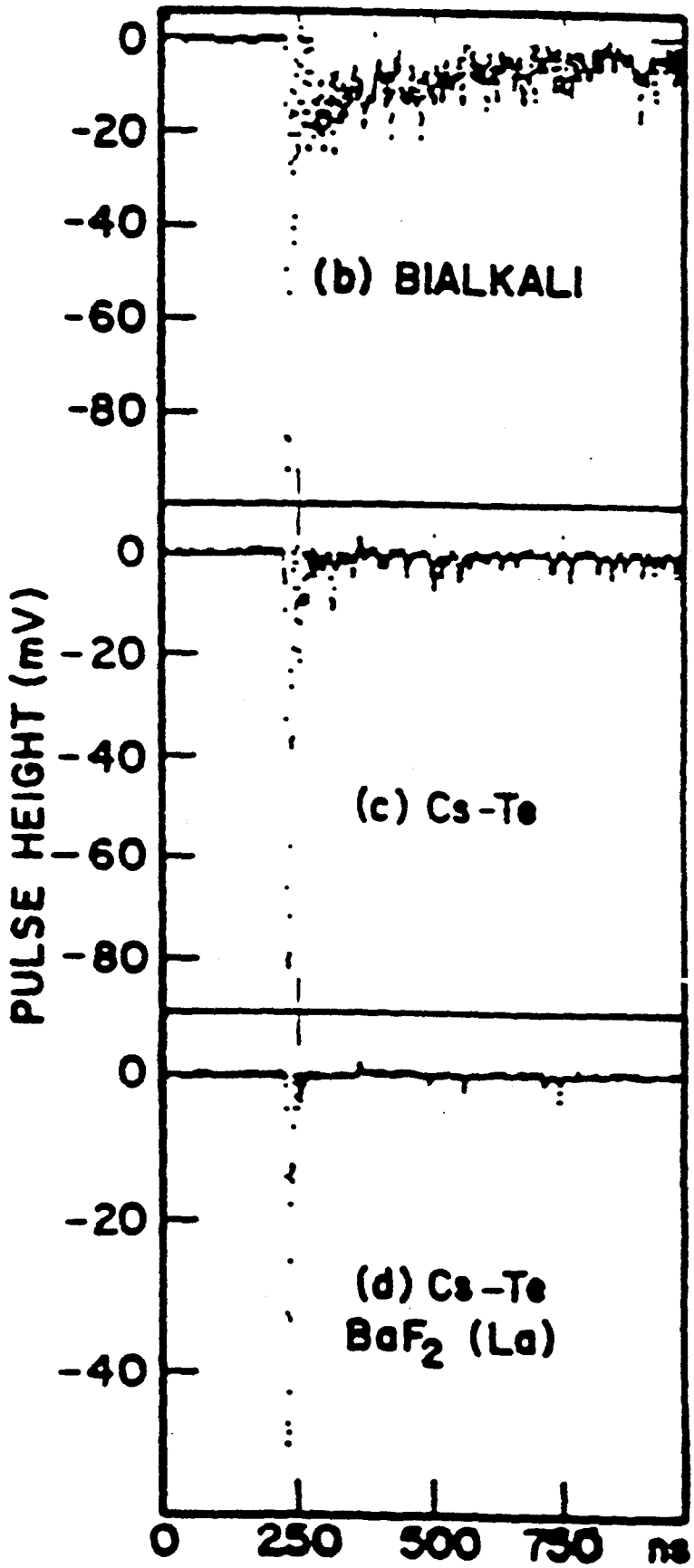
0
-20
-40
-60
-80
(b) BIALKALI
0
-20
-40
-60
-80
(c) Cs-Te
PULSE HEIGHT (mV)
0
-20
-40
(d) Cs-Te
BaF2 (La)
0
250
500
750
ns

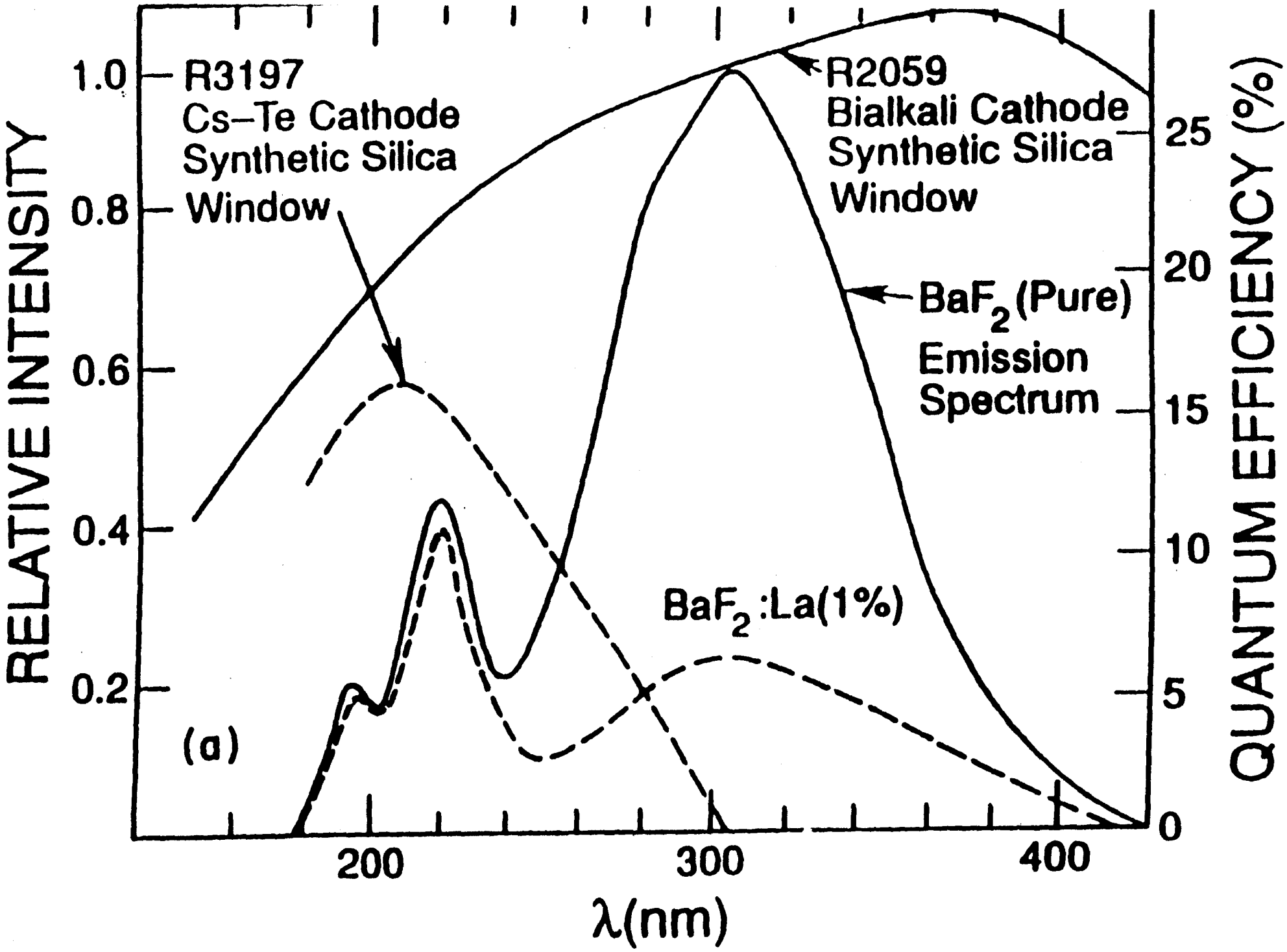
R3197
Cs–Te Cathode
Synthetic Silica
Window
R2059
Bialkali Cathode
Synthetic Silica
Window
BaF2 (Pure)
Emission
Spectrum
BaF2 :La(1%)
(a)
RELATIVE INTENSITY
QUANTUM EFFICIENCY (%)
λ(nm)
1.0
0.8
0.6
0.4
0.2
25
20
15
10
5
0
200
300
400

L* Precision EM Calorimeter Based on L3 Experience Large Scale R&D Over the Last 10 Years

- Mass Production of Large, Radiation Resistant Crystals
  Shanghai, Annecy, Caltech, CMU
- Electronic Readout: Linear to 0.1%
  10^6 Dynamic Range
  Princeton, Lyon, Aachen, Rome
- Cooling System: Constant to 0.1 °C
  Over Large Volumes
  Lausanne
- Thin Carbon Fiber Support:
  Minimize Inactive Material
  Annecy, Rome
- Calibration in situ to < 1%
  Caltech, Geneva, Lyon, Rome

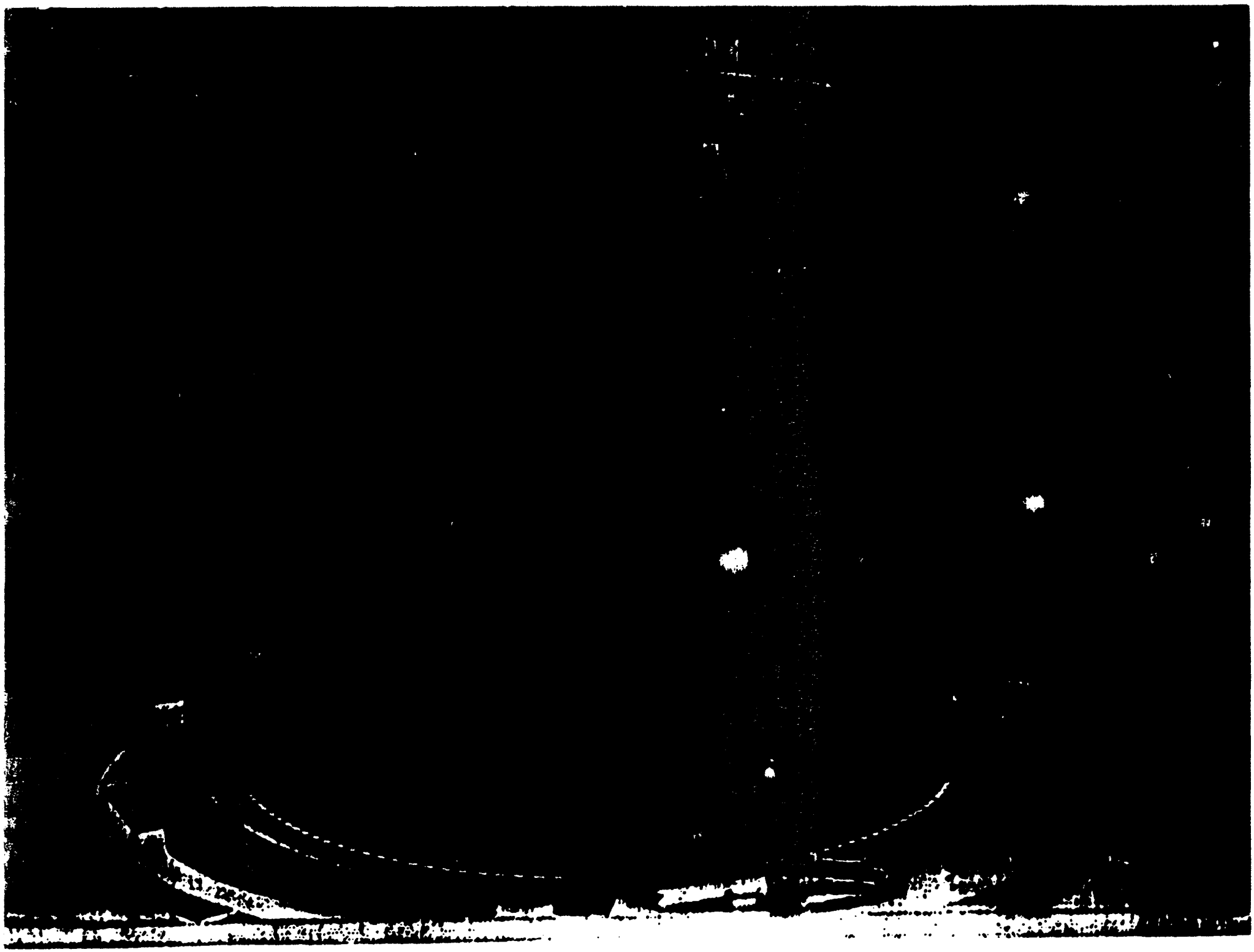

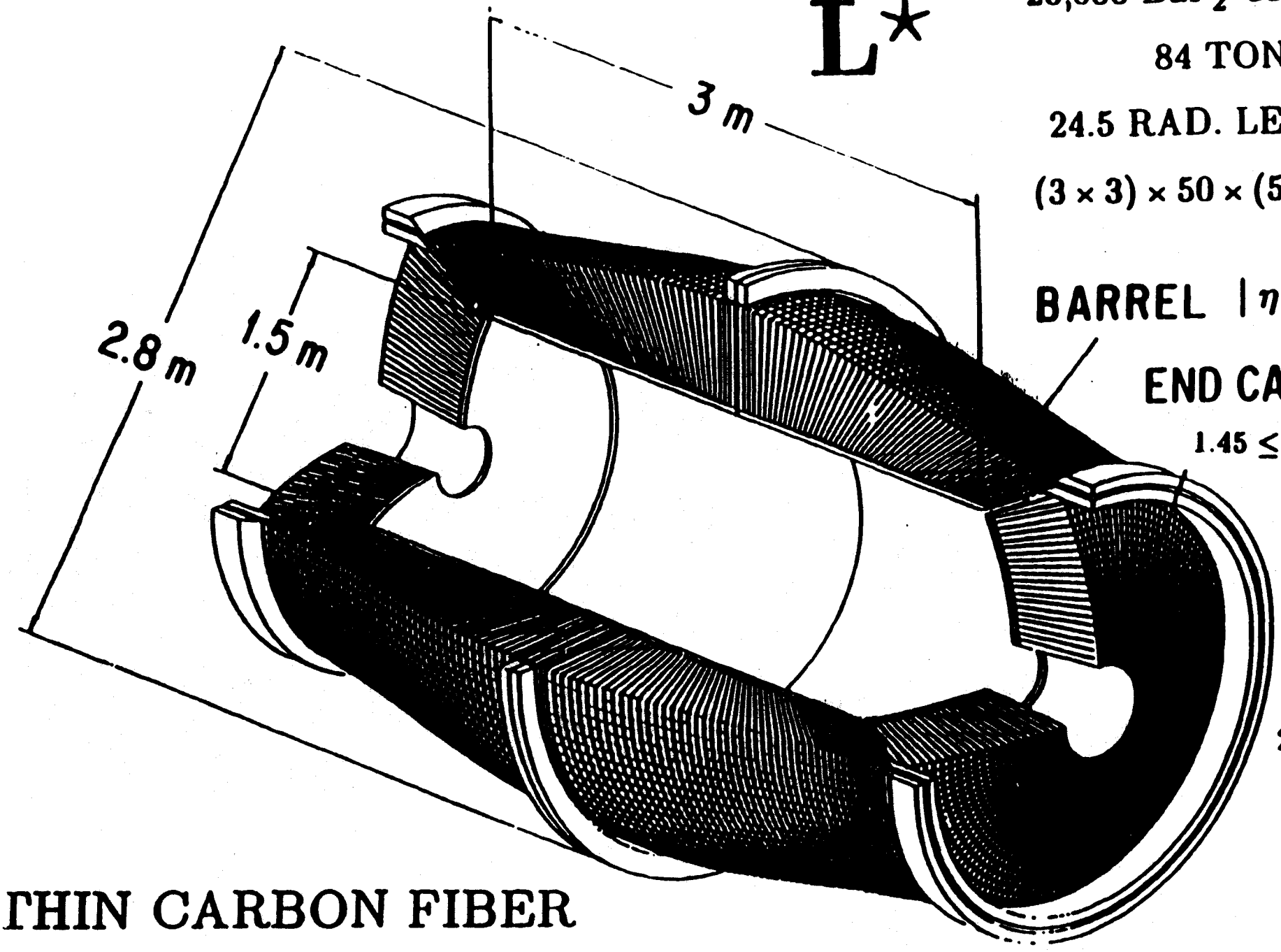

26,000 BaF_2 CRYSTALS

84 TONS

24.5 RAD. LENGTHS

$(3 \times 3) \times 50 \times (5 \times 5)$ cm^3

BARREL $|\eta| \leq 1.45$

END CAP

$1.45 \leq |\eta| \leq 2.8$

Forward Cone:

$z = \pm 10.5$

$2.8 \leq |\eta| \leq$

ΓHIN CARBON FIBER

)0-300μm TOLERANCES

L* Electromagnetic Calorimeter (BaF_2)

$$\frac{\sigma}{E} = \frac{1.3\%}{\sqrt{E}} + 0.5\%$$

- e/jet $\approx 10^{-4}$
- Shaping time 3 ns, gate in One Beam-Crossing
- Radiation Resistance
- $\Delta\theta = \Delta\varphi = 0.2^{\circ}$

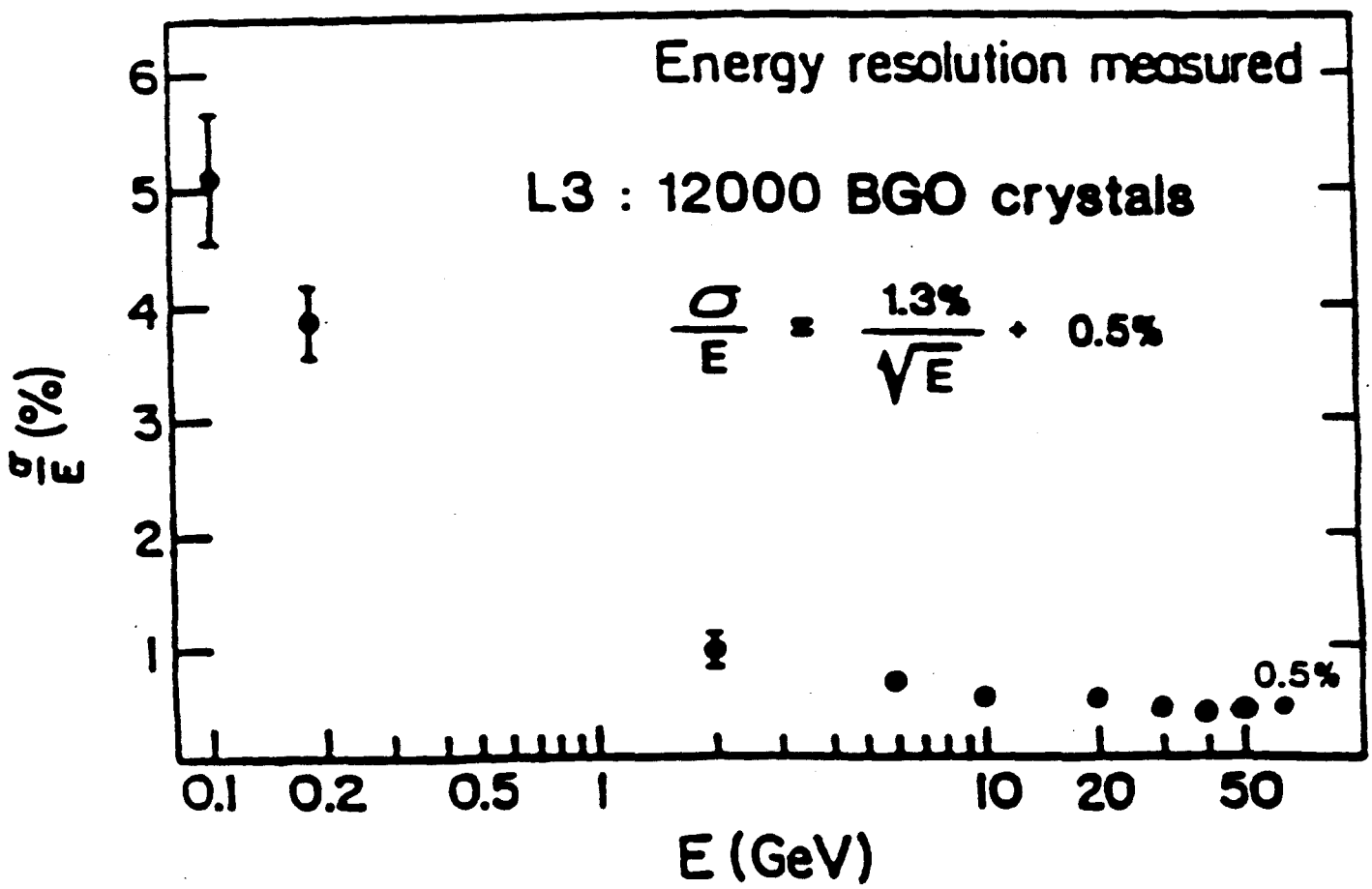

HC CONSTRUCTION
SILICON OPTION

CENTRAL AND ENDCAP REGIONS

DESIGN 1991/92

ORNL/ITEP/DUBNA/TENN

Si DETECTORS 1993/97

DUBNA/TENN R & D for production

DUBNA/ORNL Ingots and wafers, Qualit

ITEP/SERP Prototype construction

Tests at ITEP/ SERP, Quality control

ELECTRONICS 1993/97

ORNL/TENN Prototype/acceptance tests

MECHANICS 1994/97

ORNL Supporting and cooling

ORNL/ITEP Assembly

ASSEMBLY 1996/98

ITEP/DUBNA/ORNL Detector assembly

Calibration system, Acceptance tests

SIMULATION

ORNL/ITEP/DUBNA/SERP/MISS/LANL

FORWARD SYSTEMS

RWTH/ ALABAMA/ BOMBAY

HC CONSTRUCTION
LIQUID SCINT. OPTION

CENTRAL AND ENDCAP REGIONS

DESIGN 1991/92

ORNL/ITEP/LLNL/TENN

DETECTORS 1993/97

ITEP/ORNL R & D for production

ITEP/ORNL Detectors, Quality

ITEP/SERP Prototype construction

LLNL/ORNL Photodetectors

ELECTRONICS 1993/97

ORNL/TENN Prototype/acceptance tests

MECHANICS 1994/97

ORNL Supporting and cooling

ORNL/ITEP Assembly

ASSEMBLY 1996/98

ITEP/DUBNA/ORNL Detector assembly

Calibration system,Acceptance tests

SIMULATION

ORNL/ITEP/DUBNA/SERP/MISS/LANL

FORWARD SYSTEMS

RWTH/ ALABAMA/ BOMBAY

ward Calorimeter Systems

angular coverag

$0.3° \leq \theta \leq 6.7°$

$5.95 \geq \eta \geq 2.84$

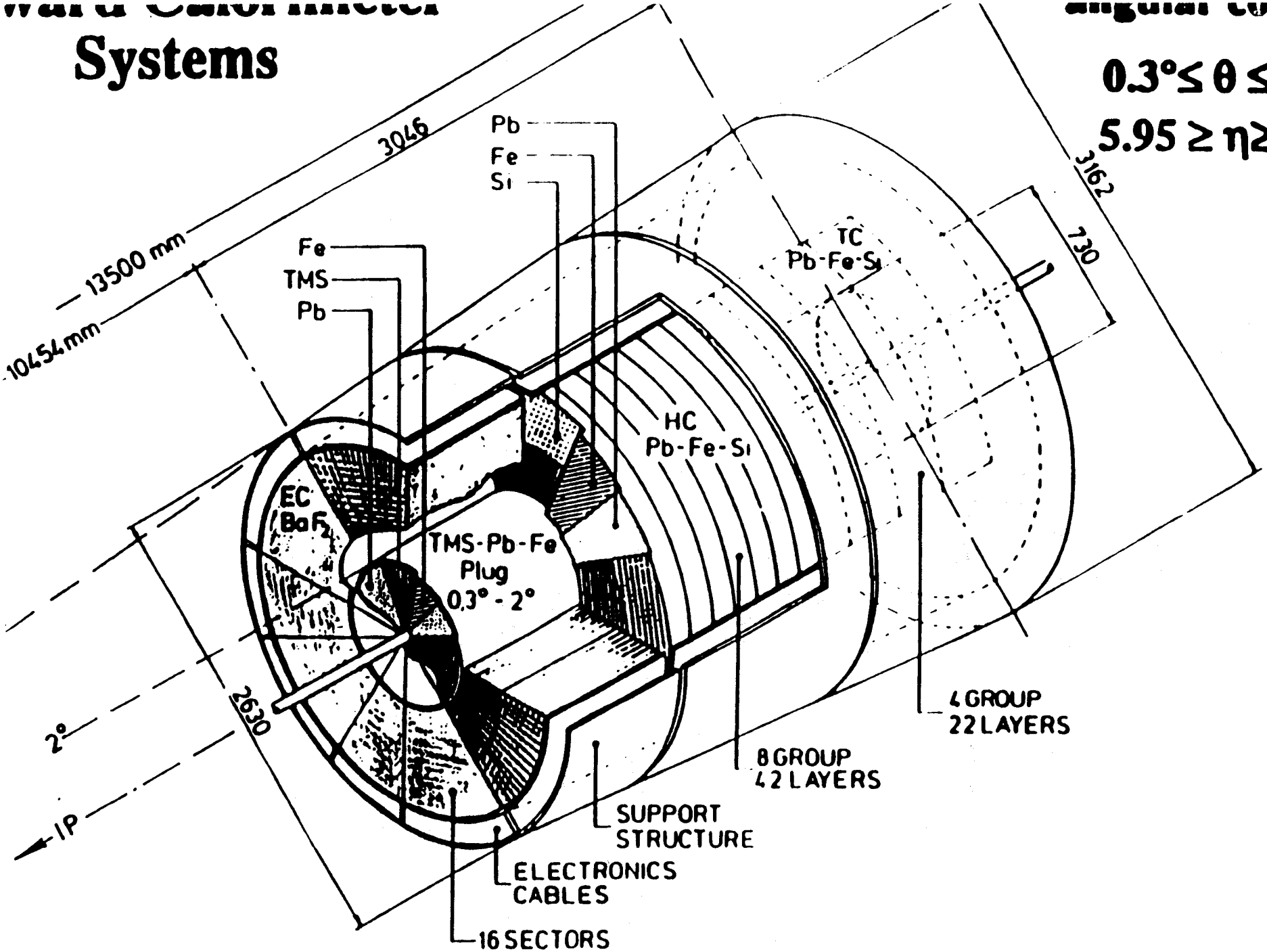

LIQUID SCINTILLATOR
R & D STATUS

ITEP a prototype detector plane

is under construction

Livermore will construct a cell and test it

with new photodetectors

ORNL together with ITEP will build

the hadron calorimeter prototype module

of 6 λ deep and test it

LIQUID SCINTILLATOR R&D ISSUES

* Light collection system optimization
* Scintillator should match the fiber both chemically and optically
* Fiber gluing and sealing techniques
* Photodetectors: fast, compact, stable, tolerant to magnetic field
* Radiation resistance of fibers

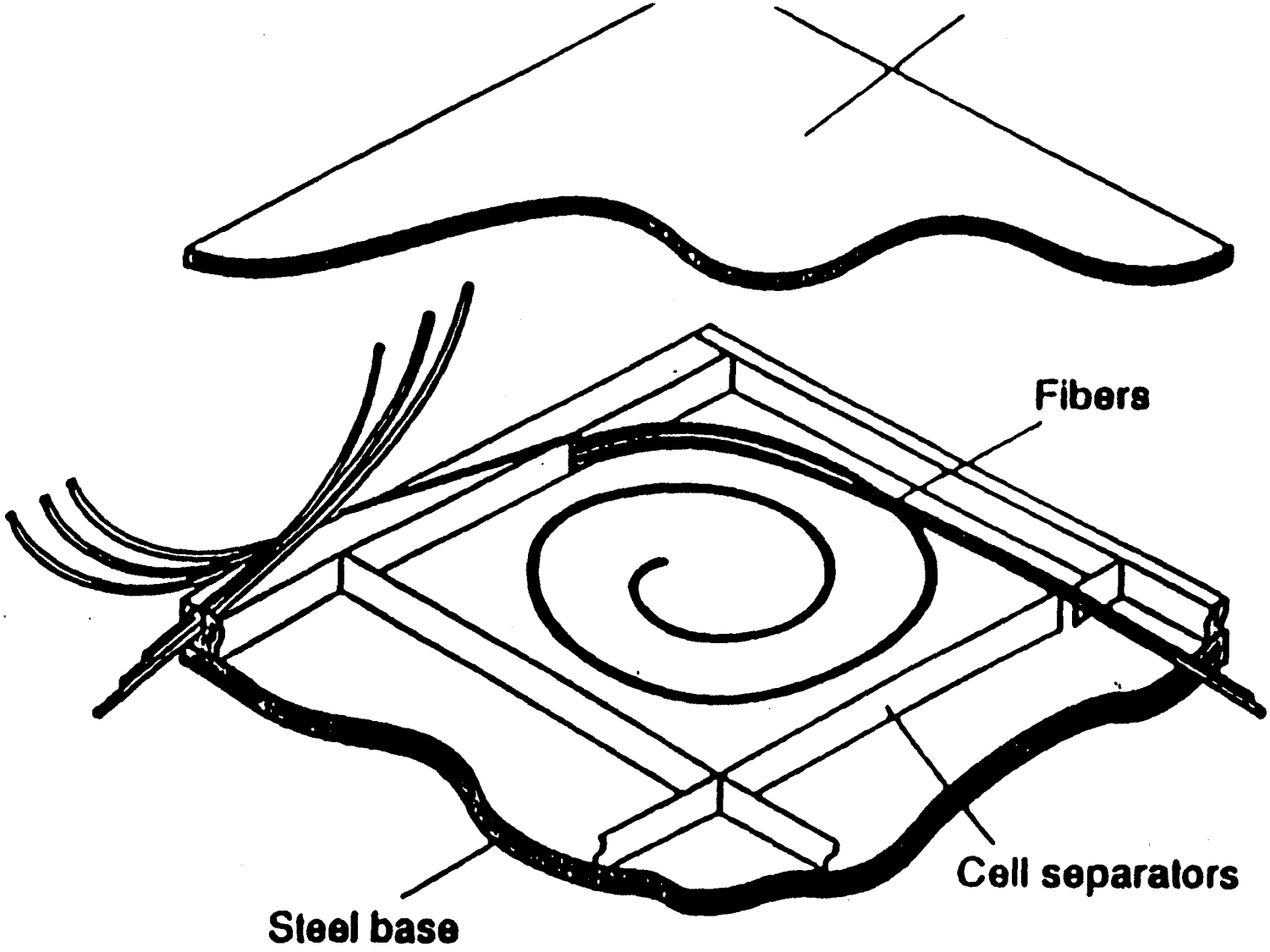

The light readout is made thru a fiber that spirals inside the liquid scintillator cell

Liquid Scintillator Option

Decay time : 2ns

Mechanical design

and

Segmentation

are the same as for Si

except for detector gap (5mm) and absorber/detector thickness

Simulation

80 photons/per MIP/ Layer

at photodetector input

SILICON DETECTOR
R & D PROGRAM

Started in 1988

40 ITEP and 30 Dubna physicists and engineers

ITEP, U Tenn, ORNL, Dubna construct
a silicon detector 0.5m x o.5m
to perform beam scan
of hadron and electron showers

ITEP, U Miss, RWTH (Aachen) coordinate
simulation studies

Silicon Procurement

Silicon detectors are from USSR
JINR *(Dubna) is coordinating the effort.*

➔ *Current crystal production :*
Ti-Mg Factory (TMF) Ukraine

- monocrystals 76mm, 10cm long
- annual production 5 - 6 tons

➔ *Current wafer production :*
Univ. of Bielorussia Research Center, Minsk

- performs slicing, lapping, polishing, thermal oxidation, photolitography, ion implantation
- annual production of 700'000 wafers

➔ *Silicon amount needed :*
5000m^2 or 24 tons (20% contingency included)
3'000'000 wafers

Silicon
Issues to be solved

(1) Cost

(2) e/h = 1 for Si/U

More tests of Si/Fe-Pb are under way (SICAPO)

(3) Radiation damage *should be understood*

(4) Radiation hardness *Silicon calorimeter should withstand total annual neutron fluence* 10^{12} to 10^{13} neutrons/cm^2

Dose due to charged particles is less important

ADVANTAGES OF SILICON

- Speed : transit time 15-30 nsec
- Linear Response : no saturation
- Transverse and longitudinal segmentation:

  only limited by number of channels
- No cryogenics
- Insensitive to magnetic fields
- Monitoring : easy by source
- Mechanics : simple
- Stability in time : very good

RADIATION EFFECTS ON SILICON

- Radiation damage in silicon is bulk damage due to trap formation.
  Leakage current increase due to these traps is highly temperature dependent.
  We plan to operate the detector at -20°C
  This gives factor 30-80 in radiation hardness

- The traditional use of Si in nuclear spectroscopy required long shaping times and low noise, noise increase due to leakage increase was not tolerable.
  In case of 10ns shaping time the effect of noise due to leakage current is negligible.

These two factors provide 2 to 3 orders of magnitude improvement in Si radiation hardness.

Trigger Considerations

- *Fast energy trigger*

- *Fast isolated muon trigger is also possible due to fine longitudinal and transversal segmentation*

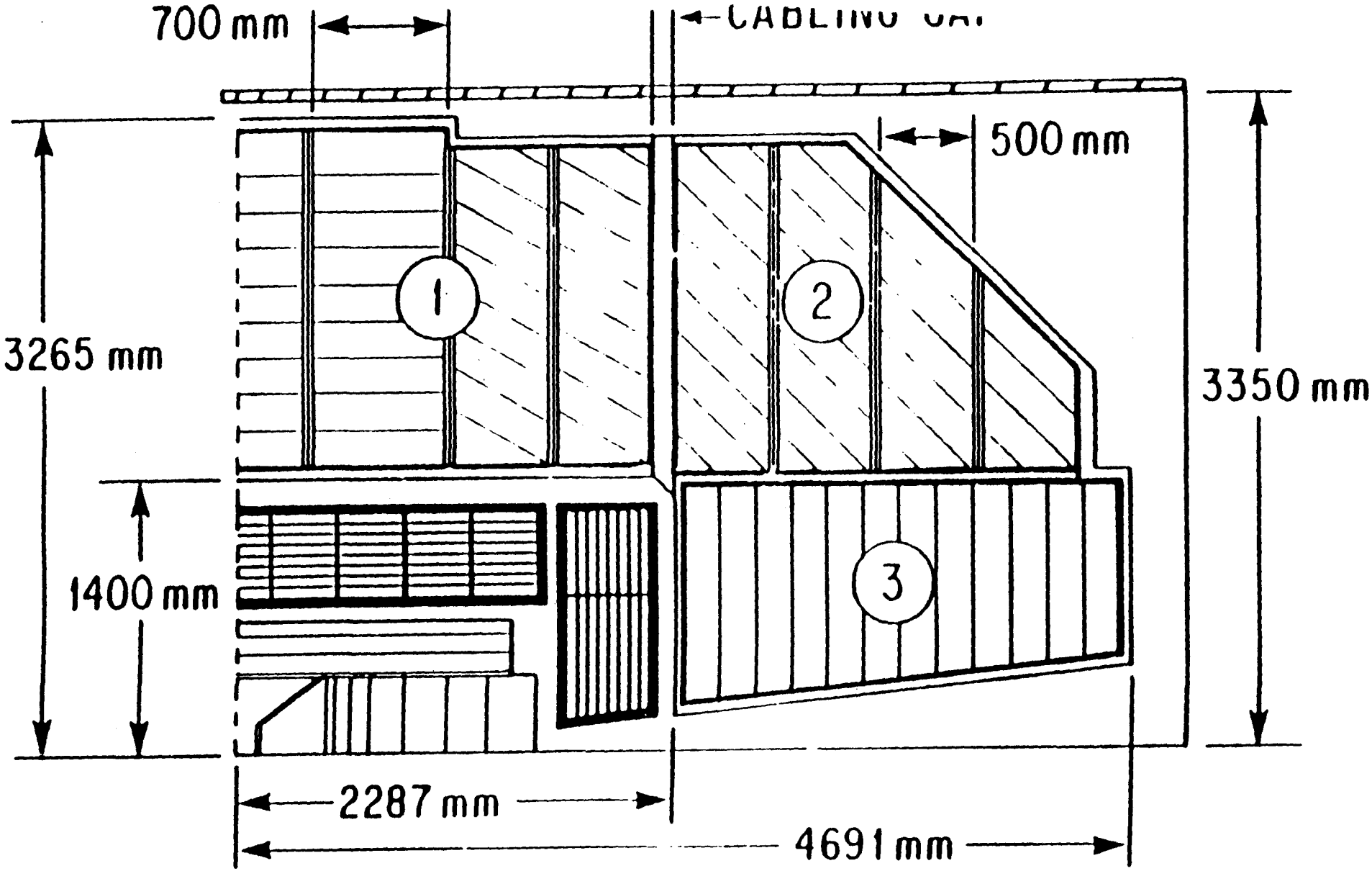

PROPOSED SILICON CALORIMETER
SIDE QUARTER SECTION

The e-m calorimeter is designed in a way that it can be replaced by a fine sampling ($0.5X_0$) silicon section.
The entire calorimeter should be compensating.

$$\frac{\sigma_h}{E} = \frac{50\%}{\sqrt{E}} + 1\%$$

$$\frac{\sigma_{em}}{E} = \frac{15\%}{\sqrt{E}} + 1\%$$

Where the 1 % constant term is defined by systematic uncertainties of calibration, uniformity, stability, etc.

EXPECTED ENERGY RESOLUTION

From our experience with the L3 calorimeter the jet energy resolution of the combined BaF_2 and Si/Fe-Pb calorimeter system will be:

$$\frac{\sigma_h}{E} = \frac{50\%}{\sqrt{E}} + 4\%$$
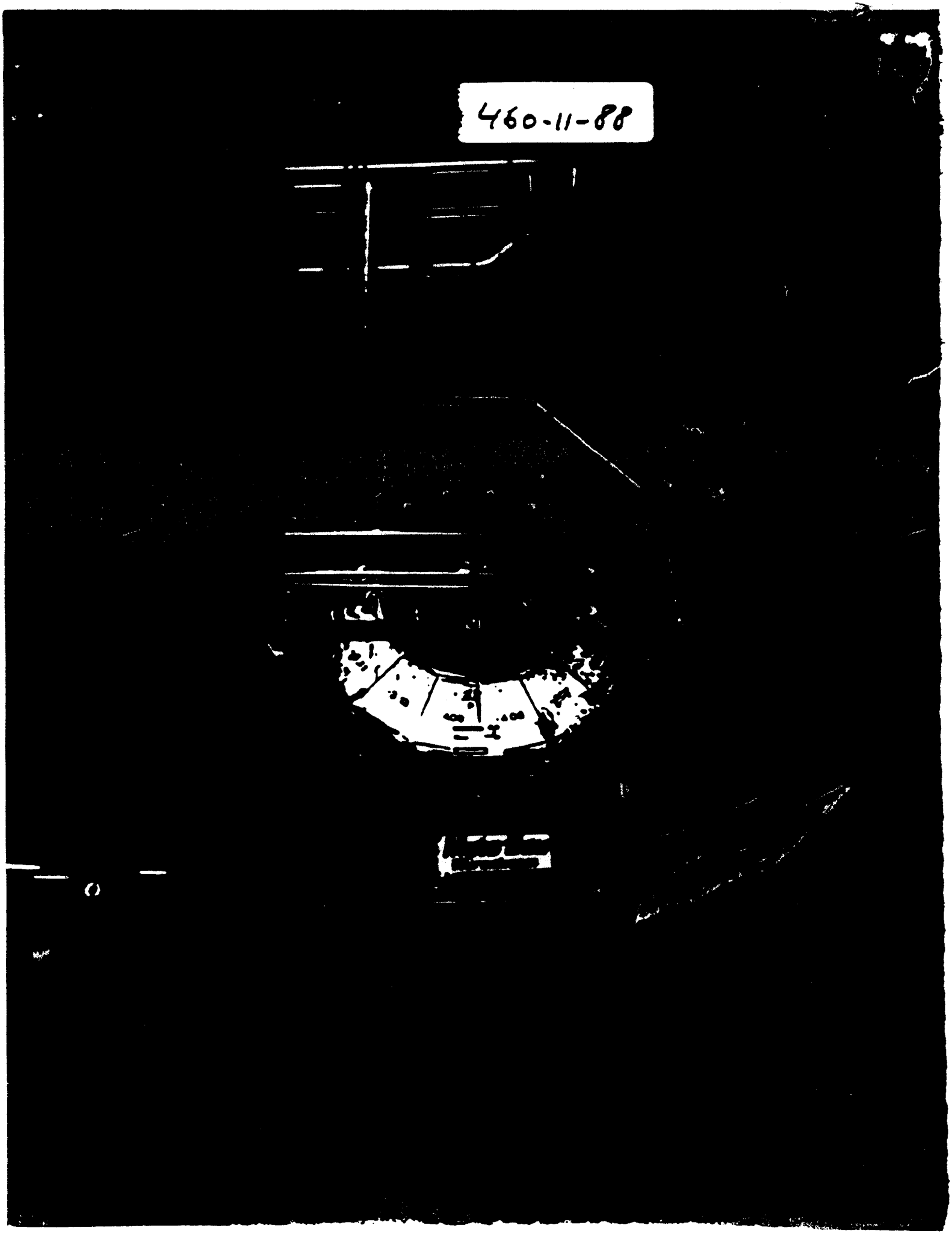
460-11-88