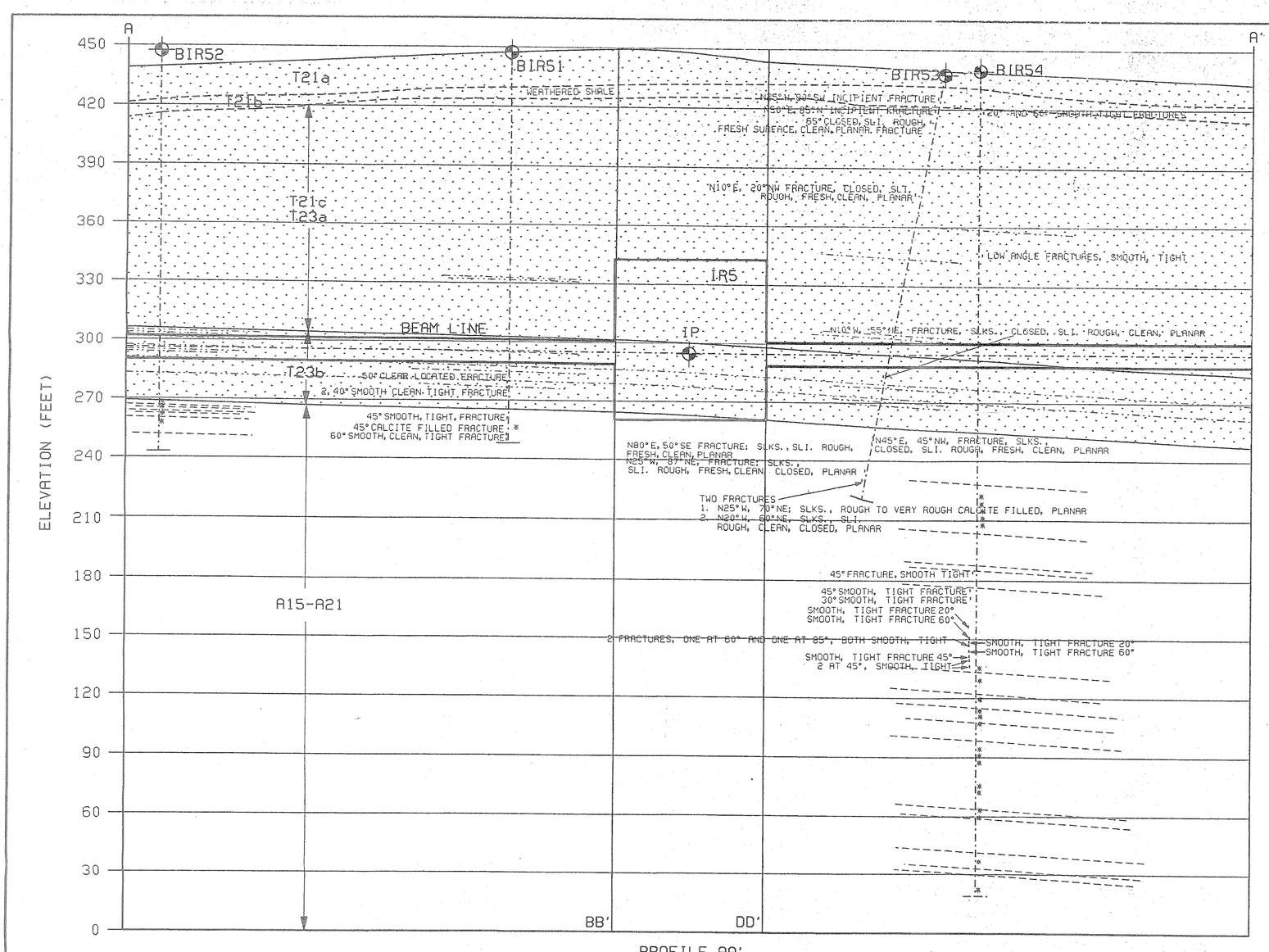

PROFILE AA'

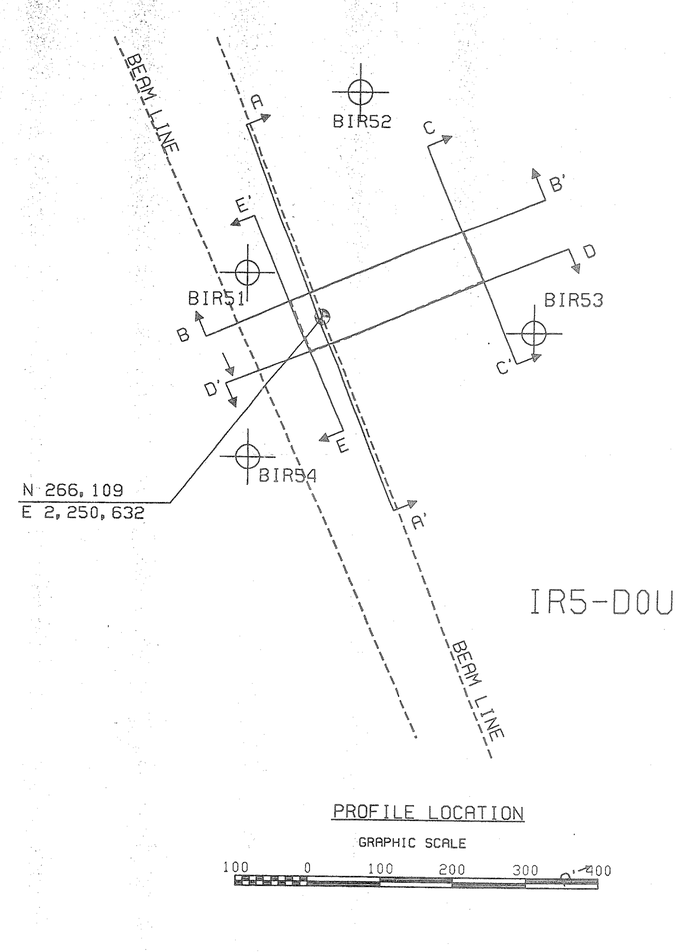

PROFILE LOCATION

GRAPHIC SCALE

100 0 100 200 300 400

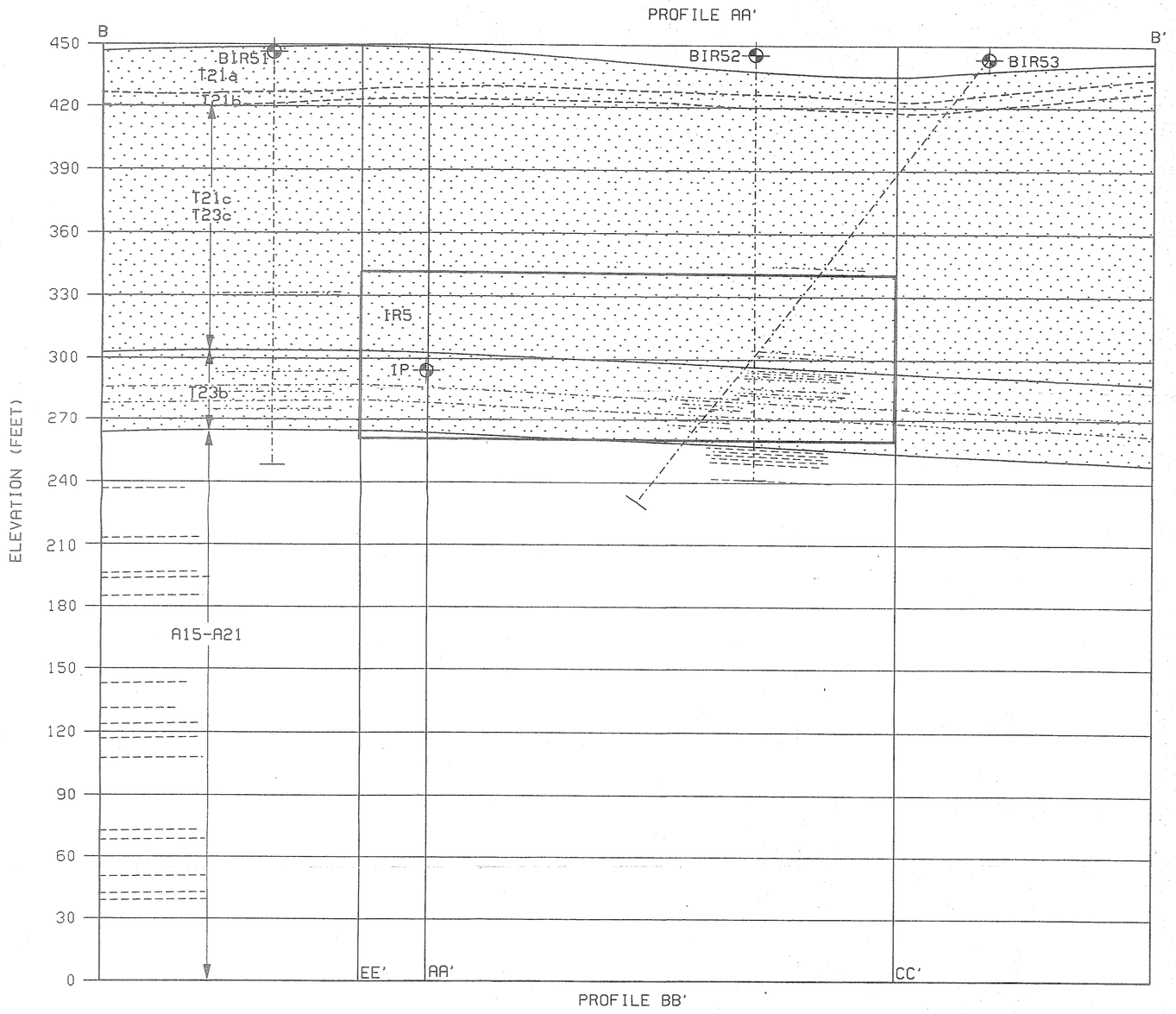

PROFILE BB'

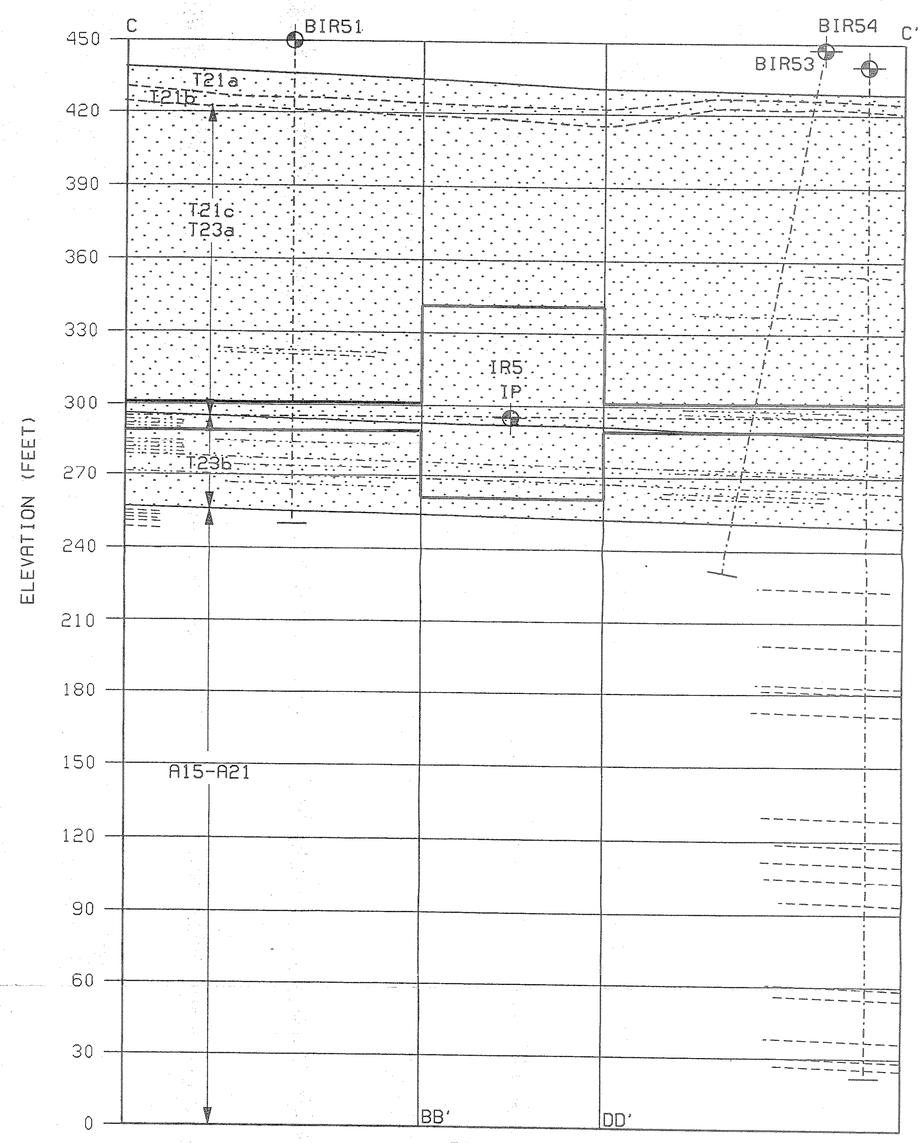

PROFILE CC'

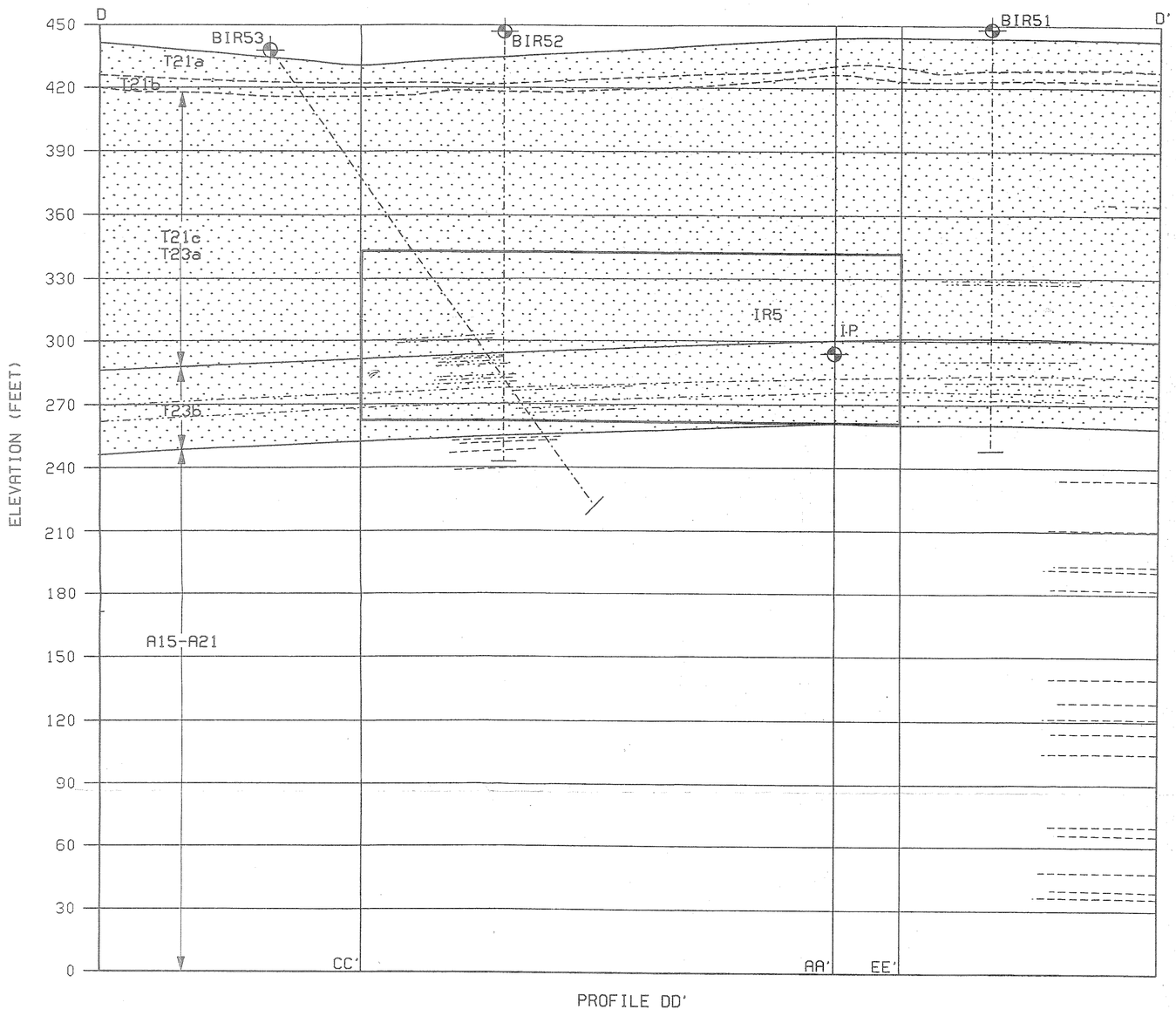

PROFILE DD'

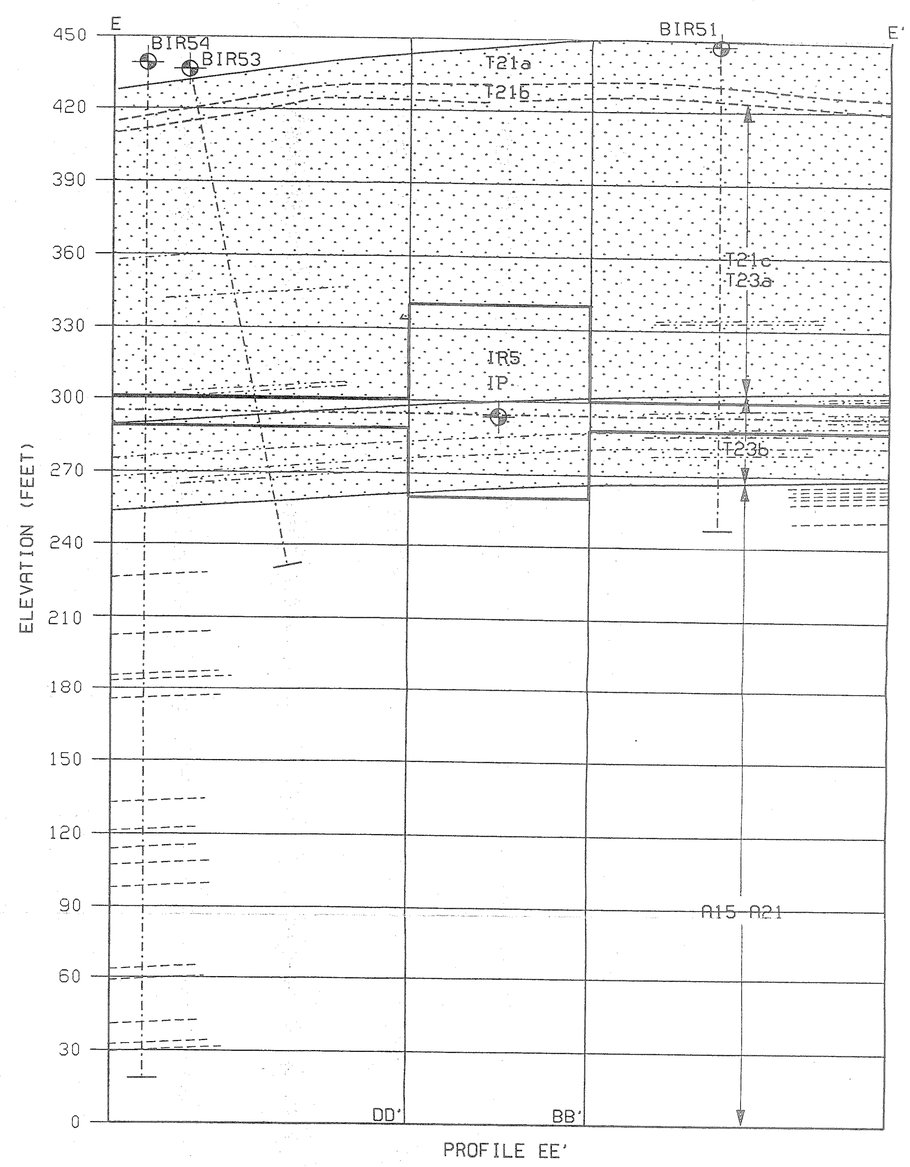

PROFILE EE'

SYMBOL	LITHOLOGY
T21a	SEVERELY WEATHERED TAYLOR MARL; TAN TO MEDIUM BROWN CLAY, MODERATELY TO HIGHLY PLASTIC, SLIGHTLY OXIDIZED WITH PERVASIVE OCHRE MOTTLING ALONG REMANENT BEDDING PLANES AND FRACTURES. GYPSUM CRYSTALS ARE COMMON ALONG FRACTURES AND BEDDING PLANES. DESICCATION CRACKS ¼ TO 2 INCHES WIDE ARE COMMON AND EXTEND TO A DEPTH OF APPROXIMATELY 2.5 FEET. SOIL THICKNESS RANGES FROM 4.5 FEET AT THE TRENCHES TO APPROXIMATELY 24.5 FEET IN THE BORINGS.
T21b	WEATHERED CALCAREOUS SHALE(TAYLOR MARL); MODERATELY TO HIGHLY WEATHERED, MOTTLED BLUISH-GRAY AND TAN, SOFT TO VERY SOFT, SLIGHTLY TO MODERATELY CALCAREOUS SHALE WITH OCCASIONAL INTERBEDS OF THIN TAN CLAY LAYERS ¼ TO ½ INCH THICK. WEATHERED ZONES RANGE FROM 3.1 TO OVER 18 FEET THICK. INCLUDES WIRE-LINE UNIT A21.
T21c T23c	CALCAREOUS SHALE(TAYLOR MARL); SOFT TO MEDIUM HARD, MODERATELY CALCAREOUS, DARK GRAY, SLIGHTLY FOSSILIFEROUS WITH OCCASIONAL INTERBEDS OF MEDIUM HARD LIMESTONE BEDS ⅛ TO ¼ INCH THICK. LIMESTONE INTERBEDS ARE MORE COMMON TOWARD THE BASE. INCLUDES WIRE-LINE UNITS T21 TO T23(TOP).
T23b	CALCAREOUS SHALE(TAYLOR MARL); SOFT TO MEDIUM HARD, MODERATELY CALCAREOUS, DARK GRAY, SLIGHTLY FOSSILIFEROUS SHALE INTERBEDDED WITH NUMEROUS THIN TO VERY THIN LIMESTONE BEDS ⅛ TO 1 INCH THICK SPACED LESS THAN 1 INCH TO ABOUT 30 INCHES APART. CONTACT WITH UNDERLYING CHALK IS VERY SHARP. INCLUDES WIRE-LINE UNIT T23.
A15-A21	LIMESTONE(AUSTIN CHALK); MEDIUM HARD, SLIGHTLY FOSSILIFEROUS, LIGHT GRAY TO DARK GRAY, CHALK INTERBEDDED WITH ARGILLACEOUS LIMESTONE BEDS 0.2 TO 1.3 FEET THICK WITH THE MAJORITY OF THE ARGILLACEOUS BEDS 0.4 TO 1.0 FOOT THICK. CHALK BEDS RANGE FROM 2 TO OVER 10 FEET THICK. INCLUDES WIRE-LINE UNITS A15 THROUGH A21.

GEOMECHANICAL CHARACTERISTICS

SYMBOL		MOIST. CONT. %	DRY DEN. (PCF)	SPEC. GRAV.	ATTER. LIMITS LL	ATTER. LIMITS PI	CARBON CONT.	UNIAXIAL COMP. STRNGTH. (PSI) *	TANGENT MODULUS E 50 (PSI)x10E5 *	POISSON'S RATIO *	BRAZIL TEN. STRNGTH. (PSI) *	SLAKE DURB. INDEX (%)	TABER ABRAS. HARD. INDEX	SWELL PRES. INDEX (PSI)
T21a	MINIMUM	20.9	94.7		55	33								
	AVERAGE	24.5	100.8		62	38								
	MAXIMUM	28.7	105.9		69	43								
T21b	MINIMUM	20.2	106.5				21.6	166				72		7.2
	AVERAGE	20.9	107.1				21.6	166				72		8.1
	MAXIMUM	21.6	107.8				21.6	166				72		9.0
T21c T23c	MINIMUM	14.9	114.0	2.68	70	41	24.8	303	0.43	0.33	57	59		43.3
	AVERAGE	16.6	116.4	2.71	81	51	28.0	514	0.79	0.42	77	73		43.4
	MAXIMUM	19.8	119.7	2.73	89	57	32.1	742	1.40	0.50	89	87		43.4
T23b	MINIMUM	13.6	115.9	2.68	75	47	21.0	495	0.77	0.28	99	55		
	AVERAGE	15.6	118.0	2.71	87	56	28.2	616	1.10	0.35	98	55		
	MAXIMUM	16.8	122.4	2.73	99	65	34.4	708	1.67	0.48	98	55		
A15-A21	MINIMUM	6.9	128.4					1962	2.63		271		0.400	
	AVERAGE	10.3	131.2					2593	2.86		282		0.534	
	MAXIMUM	12.8	140.3					3213	3.10		293		0.668	

* : DO NOT INCLUDE INCLINED BOREHOLES

LEGEND

- -·-·-·-·-·- LIMESTONE BEDS IN TAYLOR MARL
- - - - - - - ARGILLACEOUS BEDS IN AUSTIN CHALK
- * FOSSILIFEROUS ZONES IDENTIFIED IN INDIVIDUAL BORINGS
- | SHEARS AND FRACTURES NOTED IN BORING LOGS. THSES ARE PROJECTED THROUGH TO CROSS SECTION ON THE BORINGS.

GRAPHIC SCALE (FEET)

30 0 30 60 90 120

NO	DATE	REVISION	BY/CHK	APP	APP	O'BASE UPDATE
1	7/31/90	GENERAL REVISION				

U.S. DEPARTMENT OF ENERGY
SUPERCONDUCTING SUPER COLLIDER

GEOLOGIC PROFILES
IR5-DO UPGRADE

RTK a joint venture — Kaiser Engineers Inc. / Tudor Engineering Company / Keller & Gannon/Knight

CONTRACT DE-AC02-85ER40230 | PROJECT 85122

DRAWING GS-7 | DATE 2/27/90 | REV 1 DATE 7/31/90 | SHEET

GEOPROIR5.DGN 21-AUG-1990 12:05

SSCL-SR-1085 (1)