26

SSCL-SR-1052

SUPERCONDUCTING SUPER COLLIDER

Tunnel Clearances and Transport Study

May 1990

RTK

a joint venture

Kaiser Engineers Inc
Tudor Engineering Company
Keller & Gannon-Knight

Prepared under URA Contract SSCL-SC-89-0006

SSCL-SR-1052

SUPERCONDUCTING SUPER COLLIDER

Tunnel Clearances and Transport Study

Jorge D. Brown
RTK
1800 Harrison Street, Oakland, CA 94612

May 1990

Prepared under URA Contract SSCL-SC-89-0006

CONTENTS

1. INTRODUCTION
2. MAGNET WAREHOUSING AND SURFACE TRANSPORT
3. MAGNET LOWERING IN HORIZONTAL POSITION
4. MAGNET LOWERING IN VERTICAL POSITION
5. MAGNET TRANSPORTER
6. AUTOMATIC GUIDANCE SYSTEM
7. TROLLEY AND BATTERY SYSTEM
8. MAGNET PLACEMENT DEVICE
9. MAGNET SUPPORT STAND
10. PERSONNEL CARRIERS
11. VEHICLE MANEUVERING AREAS
12. TUNNEL LAYOUT
13. PROTOTYPES, BIDDERS LISTS, AND SPECIFICATIONS

EXHIBITS

Exhibits appear at the end of each section.

Exhibit	Title
Exhibit 1.1	SSC Tunnel Cross Section, 27-ft Magnet
Exhibit 2.1	Truck Hauling Magnets
Exhibit 2.2	Magnet Storage and Delivery Shaft
Exhibit 2.3	Magnet Spacing in Storage
Exhibit 3.1	Magnet Lowering System in 55-ft-Diameter Shaft
Exhibit 3.2	Cableco Nylon Slings
Exhibit 3.3	American National Standard Slings
Exhibit 3.4	P&H Modified Cost Estimate for Double-Trolley Crane
Exhibit 3.5	P&H Cost Estimate for Lift Crane
Exhibit 4.1	Magnet Handling With Two-Trolley Crane in 30-ft-Diameter Shaft
Exhibit 4.2	Magnet Lowering Onto Transporter From 30-ft-Diameter Shaft
Exhibit 4.3	Magnet Lowering With Mine Hoist in 30-ft-Diameter Shaft
Exhibit 4.4	Connellsville Mine Slope Hoists
Exhibit 5.1	Magnet Transporter
Exhibit 5.2	Cryogenics Area Bypass
Exhibit 5.3	Prontow Automatic Towing Vehicle
Exhibit 5.4	Prontow Automatic Towing Vehicle Features and Specifications
Exhibit 5.5	Polyurethane Wheels Information
Exhibit 5.6	Typical Sector Schematic
Exhibit 5.7	Towing Vehicle Calculations
Exhibit 6.1	Computer Manufacturer Meets Automation Boom
Exhibit 6.2	Guidance Systems
Exhibit 6.3	Guidance Systems Continued
Exhibit 6.4	Guidance Systems Continued

EXHIBITS (Cont)

Exhibit	Title
Exhibit 6.5	Automatic Guidance for Materials Handling
Exhibit 6.6	AVG Budget Pricing
Exhibit 7.1	Roller Trays and Battery Rollers
Exhibit 7.2	American's M-1170 Scissor Lifts
Exhibit 7.3	Insul 8 Proposal for Cart Electrification
Exhibit 8.1	Bauman Four-Directional, Electric Sideloader
Exhibit 8.2	Magnet Installation Device With Dipole Magnet Isometric (Alternate A)
Exhibit 8.3	Towmotor Lift Trucks
Exhibit 8.4	Features of Towmotor Lift Trucks
Exhibit 8.5	Magnet-Lifting Device Shown in Lowest Position
Exhibit 8.6	Magnet-Lifting Device Shown in Highest Position
Exhibit 8.7	Magnet at Maximum Lift
Exhibit 8.8	Lifting Device Hydraulic Control Circuit
Exhibit 8.9	Miller Fluid Power Hydraulic System
Exhibit 8.10	Single and Double Solenoid Valves
Exhibit 8.11	Subplate Assemblies for Solenoid Valves
Exhibit 8.12	Hydraulic Wheel Drive
Exhibit 8.13	Dimensions and Mounting Data - 2000 Series
Exhibit 8.14	Dimensions and Mounting Data - 2000 Series
Exhibit 8.15	Specification Data
Exhibit 8.16	Specification Data
Exhibit 8.17	Wheels
Exhibit 8.18	Magnet-Lifting System Being Brought Into Position
Exhibit 8.19	Tunnel Cross Section, Magnet-Lifting System Being Brought Into Position
Exhibit 8.20	Tunnel Cross Section, Lifting Device Turned 90 Degrees
Exhibit 8.21	Tunnel Cross Section, Lifting Device Positioned for Lifting Magnet

EXHIBITS (Cont)

Exhibit	Title
Exhibit 8.22	Tunnel Cross Section, Magnet at Maximum Lift
Exhibit 8.23	Tunnel Cross Section, Magnet Retracted to Allow Transporter Exit
Exhibit 8.24	Tunnel Cross Section, Magnet Being Lowered into Position
Exhibit 8.25	Tunnel Cross Section, Magnet Being Aligned
Exhibit 8.26	Magnet Being Aligned
Exhibit 9.1	Magnet Support Isometric
Exhibit 9.2	Magnet Support Plan
Exhibit 9.3	Magnet Support Elevation
Exhibit 9.4	Analysis of 26-inch Diameter Dipole SSC Magnet Support Assembly
Exhibit 9.5	Analysis of 26-inch Diameter Dipole SSC Magnet Support Assembly (continued)
Exhibit 9.6	SSC 26-inch Diameter Dipole Magnet Dimensional Data for Dynamic Analysis
Exhibit 9.7	Field Measurements and Analyses of Underground Vibrations at the SSC Site
Exhibit 9.8	Displacement Linear Spectrum Site VF-1.7
Exhibit 9.9	Displacement Linear Spectrum Data Set 2 Site VF-1.7
Exhibit 10.1	Two-Passenger Vehicle
Exhibit 10.2	Buherer Inc. Three-Passenger Vehicle
Exhibit 10.3	Large Trailer and Tracking Trailer
Exhibit 10.4	Burden Carriers/Tow Tractors
Exhibit 10.5	Stockchaser/Order Picker
Exhibit 10.6	Special Vehicles
Exhibit 11.1	E Service Area Passenger Vehicle Maneuvering
Exhibit 11.2	Concrete Shield Isometric
Exhibit 11.3	Concrete Shield Walking Beam Details
Exhibit 11.4	Walking Beam Steps

EXHIBITS (Cont)

Exhibit	Title
Exhibit 11.5	ERS Rollers
Exhibit 11.6	E Service Area Magnet Delivery
Exhibit 11.7	Turning Space Requirements, Three-Passenger and Tow Vehicles
Exhibit 11.8	Turning Space Requirements, One-Passenger Vehicle
Exhibit 11.9	27-ft Magnet Turning Radius for 10-ft-Wide Passage
Exhibit 12.1	SSC Tunnel Cross Section 27-ft Magnet
Exhibit 12.2	Tunnel Cross Section During Magnet Installation

INTENTIONALLY BLANK

1. INTRODUCTION

This report updates and amplifies the report dated December 9, 1988 on the same general subject.

This report addresses the methods of storing dipole magnets at the construction site, retrieving the magnets from storage and lowering them down the construction shaft, transporting the magnets through the tunnel to their final destination, and placing the magnets on their support stands. It also covers the design criteria and the basic dimensions required for the magnet support stands. However, the method of aligning the magnets in place is not addressed in this report.

This report also covers methods of transporting personnel and tooling inside the tunnel.

This report does not cover the transportation and placement of quadrupoles, spool pieces, transformers, control cabinets, etc.

Budget estimates were obtained for the cost of most of the equipment and vehicles presented in this report; however, a complete estimate for the cost of all the equipment cannot be made until a complete utilization analysis and calculation of the number of units required is made.

The study is based on the following criteria:

a. The tunnel section will be as per Exhibit 1.1, with a 12-ft inside finished diameter and 10-ft nominal floor width.

b. Magnets will have a cryostat outside diameter of 27 inches and a vertical spacing of 87 cm.

c. All vehicles will have a maximum width of 30 inches to allow bypass at most areas in the tunnel.

d. Tunnel construction tolerance will be plus or minus 5 inches of true alignment in all directions.

e. Preliminary design of equipment was performed to the point that we can be assured of constructibility and maximum space requirements.

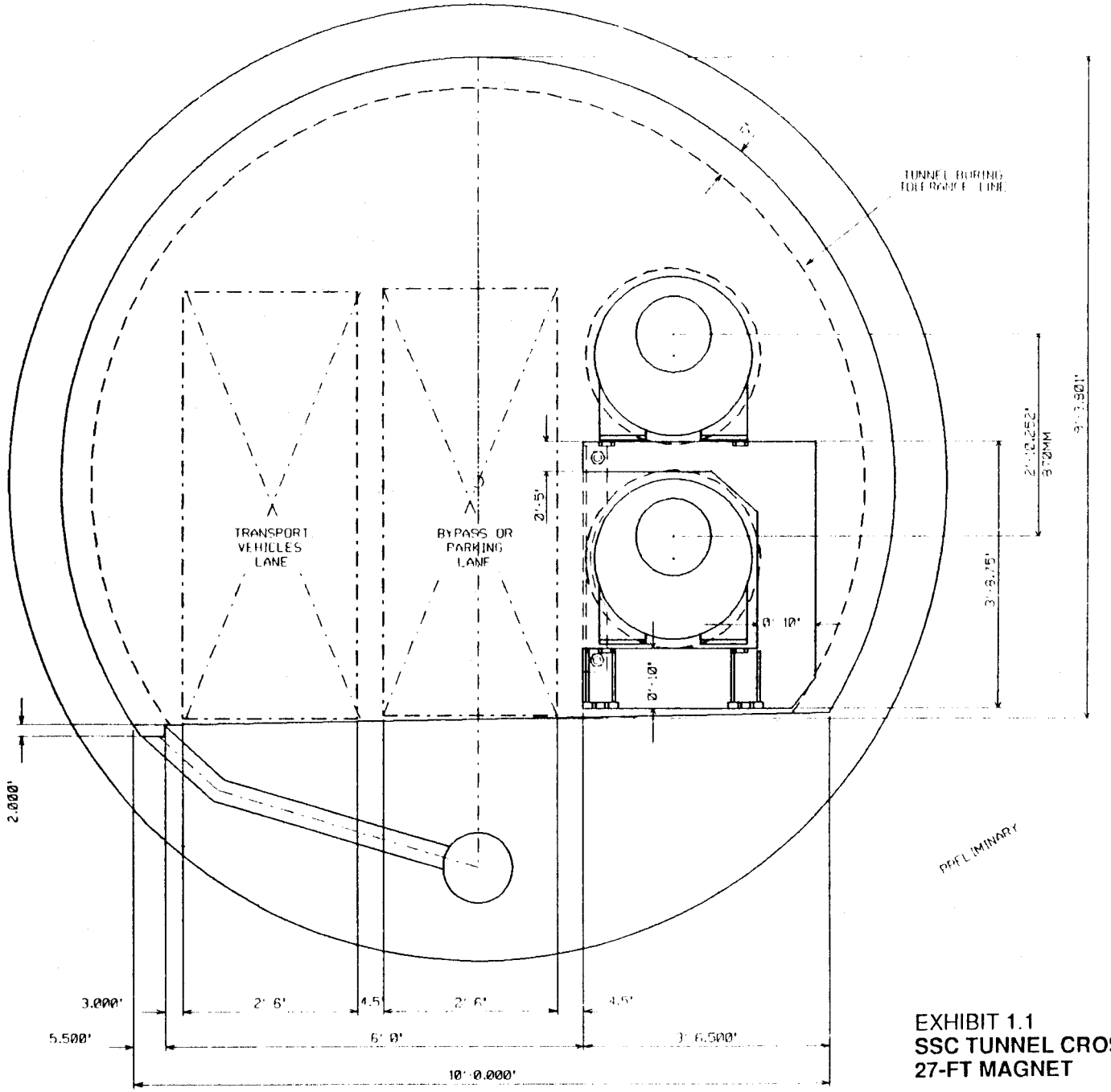

EXHIBIT 1.1
SSC TUNNEL CROSS SECTION
27-FT MAGNET

INTENTIONALLY BLANK

2. MAGNET WAREHOUSING AND SURFACE TRANSPORT

It is assumed in this study that magnets will be stored and tested in a central location and distributed to the different insertion shafts as required.

It is also assumed that no testing facilities will be available at the insertion area; therefore, it is important that magnets be transported with the utmost care from the central storage area to the insertion area. It is suggested that a special transport vehicle be designed and purchased by the Lab for this purpose.

Exhibit 2.1 illustrates a truck that could carry two magnets. This truck would have to be furnished with special magnet supports to cushion and absorb shocks and vibrations. It may be necessary to enclose the magnets and air condition the enclosure to avoid excessive heat during the summer months and also to protect them from the elements. Hatch covers would have to be provided to extract the magnets from the truck.

Assuming a 40-mile average round trip for magnet transport from the central storage place to the local shaft storage, assuming half an hour at each end for loading and unloading, and assuming an average speed of 25 miles per hour, it would take 2.6 hours to make one trip. At an installation rate of 10 magnets per day, it would take two trucks to deliver the required number of magnets in one shift.

Storage of magnets at the construction site prior to installation will be necessary. No attempt has been made in this study to quantify the number of magnets to be stored; this can only be done when manufacturing and construction schedules are more developed. It is suggested that, at a minimum, a 1-day supply be kept at the site to avoid delays caused by bad weather or other problems.

The magnets can be stored two high on their support stands, providing the support stand installation schedule does not require that all support stands be installed prior to the magnets. Other magnets could be stored one high on wooden blocks or more than one high on special racks.

A proposed storage arrangement is shown on Exhibits 2.2 and 2.3. The criteria followed is that magnets should be stored two high, at a maximum. Also the spacing between magnet stacks should be sufficient to avoid the "domino effect" in case of accident. (In Germany, a crane operator accidentally snatched one of the magnet stacks with his crane sling and magnets were damaged as some fell on others.)

Magnet storage should be indoors or under roof cover and accessible to an overhead crane. Crane unloading of trucks is preferred because the crane is required for lowering the magnets down the shaft. Also, a crane would require less aisle space and therefore less storage area.

Exhibit 2.2 also shows the 55-ft-diameter shaft, the relative location of a 6,000-lb freight elevator, and the emergency staircase. The building is shown tall enough for the overhead crane to pass over the elevator machinery housing. Thus, the crane would be able to reach the opposite side of the warehouse for handling other loads.

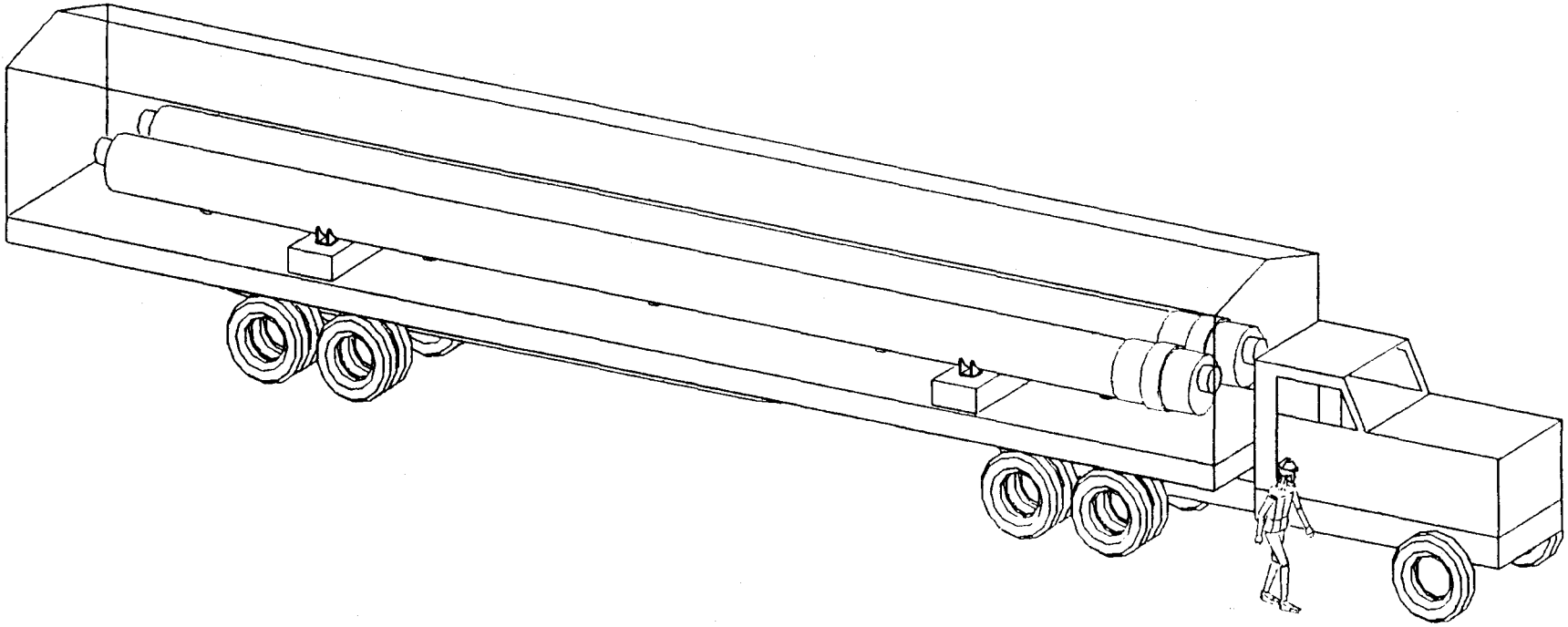

EXHIBIT 2.1
TRUCK HAULING MAGNETS

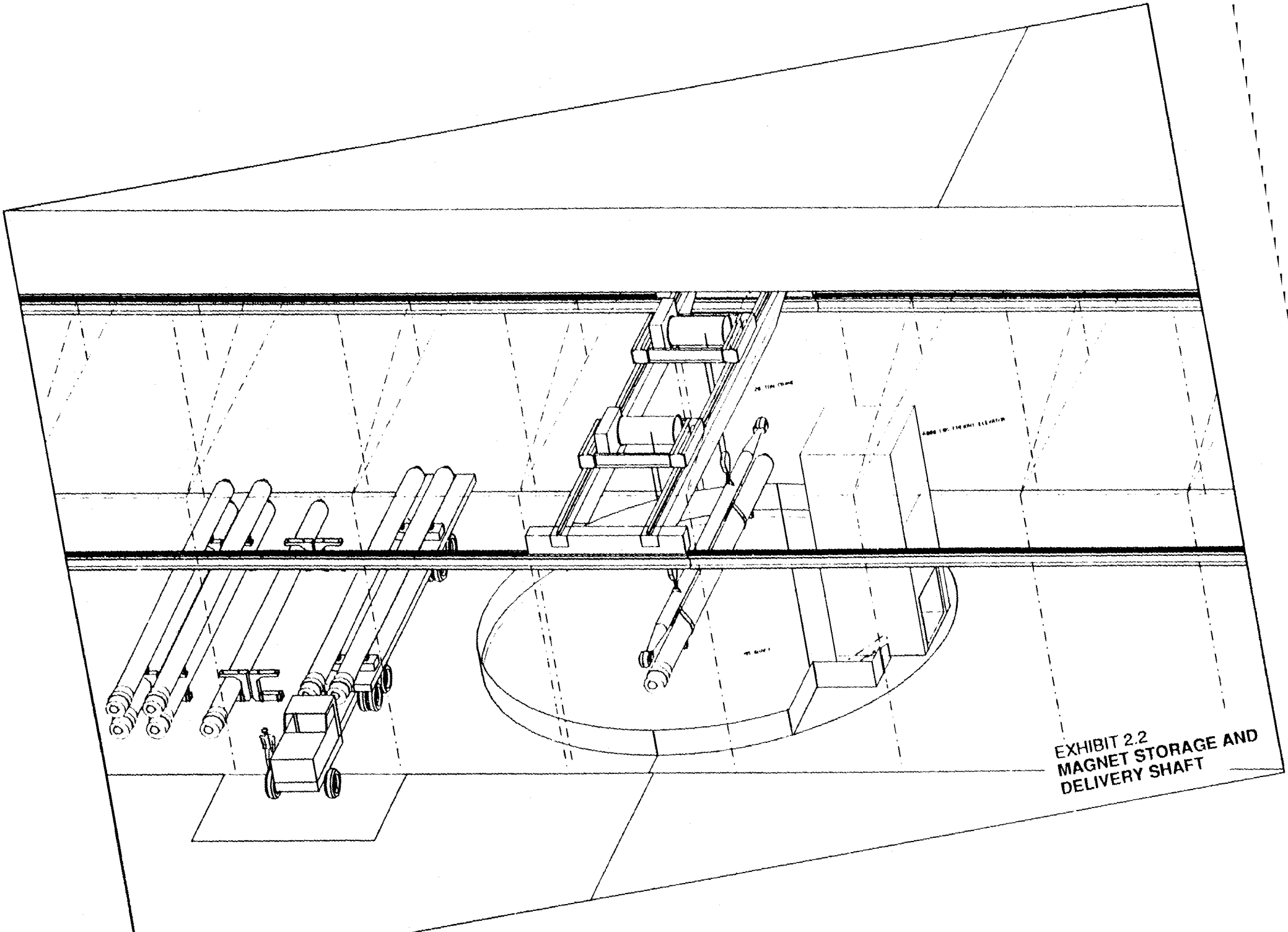

EXHIBIT 2.2
MAGNET STORAGE AND DELIVERY SHAFT

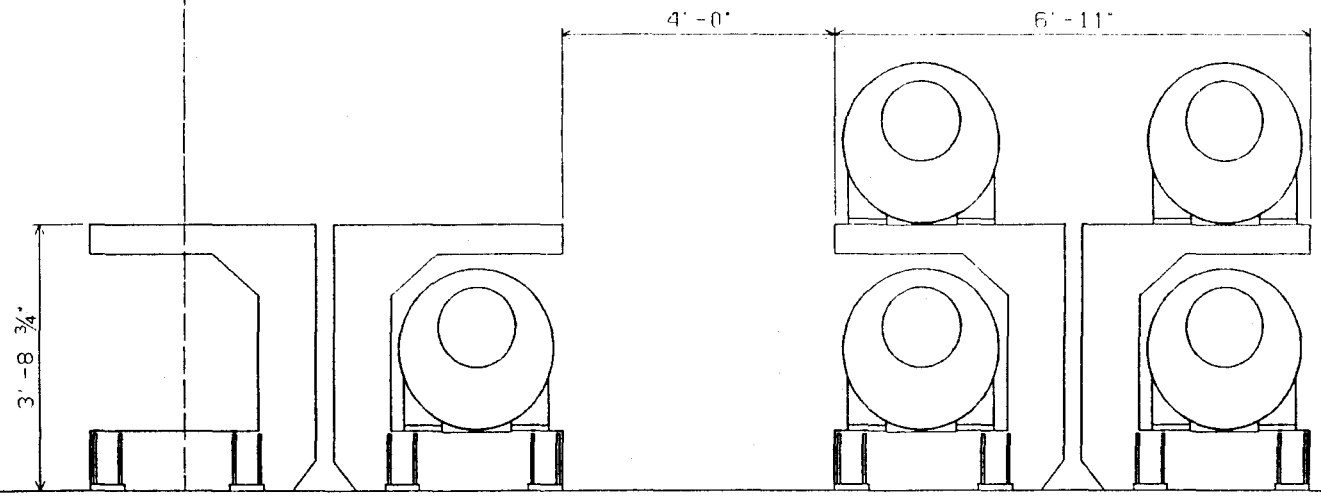

EXHIBIT 2.3
MAGNET SPACING IN STORAGE

INTENTIONALLY BLANK

3. MAGNET LOWERING IN A HORIZONTAL POSITION

Two modes of lowering the magnets have been reviewed. The first involves lowering the magnets in a horizontal position, which would demand a 55-ft-diameter shaft. The second mode explores use of a 30-ft-diameter shaft, which requires lowering the magnets in a vertical position. The 30-ft shaft is advantageous because it lowers the construction cost; however, it does increase the risk of magnet damage and would increase the cost of reinforcing the magnet internal supports. The cost of increasing the shaft diameter has been quantified and approximately estimated. The cost of reinforcing the magnets and the increased risk of damage has not been quantified.

The risk of damage arises because, if the magnets were designed to withstand 1.5 g of axial acceleration, one g would automatically be lost when upending the magnets to a vertical position, leaving only .5 g to resist starting and stopping the vertical descent or possible jerking by the crane operator. This results in an unsatisfactory safety factor or the necessity of heavy reinforcement of the magnet internal supports, with consequent problems of heat loss during operation.

Based on this risk alone, we recommend using the horizontal method of lowering the magnets. However, if more backup is required to make this decision, the technical feasibility and cost of reinforcing the magnets for a satisfactory safety factor should be evaluated against the cost of increasing the shaft diameter.

With a 55-ft shaft, the magnet handling would be simple and only one lift would be required from storage to transporter.

The proposed magnet-handling crane is pictured in Exhibit 3.1. It is equipped with two trolleys with hoists that could operate independently or be electronically synchronized to lower the magnets horizontally. The crane should be used to lower other equipment as well. Eventually a crane-utilization load factor should be calculated to see if the crane can keep up with the construction requirements, and if not, how much of the load should be shared with the freight elevator.

A strongback will be used to lift the magnets. The strongback has two purposes. When lowering magnets, baloon-type tires at both ends of the strongback will keep the magnets from swinging horizontally and rubbing against the shaft walls. The strongback can also be used to load bundles of pipe, conduit, or tubing.

The magnets will be lifted by the strongback by means of slings. Security lines will be fastened to the magnet feet to prevent them from falling in case of a malfunction. Slings are covered by ANSI and OSHA Standards in their design and usage. Representative slings are shown in Exhibits 3.2 and 3.3.

The cost of the crane was quoted by one vendor as $330,000 (see Exhibit 3.6).

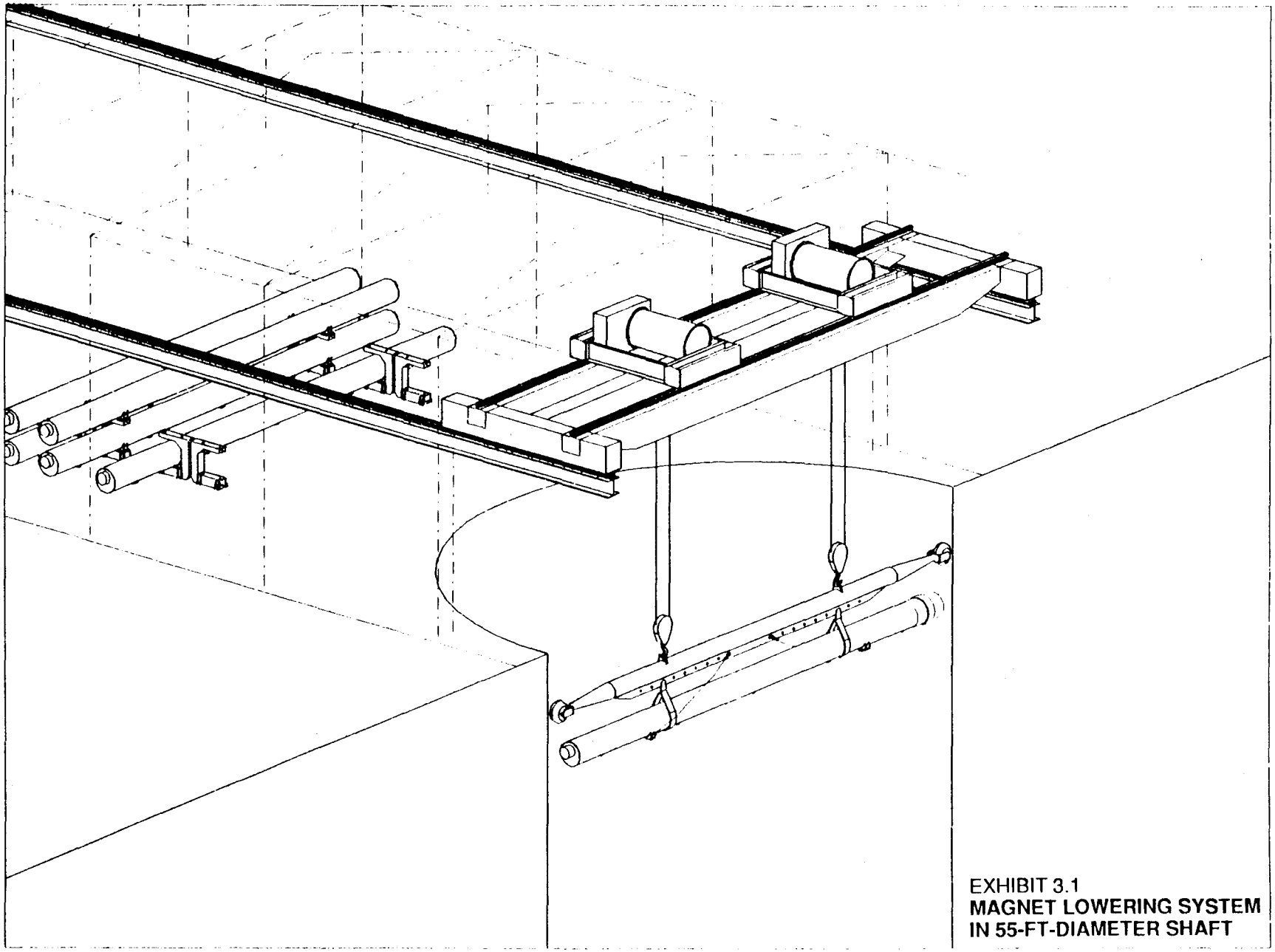

EXHIBIT 3.1
MAGNET LOWERING SYSTEM IN 55-FT-DIAMETER SHAFT

nylon slings

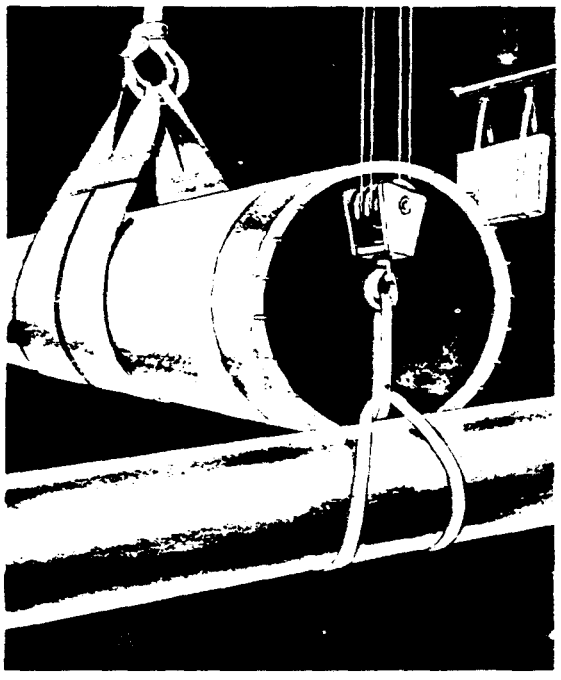

Handles, either aluminum[1] or steel[2] are specifically designed and tested to develop the full strength of the sling. Fittings are not normally recommended for 1″ width webbing but are essential for widths 6″ and over.

Slings can be treated with a neoprene solution to provide extended life and better gripping surface if required.

In addition to Samson Weave, we also have Samson Flex[3] available. Ask our engineering salesmen which is best for your needs.

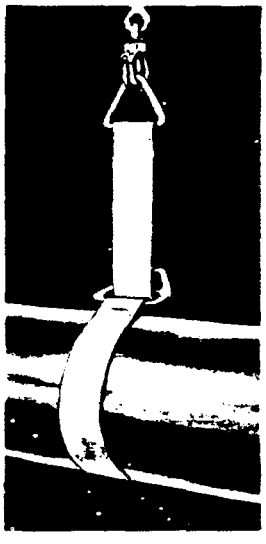

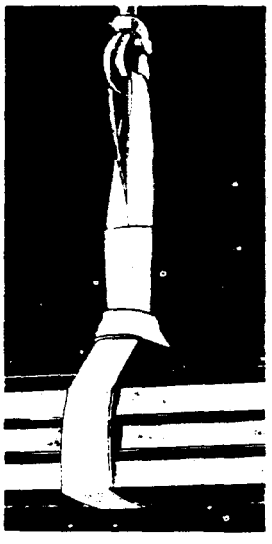

SAMSON WEAVE		WORKING LOAD LIMIT IN POUNDS FACTOR 5-1		
WIDTHS (INS.)	WT. PER FT. (LBS.)	VERTICAL[5]	CHOKER	BASKET
1	.05	1500	1000	3000
2	.10	2500	2000	5000
3	.15	4000	3000	8000
4	.20	5000	4000	10000
5	.25	7000	5000	14000
6	.30	8000	6000	16000
8	.40	10000	8000	20000
10	.50	12500	10000	25000
12	.60	15000	11000	30000
20	1.00	25000	20000	50000

NOTES: (1) Aluminum handles on slings 2″ to 6″ wide inclusive.
(2) Steel handles provided on all slings over 6″ wide and two-ply slings. Available on smaller widths on request.
(3) The use of Samson Flex increases the working load of the sling, providing cordura protection at the same time.
(4) Endless type "E" safe loads are twice the figures given for types "A", "B", "C" and "D".
(5) Every Cableco "Samson-Weave" Nylon Web Sling is proof load tested a minimum of twice this working load in a straight pull — then tagged or stencilled.

Slings of special widths, thicknesses and designs are available.

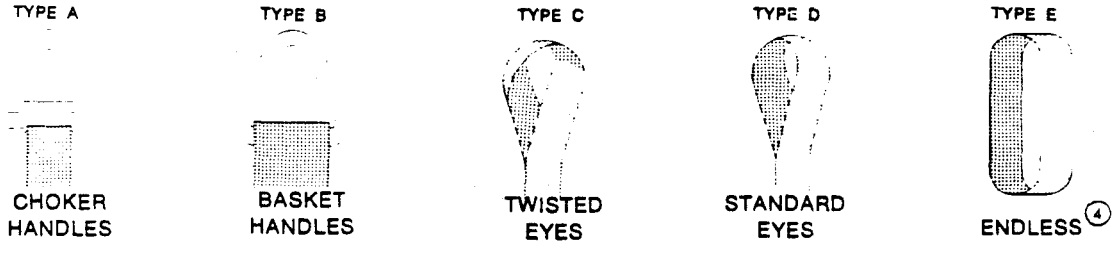

4333 MAYWOOD AVENUE **Phone 583-8671** LOS ANGELES, CALIF. 90058

EXHIBIT 3.2

TABLE 12
RATED CAPACITIES FOR CABLE LAID GROMMET – HAND TUCKED
7 × 6 × 7 AND 7 × 6 × 19 CONSTRUCTIONS IMPROVED PLOW STEEL GRADE ROPE
7 × 7 × 7 CONSTRUCTION GALVANIZED AIRCRAFT GRADE ROPE

CABLE BODY		RATED CAPACITIES, TONS (2,000 lb)		
Dia (Inches)	Constr	Vertical	Choker	Vertical Basket*
3/8	7 × 6 × 7	1.3	0.95	2.5
9/16	7 × 6 × 7	2.8	2.1	5.6
5/8	7 × 6 × 7	3.8	2.8	7.6
3/8	7 × 7 × 7	1.6	1.2	3.2
9/16	7 × 7 × 7	3.5	2.6	6.9
5/8	7 × 7 × 7	4.5	3.4	9.0
5/8	7 × 6 × 19	3.9	3.0	7.9
3/4	7 × 6 × 19	5.1	3.8	10.0
15/16	7 × 6 × 19	7.9	5.9	16.0
1-1/8	7 × 6 × 19	11.0	8.4	22.0
1-5/16	7 × 6 × 19	15.0	11.0	30.0
1-1/2	7 × 6 × 19	19.0	14.0	39.0
1-11/16	7 × 6 × 19	24.0	18.0	49.0
1-7/8	7 × 6 × 19	30.0	22.0	60.0
2-1/4	7 × 6 × 19	42.0	31.0	84.0
2-5/8	7 × 6 × 19	56.0	42.0	112.0

* These values only apply when the D/d ratio is 5 or greater where:
D = Diameter of curvature around which cable body is bent.
d = Diameter of cable body.

TABLE 13
RATED CAPACITIES FOR STRAND LAID ENDLESS SLINGS-MECHANICAL JOINT
IMPROVED PLOW STEEL GRADE ROPE

ROPE BODY		RATED CAPACITIES, TONS (2,000 lb)		
Dia (Inches)	Constr	Vertical	Choker	Vertical Basket*
1/4	6 × 19 IWRC	0.92	0.69	1.8
3/8	6 × 19 IWRC	2.0	1.5	4.1
1/2	6 × 19 IWRC	3.6	2.7	7.2
5/8	6 × 19 IWRC	5.6	4.2	11.0
3/4	6 × 19 IWRC	8.0	6.0	16.0
7/8	6 × 19 IWRC	11.0	8.1	21.0
1	6 × 19 IWRC	14.0	10.0	28.0
1-1/8	6 × 19 IWRC	18.0	13.0	35.0
1-1/4	6 × 37 IWRC	21.0	15.0	41.0
1-3/8	6 × 37 IWRC	25.0	19.0	50.0
1-1/2	6 × 37 IWRC	29.0	22.0	59.0

* These values only apply when the D/d ratio is 5 or greater where:
D = Diameter of curvature around which rope is bent.
d = Diameter of rope body.

EXHIBIT 3.3

J. DELANEY

Harnischfeger Corporation

P&H

OAKLAND OFFICE/FACSIMILE FORM

FAX TO	KAISER ENGINEERS	OAK FAX NO	(415) 635-4747
FAX NO	268-5355	FAX LOG NO	JBF
ATTN	MR. JACK DELANEY	DATE	March 5, 1990
COPY TO	KEN DUX-P&H DALLAS	PAGE	1
	JIM MAYNARD-P&H MILWAUKEE		
SUBJECT	SUPER COLLIDER PROJECT-TEXAS - 20 TON, 80 FT SPAN, 200 FT LIFT CRANE		

DEAR JACK:

I HAVE REVIEWED YOUR REQUIREMENT TO LOWER A 20 TON CYLINDER, 55' LONG, 30" DIAMETER HORIZONTALLY DOWN A 200' SHAFT WITH THE PLANT. OUR RECOMMENDATION WOULD BE TO FURNISH A 20 TON UNIT WITH TWO 10 TON HOOKS SPACED APPROXIMATELY 15' ON CENTER. REEVED TO A COMMON DRUM TO ASSURE LEVEL LOWERING OF THE LOAD THROUGH THE FULL 200'.

THE APPROXIMATE BUDGET PRICE FOR THIS CRANE, F.O.B. MILWAUKEE, WI IS..$310,000

THIS CRANE WOULD INCLUDE THE FOLLOWING:

1. MAIN HOIST 50 FPM - FULL LOAD
   MAIN HOIST 75 FPM - AT CAPACITIES UP TO 5 TON
   TROLLEY 100 FPM
   BRIDGE 200 FPM

2. P&H SMARTORQUE STEPLESS ADJUSTABLE FREQUENCY CONTROL PROVIDING 40:1

3. SMARTORQUE EXPRESS SPEED SYSTEM

4. GEARED UPPER AND LOWER LIMIT SWITCHES WITH SLOW DOWN FOR LOWER 20'

5. RADIO CONTROL WITH BACK-UP PENDANT

   THIS CRANE WOULD WEIGH ABOUT 100,000 LBS. TOTAL HORSEPOWER WOULD BE APPROXIMATELY 100 HP.

GOOD LUCK ON THE PROJECT. PLEASE LET US KNOW IF YOU NEED FURTHER INFORMATION.

VERY TRULY YOURS,
HARNISCHFEGER CORPORATION
J. B. FISCHENICH
WESTERN REGIONAL MANAGER
MATERIAL HANDLING EQUIPMENT
(415) 635-4742

JBF/jr

EXHIBIT 3.4

Harnischfeger Corporation

P&H

OAKLAND OFFICE/FACSIMILE FORM

FAX TO	KAISER ENGINEERS	OAK FAX NO	(415) 635-4747
FAX NO	268-5355	FAX LOG NO	JBF2431
ATTN	MR. JACK DELANEY	DATE	March 26, 1990
COPY TO	KEN DUX-P&H DALLAS	PAGE	1
	JIM MAYNARD-P&H MILWAUKEE		
SUBJECT	SUPER COLLIDER PROJECT-TEXAS - 20 TON, 80 FT SPAN, 200 FT LIFT CRANE		

DEAR JACK:

IN RESPONSE TO YOUR TELEPHONE CONVERSATION EARLIER TODAY, TO MODIFY THE BUDGET PRICE QUOTED IN OUR MARCH 5TH FAX TO COVER A DOUBLE TROLLEY CRANE WITH TWO INDEPENDENT TROLLEYS, REVISED PRICE F.O.B. MILWAUKEE, WI IS.....$330,000

THE OTHER FEATURES WOULD REMAIN AS PRESENTED IN THAT FAX.

VERY TRULY YOURS,
HARNISCHFEGER CORPORATION
J. B. FISCHENICH
WESTERN REGIONAL MANAGER
MATERIAL HANDLING EQUIPMENT
(415) 635-4742

JBF/jr

2-10 TON TROLLEYS ON BRIDGE

EXHIBIT 3.5

INTENTIONALLY BLANK

4. MAGNET LOWERING IN A VERTICAL POSITION

Two methods of lowering the magnets down a 30-ft shaft were analyzed:

I. The first considered a crane similar to the one described for the horizontal lowering of the magnets, but with a different strongback. In this case, the strongback would be used to hold and tilt the magnet by lowering one hook more than the other (see Exhibits 4.1 and 4.2). The crane would have to follow a complex path that could be aided by purchasing a sophisticated computer control program.

   Placing guides along the shaft walls was considered and discarded because the crane operator would have to thread the ends of the strongback on the guides while managing a swinging load that might also be subject to operator jerking and complex handling at the bottom of the shaft.

   Computer programming of path control would be safer, require less operator handling, and avoid the installation of guides along the shaft walls. The strongback would be provided with balloon-type tires inflated at low pressure to avoid rubbing the magnets against the walls.

   The magnet will be bolted to the strongback using the external supports. At the bottom of the shaft the magnet will be placed on hydraulic jacks until the strongback is detached. The jacks would then lower the magnet onto the transport bogies.

   This method would require handling the magnet three times. First the magnet has to be lifted from storage and placed and fastened to the strongback, then the strongback with the magnet has to be lowered down the shaft and placed on jacks, which in turn place it on the transporter.

II. The second method (shown on Exhibit 4.3) takes advantage of gravity and a mechanical control of the magnet and strongback along the whole path. This method has the advantage of totally automating the descent of the magnets, thereby reducing the danger of damage to the magnets. This method does, however, require rehandling the magnet three times, once by crane or forklift from storage to the lowering device, then from the lowering device to a monorail crane that in turn will lift it and place it onto the magnet transporter. The method was not pursued further because the cost of the winch alone was quoted at $300,000 (see Exhibit 4.4), plus the cost of the guides and monorail. A crane is more versatile because it may be used for other purposes as well.

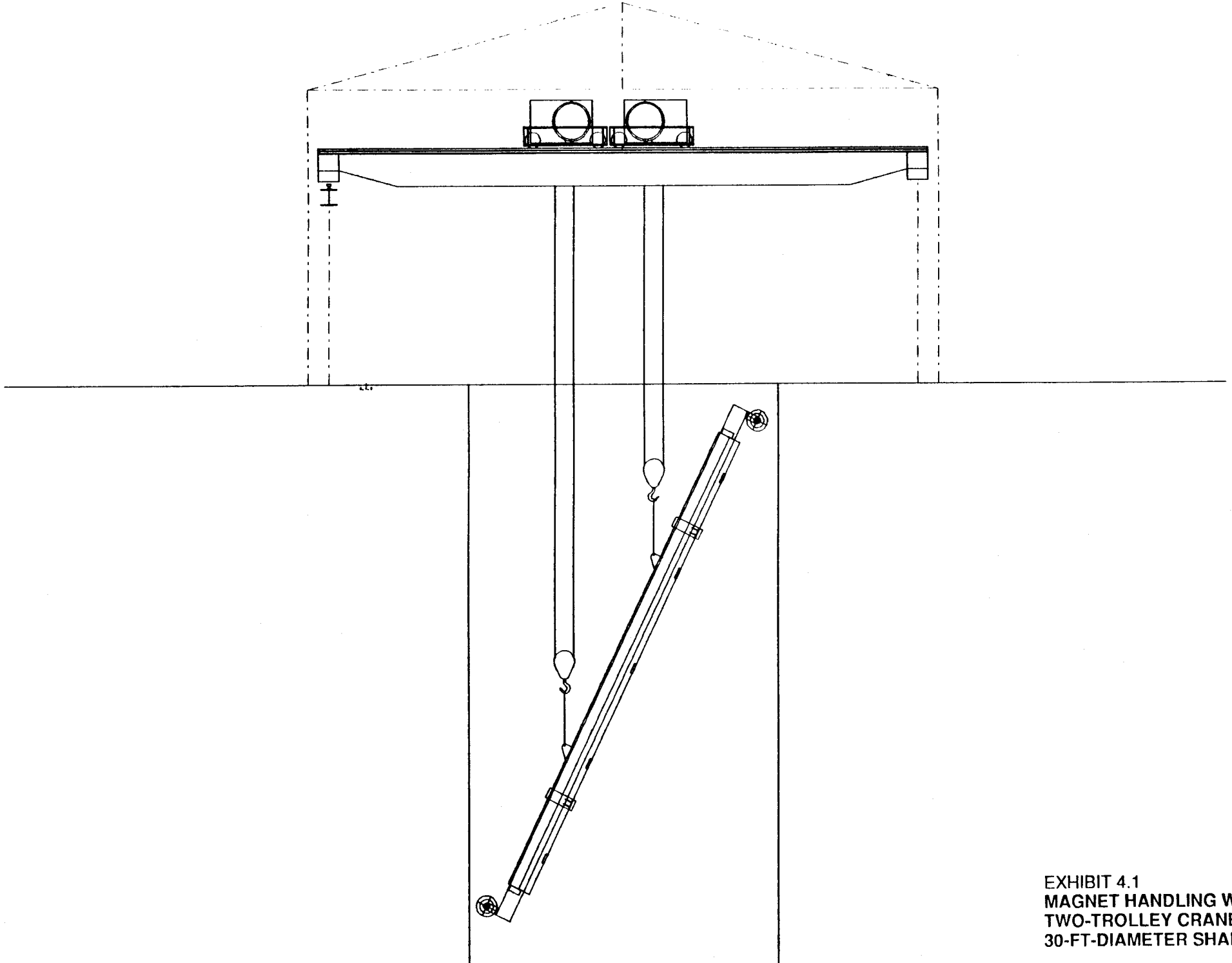

EXHIBIT 4.1
MAGNET HANDLING WITH TWO-TROLLEY CRANE IN 30-FT-DIAMETER SHAFT

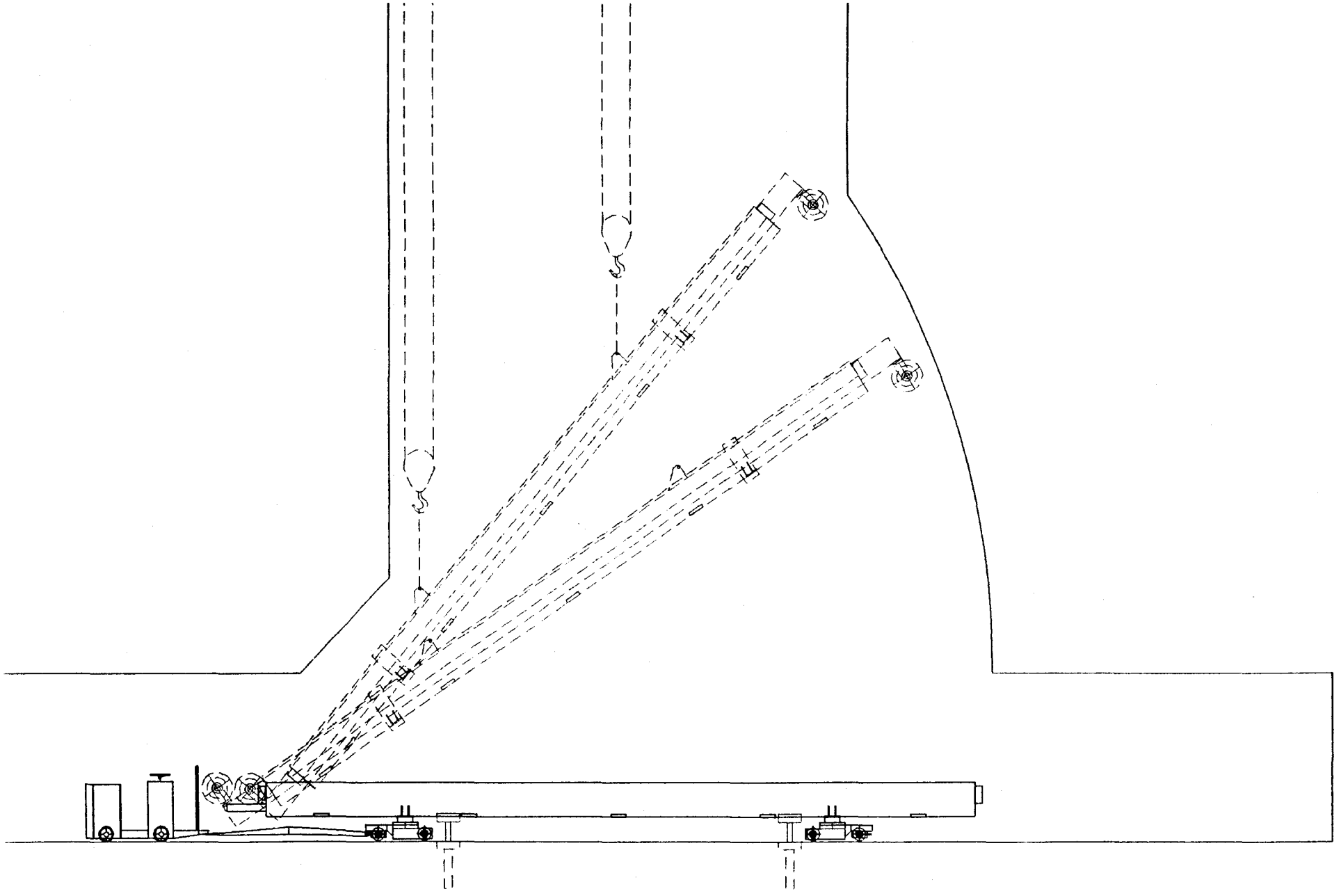

EXHIBIT 4.2
MAGNET LOWERING ONTO TRANSPORTER FROM 30-FT-DIAMETER SHAFT

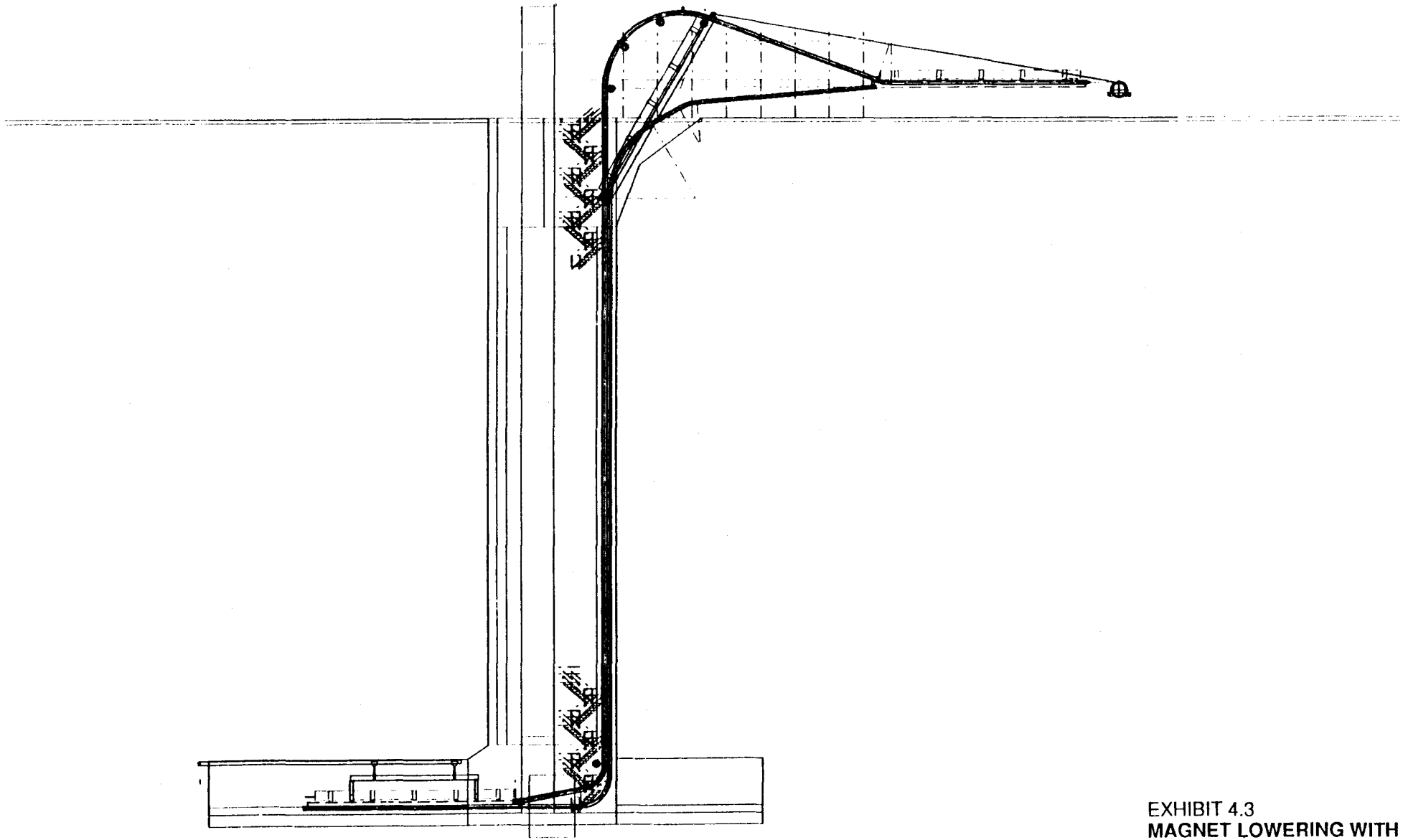

EXHIBIT 4.3
MAGNET LOWERING WITH MINE HOIST IN 30-FT-DIAMETER SHAFT

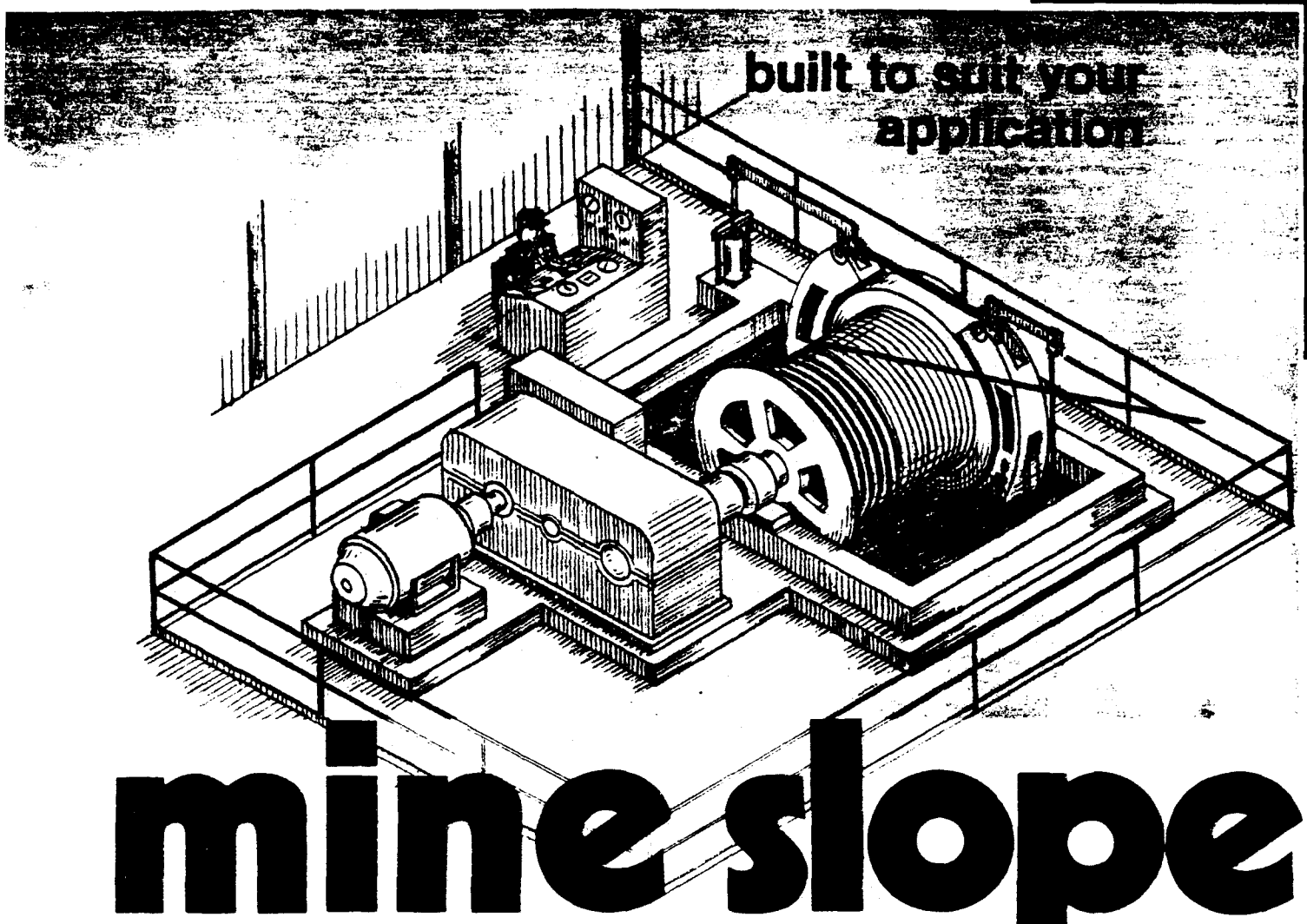

mine slope hoists

Connellsville hoists feature the most up-to-date engineering and developments.

Available for AC or DC power with manual, semi-automatic and completely automatic control systems, Connellsville mine slope hoists have an extra rugged all steel drum grooved for single or multi-layer spooling of rope. Its alloy steel forged drum shaft is firmly supported by spherical roller bearings in strong steel housings. The hoists' gear-type couplings are fully and safely guarded—gear drives are enclosed in tough steel housings. Split-type shaft seals are used throughout. Hoist base and bed plates are all steel.

Quick-acting gravity set and prime hydraulic released parallel motion post brakes operate on a ductile iron or steel brake drum. An auxiliary spring set brake is furnished on the high speed shaft for additional protection.

Standard equipment includes all required safety devices needed for monitoring speed, rate of acceleration and deceleration, brake wear and brake set and depth indication.

For the best of the past combined with the best of today to handle your present and future needs, specify Mine Slope Hoists by Connellsville—there are none better.

EST. COST = $ 300,000. +

Raising Production Since 1901

CONNELLSVILLE, PENNSYLVANIA 15425 412 / 628-8000

SKIPS • CAGES • ELEVATORS • LOADING CHUTES • ROTARY DUMPS
CARHAULS • COKEOVEN EQUIPMENT • SHAFT DESIGNS
PREPARATION PLANT EQUIPMENT

EXHIBIT 4.4

INTENTIONALLY BLANK

5. MAGNET TRANSPORTER

Several alternative magnet transporters have been investigated. Equipment found that is commercially available and designed for this purpose is too wide to fit in the space allocated. Therefore, a special design was considered that consists of a tractor with a 1,000-lb draw bar pull and two bogies that are connected to a frame by means of swivel turntables. The magnet is bolted or clamped to the frame. The tractor is connected to the forward bogie by means of a tow bar. (See Exhibit 5.1.)

The magnet transporter must negotiate sharp curves at various places. Therefore, each bogie will be independently steerable by means of hydraulic cylinders or electric actuators remotely controlled from the tractor, or automatically steered by means of an automatic guidance system described in Section 6 of this report. The principal areas for sharp curves are:

- Entering the tunnel after delivery through the 55-ft shaft. It is desirable in this area to have the automatic guidance system do the maneuvering to minimize the possibility of damage.
- Around the detector bypasses. Again, it is recommended that the automatic guidance system do the steering.
- Approaching the magnet stands for delivery. Manual steering from the control console is recommended here to avoid 5,000 switches and a very complex control system.
- Around the U tubes inside the tunnel when delivering a neighboring magnet.

To reverse direction, the tow vehicle and the draw bar will be disconnected from the bogie. The tow vehicle will travel to a turnaround niche and return, while the draw bar will be shifted to the other bogie and then be reconnected to the tow vehicle.

Details of the bogie maneuvering around cryogenics transfer areas can be seen in Exhibit 5.2.

Cost of this equipment is estimated at $50,000 for a standard tow vehicle and $50,000 for the tow bar and bogies, for a total of $100,000.

Exhibits 5.3 and 5.4, respectively, show a picture and dimensions of a typical tow vehicle. Please note that the width dimension exceeds the required 30 inches; however, we understand from the vendors that a vehicle can be designed to fit within the required width. The cost of this special design was not estimated and manufacturers contacted were not agreeable to quoting on the modifications.

Exhibit 5.5 shows a catalog page featuring polyurethane wheels that are suggested for the bogies. The wheels selected are each 12 inch x 4 inch with 6,000 lb capacity.

Exhibit 5.6 shows the basic tunnel sector dimensions used for calculations of travel distances.

The magnet transporter tow vehicle's standard speed is approximately 2 mph. The average round trip distance will be 5.4 miles and the maximum round trip distance will be 10.8 miles. Allowing 30 minutes for loading, 15 minutes for unloading, and time for vehicle turnaround, the total average cycle time would be 3.8 hours and the maximum cycle time would be 6.5 hours.

The number of transporters in service at any time will depend on the number of shifts worked, the number of hours per shift, the maximum speed allowed, etc. The least-efficient scenario is one in which magnets have to be delivered at a maximum distance from the delivery shaft, at one shift per day with 8 net working hours per day.

Remembering that transporters have to be serviced and maintained, and that batteries must be changed or recharged after every trip, it would be necessary to purchase six transporters to be able to install 10 magnets a day on an average length trip at a transporter speed of 2 mph when working one shift. When installing magnets at the extreme end, more transporters would be required, and more hours of operation or an extra shift added.

Consideration could be given to increasing the transporter speed to 4 mph or more. In this case, the number of transporters could be reduced to four. However, with the tight clearances to be negotiated in the tunnel, this is a decision that should be made after tests are conducted in the Accelerator System String Test program.

Exhibit 5.7 shows more detailed calculations of speed and horsepower.

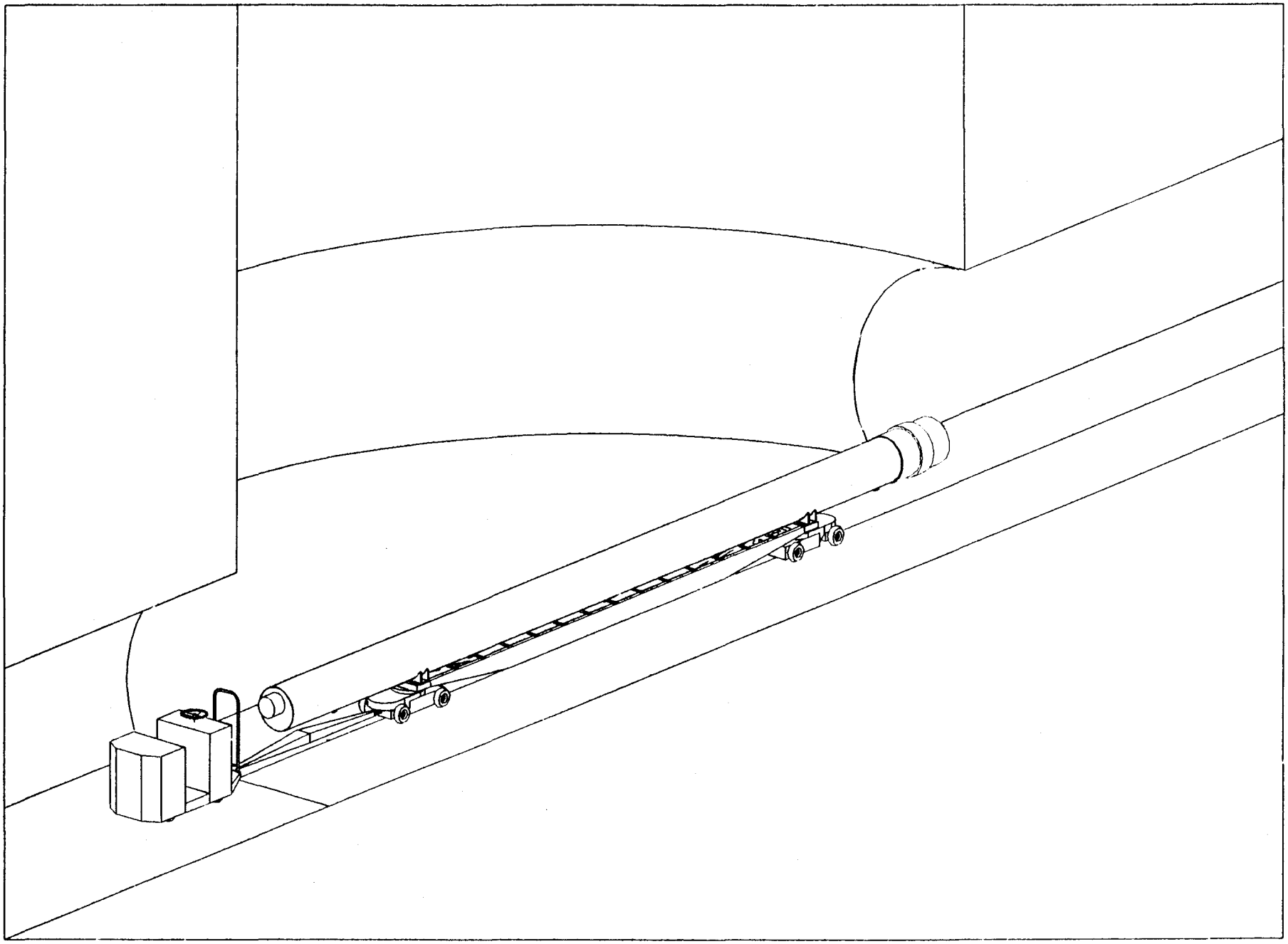

EXHIBIT 5.1
MAGNET TRANSPORTER

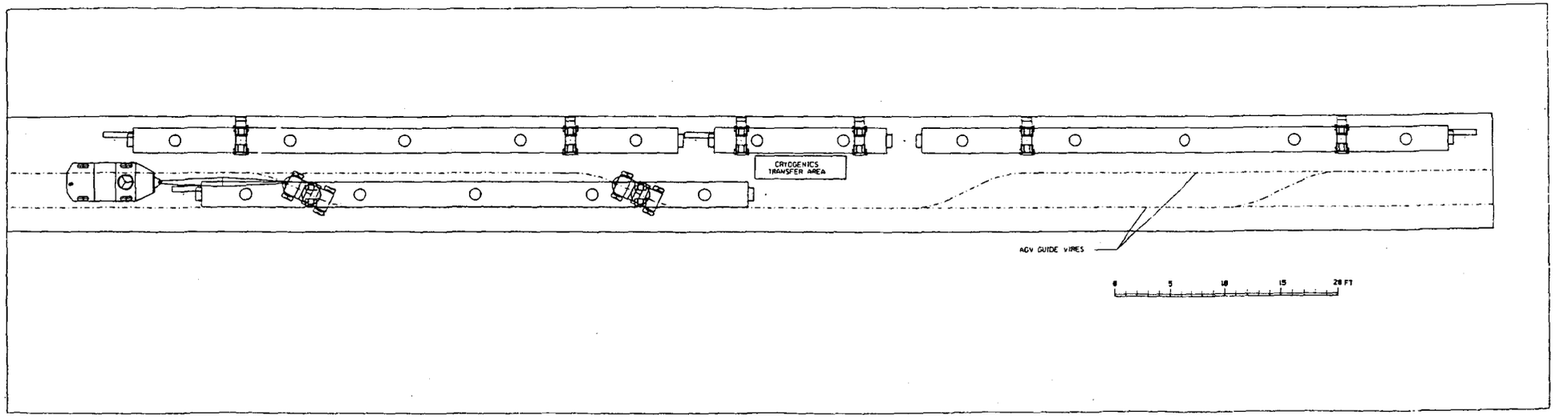

EXHIBIT 5.2
CRYOGENICS AREA BYPASS

PRONTOW

▼ ▼ ▼ 6433 ▼ ▼ ▼

AUTOMATIC TOWING VEHICLE

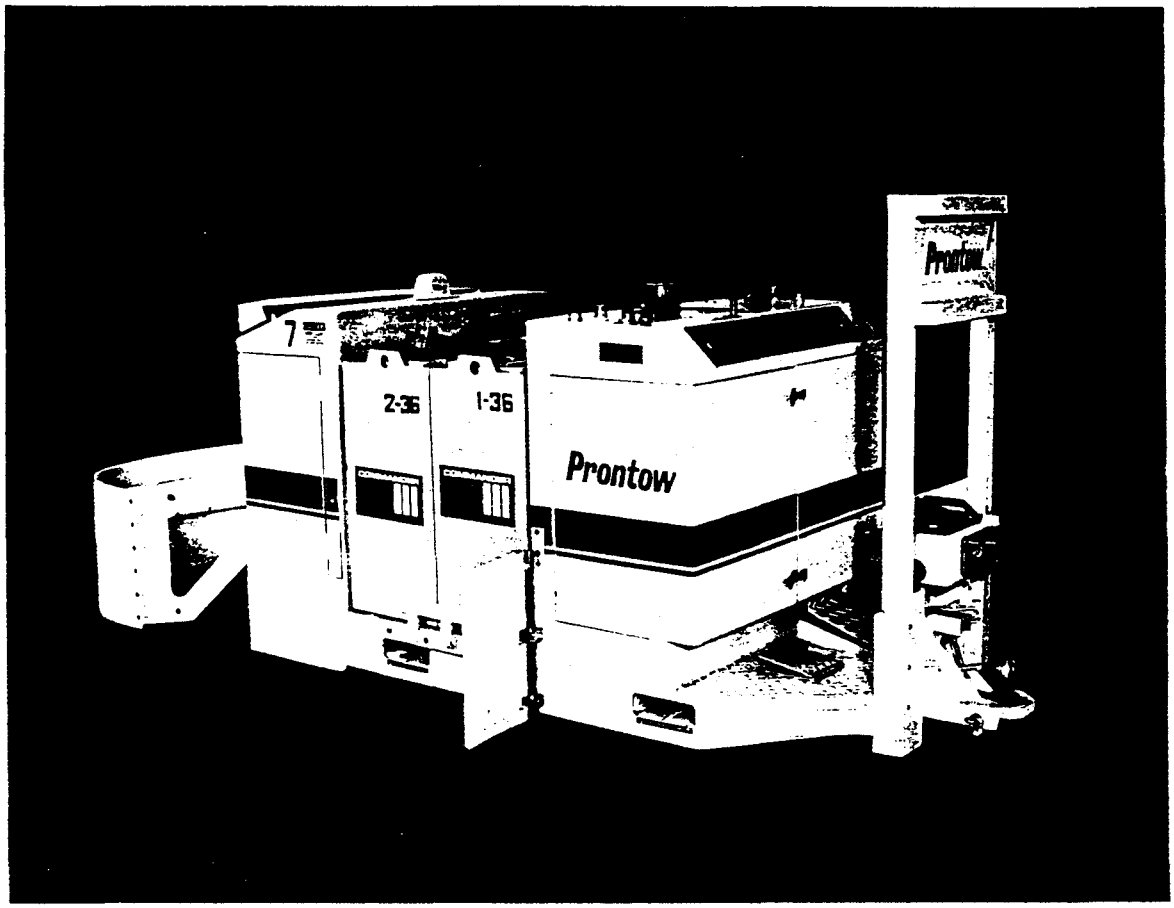

Control Engineering Company

Affiliate of Jervis B. Webb Company

▼

FEATURES

GUIDANCE SYSTEM: "Infloor" wire, five frequency capability, electromagnetic guidance.

LOCATION IDENTIFICATION: Passive transponder cards, programmable to thousands of different messages.

LOAD: Designed to tow two Prontow 6433 auto-transfer trailers.

LOAD IDENTIFICATION: Trailer presence is sensed at hitch point. Trailers interface with vehicle computer to perform load sensing.

COMMUNICATION: Half duplex FM radio, continuous bidirectional controller to vehicle communications.

LOW POWER "SLEEP" MODE: Vehicle automatically enters and recovers from power saving state to conserve battery during long idle times.

VEHICLE CONTROL, AUTOMATIC: On-board microcomputer, with 32 character, twelve mode display. Monitors over 30 vehicle functions.

VEHICLE CONTROL, MANUAL: Brake release footswitch, accelerator pedal, forward/reverse directions switch, steering wheel, horn, and two emergency stop pushbuttons.

SPEED CONTROL: Four programmed speeds between 0 and full speed, feedback controlled. Automatic acceleration ramp and controlled plugging for smooth automatic stops.

MOTOR CONTROL: General Electric EV-1 motor controller.

EMERGENCY BUMPER: Front bumper covers entire width of vehicle, and is designed to stop vehicle within bumper deflection. Failsafe optic design. Bumper extensions cover the width of the trailer.

OBSTACLE DETECTION: Optical object sensors detect obstacles in vehicle path and stop vehicle until object is removed.

DRIVE BRAKES: Failsafe, spring set, electrically released operation.

EMERGENCY FEATURES: Flashing amber beacon, horn, manual reset emergency stop pushbuttons.

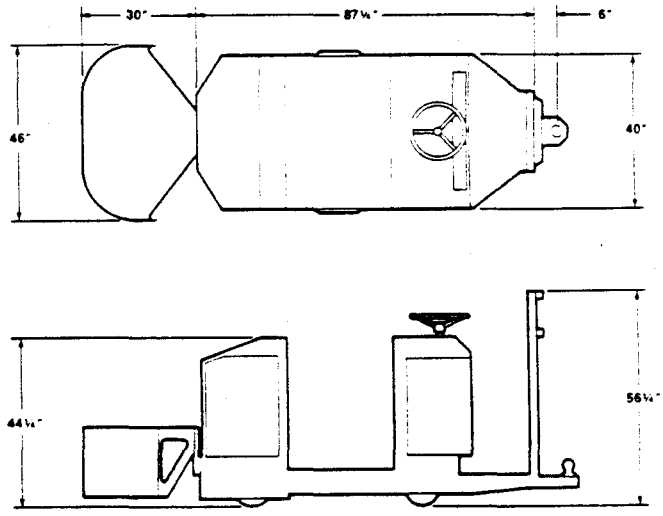

SPECIFICATIONS

NORMAL DRAWBAR PULL	1000 lb.
MAXIMUM TRAVEL SPEED, FULL LOAD (reduced in turns)	160 FPM
MINIMUM TURNING RADIUS (at reduced speed)	8 ft.
STOPPING ACCURACY (with rated load)	+/−.5 in.
EMERGENCY STOPPING DISTANCE (from rated speed)	26 in.
BATTERY CAPACITY, TYPE	72V, 600 AH
DRIVEMOTORS	(3) x 24V
GROUND CLEARANCE	2 in.
GROSS VEHICLE WEIGHT (with battery)	6200 lbs.

Performance data given is based upon specific application, and may vary with individual applications. For more information consult Control Engineering Company.

Control Engineering Company

Affiliate of Jervis B. Webb Company

8212 Harbor Springs Road
Harbor Springs, MI 49740
(616) 347-3931 FAX: 616-347-3931 x273

© 1989 Jervis B. Webb Company

Pneumatic Wheels

Light Duty Pneumatic Wheels — Capacities to 555 lbs.

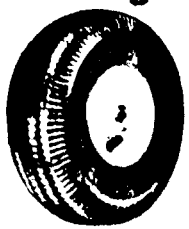

Sawtooth Tread

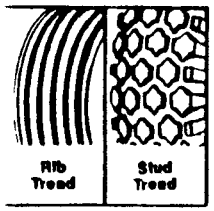

- *Ball Bearings*
- *Centered and Offset Hubs*
- *Tubeless and Tube Type*

Pneumatic tires provide maximum load cushioning and shock resistance. They are ideal for delicate and fragile loads. These wheels may be used on two-wheel and four-wheel trucks, cement mixers, industrial vacuum cleaners, and riding mowers. Can be used for off-the-road applications up to 10 mph.

All wheels are 2 ply with capacity based on 35 psi except 8353T17, 8353T21, and 8353T22 which are 4 ply with capacity based on 50 psi. Wheels have one piece drop center rims with integral hubs except 8353T23 and 8352T24 which have 2 piece split rims with separate hubs.

Wheel Size In.◆	Hub Length In.	Axle Size In.	Cap. Ea. Lbs.	No.	NET EACH 1-3	4-Up
CENTERED HUB—SAWTOOTH TREAD—TUBELESS						
8 8 2 80/2 50-4	3¼	⅝	295	8353T17	$19.39	$18.[illegible]
10 4 4.10/3 50-4	3¼	⅝	285	8353T18	21.11	17.[illegible]
10 4 4.10/3 50-4	3¼	¾	285	8353T19	21.11	17.[illegible]
12 5 4 10/3 50-6	3¼	⅝	360	8353T25	24.91	21.[illegible]
12 5 4.10/3 50-6	3¼	¾	360	8353T26	24.91	21.[illegible]
CENTERED HUB—SAWTOOTH TREAD—TUBE TYPE						
11 5 4 10/3 50-5	3	⅝	285	8353T23	23.86	20.[illegible]
11 5 4.10/3 50-5	3	¾	285	8353T24	23.86	20.[illegible]
CENTERED HUB—STUD TREAD—TUBE TYPE						
10 4 4 10/3 50-4	3	⅝	475	8353T22	36.02	30.[illegible]
10.4 4.10/3.50-4	3	¾	425	8353T21	36.02	30.[illegible]
CENTERED HUB—RIB TREAD—TUBELESS						
16 0 4 80/4 00-8	4	⅝	555	8353T27	22.77	19.[illegible]
16 0 4.80/4.00-8	4	¾	555	8353T28	22.77	19.[illegible]
OFFSET HUB—SAWTOOTH TREAD—TUBELESS						
10 4 4 10/3 50-4	2¼	⅝	250	8353T31	19.56	16.[illegible]
10 4 4.10/3 50-4	2¼	¾	250	8353T32	19.56	16.[illegible]

◆Nominal tire diameter × tire size × rim diameter.

Medium Duty Pneumatic Wheels — Capacities to 1,170 lbs.

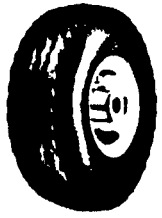

- *Ball and Roller Bearings*
- *Centered Hubs*
- *Tube Type*

These pneumatic wheels with sawtooth tread offer the greatest possible protection for both loads and floors. They are excellent for moving fragile materials and parts and delicate instruments over rough floors. Full pneumatic wheels cushion the load on air the same way an automobile or truck wheel does.

Note: Capacity is based on manual operation at 5 mph or less. Be sure tires are inflated properly as indicated in the table below.

Wheel Size In.◆	Hub Length In.	Axle Size In.	Cap. Ea. Lbs.	Air Pressure	No.	NET EACH 1-3	4-Up
BALL BEARINGS							
9 0 2.80/2 50-4	3½	½	320	100	4997T41	$30.36	$26.[illegible]
10.9 4.10/3 50-4	3½	½	530	80	4997T42	33.36	29.[illegible]
13.0 4.10/3 50-6	4½	¾	675	80	4997T43	43.28	37.[illegible]
15.1 5.30/4.50-6	4½	¾	870	60	4997T44	51.58	44.[illegible]
ROLLER BEARINGS							
9 0 2.80/2 50-4	3½	¾	320	100	4997T51	31.82	27.[illegible]
9 0 2.80/2.50-4	3½	1	320	100	4997T52	31.82	27.[illegible]
10 9 4 10/3 50-4	3½	¾	530	80	4997T53	34.81	30.[illegible]
10.9 4.10/3 50-4	3½	1	530	80	4997T54	34.81	30.[illegible]
13 0 4.10/3 50-6	4½	¾	675	80	4997T55	44.94	39.[illegible]
13.0 4.10/3.50-6	4½	1	675	80	4997T56	44.94	39.[illegible]
15 1 5.30/4 50-6	4½	1	870	60	4997T57	53.03	46.[illegible]
16 3 4 80-8	4½	1¼	1000	70	4997T58	93.18	81.[illegible]
18.4 5.70-8	4½	1¼	1170	60	4997T59	94.98	82.[illegible]

◆Nominal tire diameter × tire size × rim diameter.

Rol-King Heavy Duty Pneumatic Wheels — Capacities to 910 lbs.

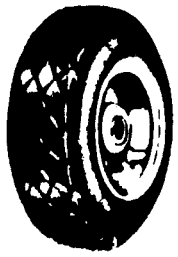

- *Ball Bearings and Tapered Roller Bearings*
- *Centered Hubs*
- *Tube Type*

Full pneumatic wheels are the ultimate in quiet, vibration-free operation. Perfect for fragile loads.

These steel wheels and hubs offer the maximum load and floor protection. All have flat-base bolted rim and integral hub, except 2334T632 (bolted hub) and 2334T652 (drop-center integral rim and hub). Limited to use on vehicles off paved areas. Capacity, mph, and psi ratings based on paved roads.

2334T722 conforms to MIL-W-8005B, which recommends that vehicle design wheel criteria be based on 75% or less of tire capacity rating considering worst conditions of use. Has aluminum hub and tapered spindle. ¾" axle size on one side and 1¼" on the other.

Wheel and Tire Size, In.◆	Hub Length, In.	Axle Size, In.	Tire Ply	Capacity & Inflation	No.	NET EACH 1-3	4-Up
BALL BEARING—Capacity based on 5 mph							
9 30 × 2 80/2.50-4	2	½	4	310 lbs. @ 100 psi	2333T512	$69.45	$64.[illegible]
9 30 × 2 80/2.50-4	2	⅝	4	310 lbs. @ 100 psi	2333T514	69.45	64.[illegible]
10 90 × 4 10/3 50-4	2	½	4	515 lbs. @ 80 psi	2333T522	74.22	67.[illegible]
10 90 × 4.10/3 50-4	2	⅝	4	515 lbs. @ 80 psi	2333T524	74.22	67.[illegible]
11 40 × 4 10/3 50-5	2½	¾	2	385 lbs. @ 40 psi	2333T531■	85.90	74.[illegible]
15 20 × 5.30/4 50-6	3	1	4	910 lbs. @ 60 psi	2333T572■	94.46	81.[illegible]
TAPERED BEARING TYPE—Capacity based on 20 mph							
9 30 × 2 80/2 50-4	2	⅝	4	230 lbs. @ 100 psi	2334T611■	92.42	81.[illegible]
9 30 × 2 80/2 50-4	2	¾	4	230 lbs. @ 100 psi	2334T612■	92.42	81.[illegible]
10 90 × 4 10/3 50-4	2	⅝	4	345 lbs. @ 70 psi	2334T621■	97.26	85.[illegible]
10 90 × 4.10/3 50-4	2	¾	4	345 lbs. @ 70 psi	2334T622■	97.26	85.[illegible]
TAPERED ROLLER BEARING—Capacity based on 50 mph							
12 80 × 4 10/3 50-6	4¾	¾	4	295 lbs. @ 65 psi	2334T632	178.19	157.[illegible]
15 20 × 5 30/4 50-6	3	1	4	585 lbs. @ 55 psi	2334T641■	112.98	99.[illegible]
16 80 × 4 80/4 00-8	5⅜	¾	4	465 lbs. @ 60 psi	2334T652	159.88	144.[illegible]
16.80 × 4.80/4 00-8	3	¾,1¼	6	570 lbs. @ 85 psi	2334T722	176.08	155.[illegible]

◆Nominal tire diameter × tire size × rim diameter. Dimensions as indicated are averages.
■Have pressure lubrication fittings.

Polyurethane Wheels

Mold-On Polyurethane Tread Wheels

Capacities to 3,115 lbs.

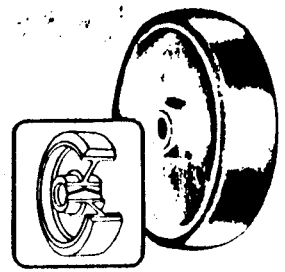

- *Roller Bearings*

These smooth rolling polyurethane wheels are as strong as steel and as resilient as rubber. They provide excellent floor and load protection and are ideal for applications requiring high capacities and rollability. **Wheels are extremely tough — highly resistant to abrasion, chipping, splitting, and attack by chemicals, oils, and solvents.**

Wheels have a hardness of 90 on a Shore A durometer. They withstand operating temperatures ranging from −40° to 210°F. All wheels have solid web cast aluminum centers, except those indicated as cast iron in the listing below. Wheels are machined for roller bearings with hub lengths to fit all standard casters. All wheels come with combination nylon grease seal/thrust washer bearing retainers. Roller bearings feature hardened rollers and outer races.

Wheels will not "set" under static loads. They have safe loading capacities 2 to 5 times greater than rubber under normal conditions. Pressure lubrication fittings and grease grooves insure proper bearing lubrication.

Other sizes available up to a 20" × 5" wheel size. Specify 2351T999, wheel size, hub length, and axle size. Prices on request.

Wheel Size In.	Hub Length In.	Axle Size In.	Cap. Ea. Lbs.	No.	NET EACH 1-7	8-Up
3 × 1	1½	½	290	2351T97●	$12.47	$10.82
3½ × 1¼	1½	½	320	2351T98●	13.66	11.86
4 × 1¼	1½	½	350	2351T99●	13.98	12.14
4 × 1½	1¾	½,¾■	675	2351T91	14.99	12.99
4 × 1½	1¾	⅝	675	2351T1	14.42	12.50
4 × 2	2 3/16	½,¾■	900	2351T92	17.49	15.08
4 × 2	2 3/16	⅝	900	2351T12	16.59	14.30
5 × 1½	1¾	½,¾■	750	2351T93	17.14	14.77
5 × 1½	1¾	⅝	750	2351T73	16.47	14.20
5 × 2	2 3/16	½,¾■	1000	2351T94	20.57	17.73
5 × 2	2 3/16	⅝	1000	2351T15	19.83	17.09
6 × 1½	1¾	½,¾■	825	2351T95	19.41	16.73
6 × 1½	1¾	⅝	825	2351T17	18.74	16.16
6 × 2	2 3/16	½,¾■	1100	2351T96	21.51	18.54
6 × 2	2 3/16	⅝	1100	2351T19	20.77	17.90
8 × 2½	2¾	1	1375	2351T2●	36.53	31.32
8 × 3	3¼	1	1650	2351T38	44.87	38.29
8 × 3	3¼	1¼	1650	2351T4	44.87	38.29

●First figure with spanner bushing furnished; second without.

Wheel Size In.	Hub Length In.	Axle Size In.	Cap. Ea. Lbs.	No.	NET EACH 1-7	8-Up
6 × 2	2 3/16	⅝	1260	2351T41	$28.31	$24.53
6 × 2	2 3/16	¾	1260	2351T23	28.31	24.53
8 × 2	2 3/16	⅞	1260	2351T42●	30.07	26.06
8 × 2	2 3/16	1	1260	2351T43●	30.07	26.06
8 × 2½	2¾	1	1575	2351T24	43.55	37.33
8 × 2½	2¾	1⅛	1575	2351T45	50.68	43.44
8 × 3	3¼	1	1890	2351T47	56.35	48.30
8 × 3	3¼	1¼	1890	2351T49	56.35	48.30
10 × 2½	2¾	1	2025	2351T53	63.32	54.28
10 × 2½	2¾	1⅛	2025	2351T54	63.32	54.28
10 × 2½	2¾	1¼	2025	2351T55	63.32	54.28
10 × 3	3¼	1	2430	2351T29	78.26	67.08
10 × 3	3¼	1¼	2430	2351T57	78.26	67.08
12 × 2½	3¼	1	2225	2351T85	69.81	60.18
12 × 2½	3¼	1¼	2225	2351T87	69.81	60.18
12 × 3	3¼	1	2670	2351T32	84.69	72.51
12 × 3	3¼	1¼	2670	2351T62	84.69	72.51
12 × 3½	4¼	1¼	3115	2351T34	109.96	94.25

●Cast iron centers.

Poly-Lok Polyurethane Wheels

Capacities to 2,250 lbs.

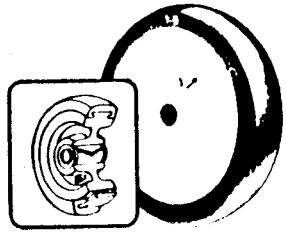

- *Delrin Bearings, Ball Bearings, or Roller Bearings*

Wheel Size In.	Hub Length In.	Axle Size In.	Gray Cap. Ea. Lbs.	Red Cap. Ea. Lbs.	Gray No.	Red No.	NET EACH 1-7	8-Up
DELRIN BEARINGS								
3 × 15/16	1	5/16	125	145	2497T21●	2497T31●	$3.09	$2.85
4 × 15/16	1	5/16	135	155	2497T22●	2497T32●	4.59	3.94
4 × 1½	1¾	½	300	400	2497T23●	2497T33●	12.84	11.01
5 × 15/16	1⅛	5/16	145	165	2497T25●	2497T35●	6.66	5.71
BALL BEARINGS								
3½ × 1⅛	1⅝	⅜	200	240	2497T41●	2497T45●	11.63	9.96
ROLLER BEARINGS								
4 × 1½	1¾	½	300	400	2497T51●	2497T71●	13.05	11.25
4 × 2	2¼	¾	380	500	2497T52●	2497T72●	15.93	13.73
5 × 1½	1 15/16	⅝	350	500	2497T53	2497T73	15.03	12.96
5 × 2	2¼	¾	450	700	2497T54	2497T74	16.29	14.04
6 × 1½	1 15/16	⅝	420	560	2497T57	2497T77	16.47	14.20
6 × 2	2¼	¾	540	820	2497T55	2497T75	18.63	16.06
8 × 3	3¼	1,1¼■	1060	2250	2497T59	2497T79	42.66	36.78
8 × 2	2¼	¾	700	1000	2497T58	2497T76	23.49	20.25
8 × 2½	2¾	1	1000	1340	2497T63	2497T83	33.21	28.63
8 × 3	3¼	1	1240	2250	2497T64	2497T84	45.18	38.95
8 × 3	3¼	1¼	1240	2250	2497T65	2497T85	45.18	38.95
10 × 2½	2¾	1	1160	1580	2497T66	2497T86	39.69	34.22
10 × 3	3¼	1	1480	2250	2497T67	2497T87	58.14	50.12
10 × 3	3¼	1¼	1480	2250	2497T69	2497T89	48.14	50.12
12 × 3	3¼	1	1700	2250	2497T69	2497T89	67.41	58.11

●Furnished without pressure grease fitting.
●First figure is with spanner bushing furnished; second is without.

Polyurethane tread is molded around and through a polyolefin core to give these wheels excellent strength and shock resistance. This bond gives better tread-to-core locking than aluminum or cast iron core wheels.

Ideal for wet conditions—will not absorb water, soaps, most acids and chemicals. Core resists oxidation in corrosive conditions and will not pit. Crown contoured nonmarking treads allow smooth rolling and swiveling. Withstand temperatures from −20° to +220°F. Not recommended for continuous motorized operation with high heat buildup. Gray treads have a hardness of 8[illegible] and red treads measure 95 on Shore A durometer.

Super Capacity Mold-On Polyurethane Wheels

Capacities to 6,000 lbs.

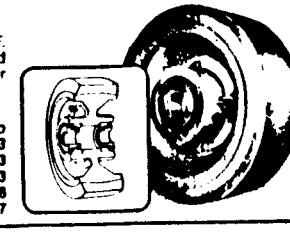

- *Tapered Roller Bearings*

Ideal for power towing at limited speeds. Nonmarking, impervious to oil, grease, ozone, and most solvents. Temp. −50° to 200°F. 1" thick treads bonded to solid web drop-forged steel centers. Lubrication fittings, tapered roller bearings. Rate 95 on Shore A durometer.

Wheel Size, In.	Hub Length, In.	Axle Size, In.	Cap. Ea. Lbs.	No.	NET EACH 1-5	6-Up
8 × 3	3¼	¾	3500	2505T71	$158.46	$137.33
8 × 3	3¼	1	3500	2505T72	158.46	137.33
8 × 3	3¼	1⅛	3500	2505T73	158.46	137.33
10 × 4	4¼	1¼	5000	2505T74	235.56	205.16
12 × 4	4¼	1¼	6000	2505T75	294.81	256.77

For general wheel and caster information, refer to page 385.

EXHIBIT 5.5

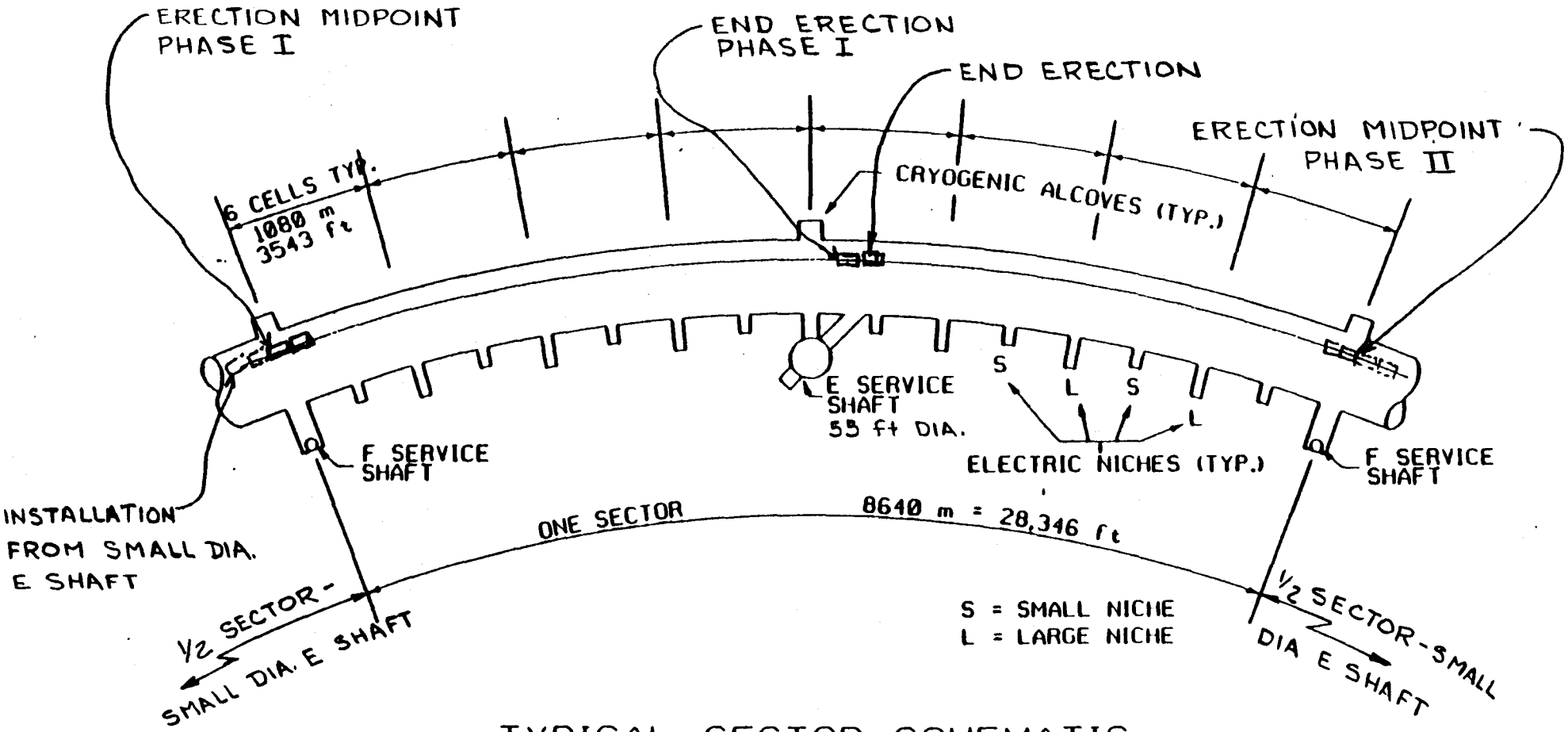

TYPICAL SECTOR SCHEMATIC

INSTALL FROM EXTREMITIES (SMALL DIA E) TO 55' DIA SHAFT TO AVOID MAGNET TRAFFIC PAST ERECTION CREWS. THIS CONFINES MAJOR TRAFFIC TO OPEN AREAS

TOW VEHICLE REQUIREMENTS PG 4A

EXHIBIT E.C.

EXHIBIT 5.7

TOW VEHICLE CALCULATIONS

HORSEPOWER

Assumptions:

Tow train weight	48,000 lb		
Transporter speed	2 mph	=	176 fpm
Running friction	0.02		
Starting friction	0.05		
Drive train efficiency	0.85		
Battery voltage	36		
Battery use before recharge	80%		

Calculations:

Running HP for loaded vehicle = $\frac{48{,}000 \times .02 \times 176}{33{,}000 \times .85}$ = 6.02 hp

Starting horsepower = .05/.02x6.02 = 15.06 hp

ROUND TRIP CYCLE TIME

Assumptions:

Average travel distance:	14,173 ft
Maximum travel distance:	28,346 ft
Average travel to turnaround:	1,771 ft

Operations Description:	Average time
1. Tow train picks up magnet at 55-ft E shaft	7 min
2. Tow train travels to installation location	81 min
3. Operators position and uncouple tow train	5 min
4. Operators unbolt and lift magnet	5 min
5. Driver recouples tow train and drives off 100 ft	5 min
6. Operators place magnet on stands; tow train uncouples, travels to niche, and returns	22 min
7. Driver recouples tow train	4 min
8. Driver returns to E shaft	81 min
9. Driver uncouples, makes U-turn, and positions for new cycle	8 min
Total =	218 min

INTENTIONALLY BLANK

6. AUTOMATIC GUIDANCE SYSTEM

Vehicles traveling along the tunnel will have minimum clearance to bypass each other or bypass construction, welding, or testing equipment. For this reason, consideration was originally given to installing metal curbs and mechanical guidance systems.

Curbs and mechanical guidance systems are problematic because they get in the way, especially in niches and tunnel bypasses. The problem can be solved by providing vehicles with an automatic electronic guidance system. An electric wire, carrying several different frequencies, would be buried on the concrete floor. Sensors on the vehicles would then follow these wires by means of a servo system controlling the steering system, allowing the vehicles to be automatically steered or remotely controlled.

Exhibits 6.1 through 6.5 present vendor literature that illustrates the available systems and the amount of flexibility and control that can be achieved with automated guidance systems (AGS).

A wire carrying several frequencies, around 4 to 12 MHz and 36 volts, is buried in the concrete by cutting a groove 1/8-inch wide x 1/2-inch deep and filling it with epoxy filler. RF generators would be required approximately every 3,000 ft. They could be mounted at each niche.

In the case of the magnet transporters, the tractor and each bogie could be separately equipped with an AGS for more accurate guidance. Although the magnet transporter could be sent to its final destination by automatic pilot, a driver may be assigned to the magnet transporter for safety purposes. However, labor costs for installing 10,000 magnets are high. Based on an average of 3.8 hours per average trip, it would take 38,000 net personhours of driving time, or as much as 50,000 personhours of total driver time. At $20/hour, this means close to $1,000,000 in labor costs, which may or may not be justified.

Vehicles could be guided automatically the entire distance to their final destination or they could be guided automatically only on the through-lane, making the final destination a manual or remotely controlled operation. Costing supports the single-wire through-lane only option. There are approximately 5,000 possible destinations and two bogies per transport vehicle. This would require the installation of 10,000 switches, each used only a few times in their lifetime. Vehicles would require an operator for other duties such as inching for magnet placement, disconnecting for turnaround, etc., so no labor would be saved. Therefore, it may not be justifiable to install more than one guide wire.

The total cost for the installation of the guidance system would be approximately $2,500,000 for one lane and $6,000,000 for two lanes, plus some switches. This is a crude estimate by one vendor and is probably conservative. (See Exhibit 6.6.)

The decision to install one or two wires for guidance should be made during Accelerator System String Test operations.

Computer manufacturer meets automation boom with material handling

An automatic guided vehicle system helps Digital Equipment Corporation meet the growing demand for its products by moving printed wiring board components through a network of material handling subsystems.—by Tom Andel, associate editor

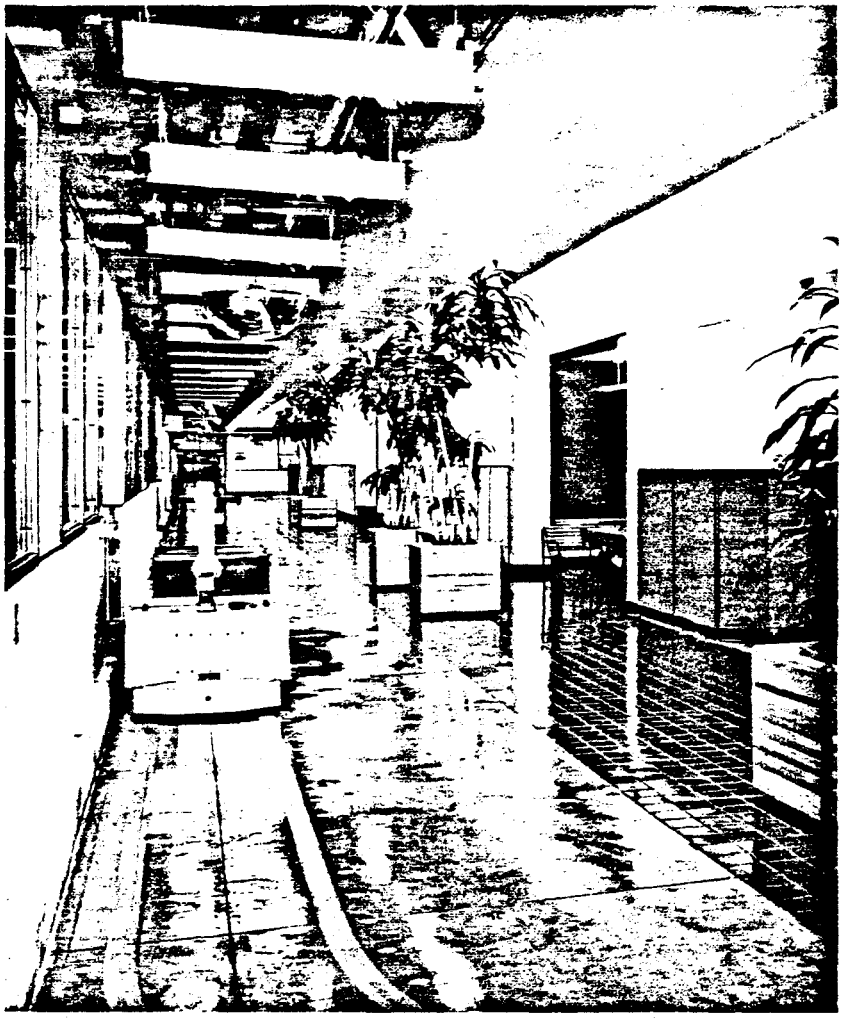

The printed wiring board manufacturing process surrounds Digital's business offices, so guided vehicles share aisles with office personnel. On-board electronic safety devices and signals insure that the vehicles stay on the wire guidepath and that pedestrians are aware of their approach.

The brain of a computer is a multi-decker sandwich of fiberglass, epoxy and several electricity-conducting ingredients, including copper, lead and gold. This multi-layer sandwich is a printed wiring board (PWB), the central nervous system that coordinates and regulates a computer's functions by providing the necessary electrical connections for message transmissions. How PWB's are made at Digital Equipment Corporation is a lesson in the art of material handling.

For the past two years, an automatic guided vehicle system (AGVS) from Control Engineering Company, an affiliate of Jervis B. Webb, has moved PWB's through a network of 11 processing subsystems, all separated by walls at Digital's Greenville, SC manufacturing plant. This year the facility will process twice as much board material as it did in 1983 - eight times 1982 production. By the end of 1986 the plant will have reached a yearly output of two million square feet.

In order to integrate this network of 11 manufacturing centers, the plant utilizes conveyors, lifts, carousels, racks, pick and place mechanisms and other material handling equipment.

These material handling subsystems must:

- Help satisfy the growing demand for multi-layer PWBs without the luxury of large work-in-process (WIP) inventories;
- Be isolated from each other by walls to conform with local fire

GUIDANCE SYSTEMS

PronTow Automatic Guidance, or SELECTRONIC Steering, can be either magnetic or optical. In both systems, steering is accomplished by electronic controls on the tractor which sense the relation of the tractor steerable wheel to a towpath on the floor. The controls sense and follow the towpath, steering automatically so as to keep the wheel centered on the towpath. SELECTRONIC Steering is so precise that the wheel stays within a fraction of an inch of the center of the towpath. It is so foolproof that, should the tractor stray too far from the center of the towpath or run off it completely, the tractor will stop immediately. It will stay stopped until it is put back on the towpath and started again.

The type of automatic steering to be used in any patricular system is determined by the number of tractors required and other factors. Magnetic guidance, which follows a wire set in the floor, is best suited for permanent towpath routes, course switching and multiple tractor use. Optical guidance, being simpler and more economical, is particularly useful where routes are changed periodically. It is not recommended for outdoor use or where keeping the towpath clean is a problem. Both systems provide accurate and reliable driverless steering, even at full speed.

Radio controlled steering is also available and requires no towpath for the tractor to follow. The movement of the tractor is controlled by a human operator equipped with a push button radio control transmitter. Radio control can also be used in conjunction with automatic guidance, stopping and starting the tractor while the automatic steering guides it along the towpath.

In automatic guidance systems, the PronTow steering servo mechanism uses magnetic particle clutches that exert the exact torque necessary to provide smooth, accurate steering over the center of the towpath wire. There is no hunting back and forth as with friction-type clutches to give jerky steering and almost continuous wear.

MAGNETIC GUIDANCE

Magnetic guidance is accomplished by means of a low frequency excited guide wire placed in a shallow groove cut in the floor. Right and left hand sensing coils on the tractor detect the magnetic field generated by the wire and pivot with the steerable wheel. Voltages from the coils are amplified and the signal level difference between the two coils is compared. The resulting difference between the sensing coils sends signals to the steering motor to steer right or steer left to center the coils (and thereby the steerable wheel) over the towpath wire.

A signal level detector measures the signal strength and permits operation only when signal strength is sufficient for guidance. The traction motor will not operate without sufficient signal strength.

Magnetic guidance is more versatile because it can be used with a Blocking system which allows more than one tractor to be used on the same

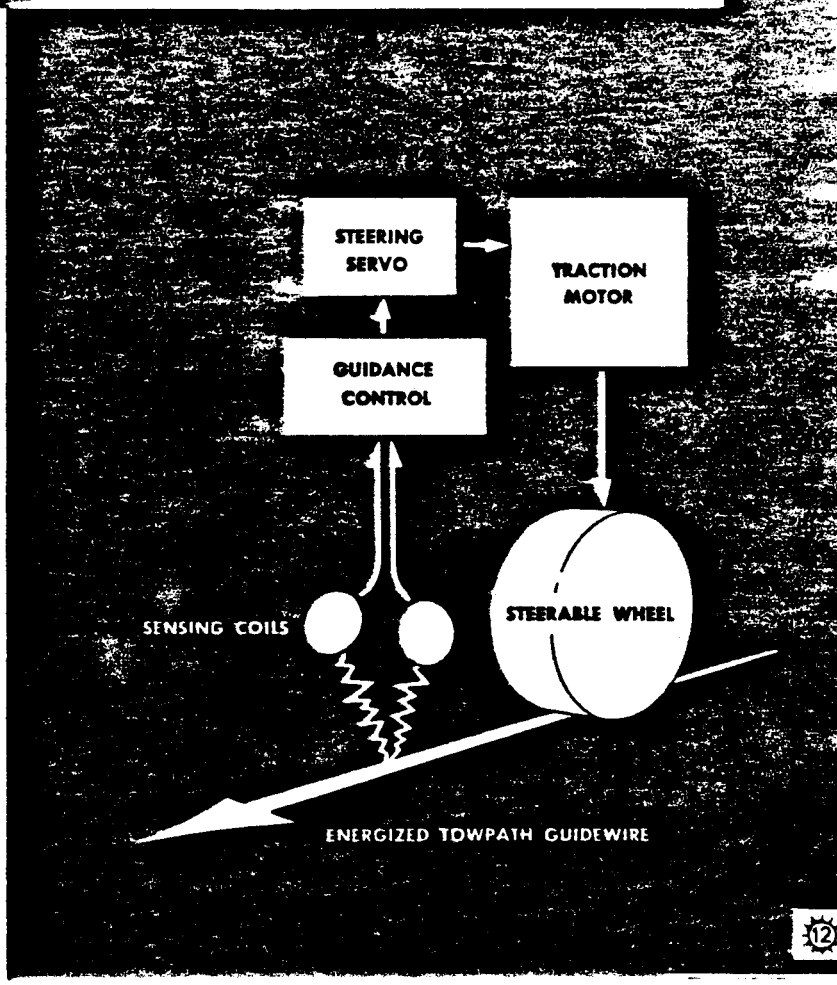

towpath without colliding. Magnetic guidance systems can also include automatic route selection, programmed stops, automatic door opening, warning light and horn sounding controls, automatic uncoupling and a number of other special applications.

OPTICAL GUIDANCE

In optical guidance the towpath is a line contrasting in color to the floor. The line can be either painted or laid down in the form of pressure-sensitive tape. Light-sensing elements on the tractor distinguish the difference between the color of the floor and the contrasting color of the paint or tape. The information provided by the light-sensing elements is evaluated for level difference and steering signals sent in much the same way as in magnetic guidance. A safety condition is recognized for both all dark or all light surfaces, such as the end of a tape or a white newspaper over the tape. When such a condition occurs, the tractor immediately stops and remains stopped until put back in operation by a human operator.

RADIO CONTROLLED GUIDANCE

Guidance by radio control allows movement of the tractor to be continually controlled by an operator in a remote location.

A compact, transistorized radio transmitter with rechargeable batteries is provided for the operator. The tractor will move forward as long as the transmitter is operating and will brake to a stop when transmission stops.

Operating the transmitter generates a signal which is transmitted via the built-in antenna. No external wires or belts are necessary. The signal is picked up by the tractor antenna and directed into a receiver having the same frequency as the transmitter. This signal operates controls that operate the traction motor.

The filter and superheterodyne circuit in the receiver insure against interference from other sources since only the particular radio frequency involved is capable of operating the tractor receiver.

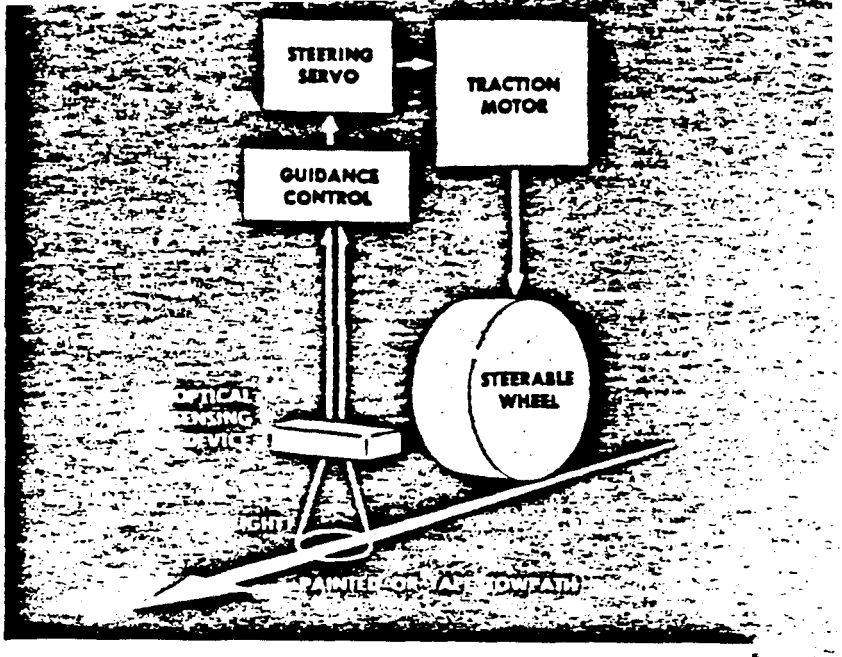

An optical guidance system can do any of the things the magnetic system can do in a single tractor system. And, optical guidance is less expensive since it requires no guide wire or amplifier. It can be installed by the customer, which makes it ideally suited for installations requiring frequent or periodic changes in routes and stops.

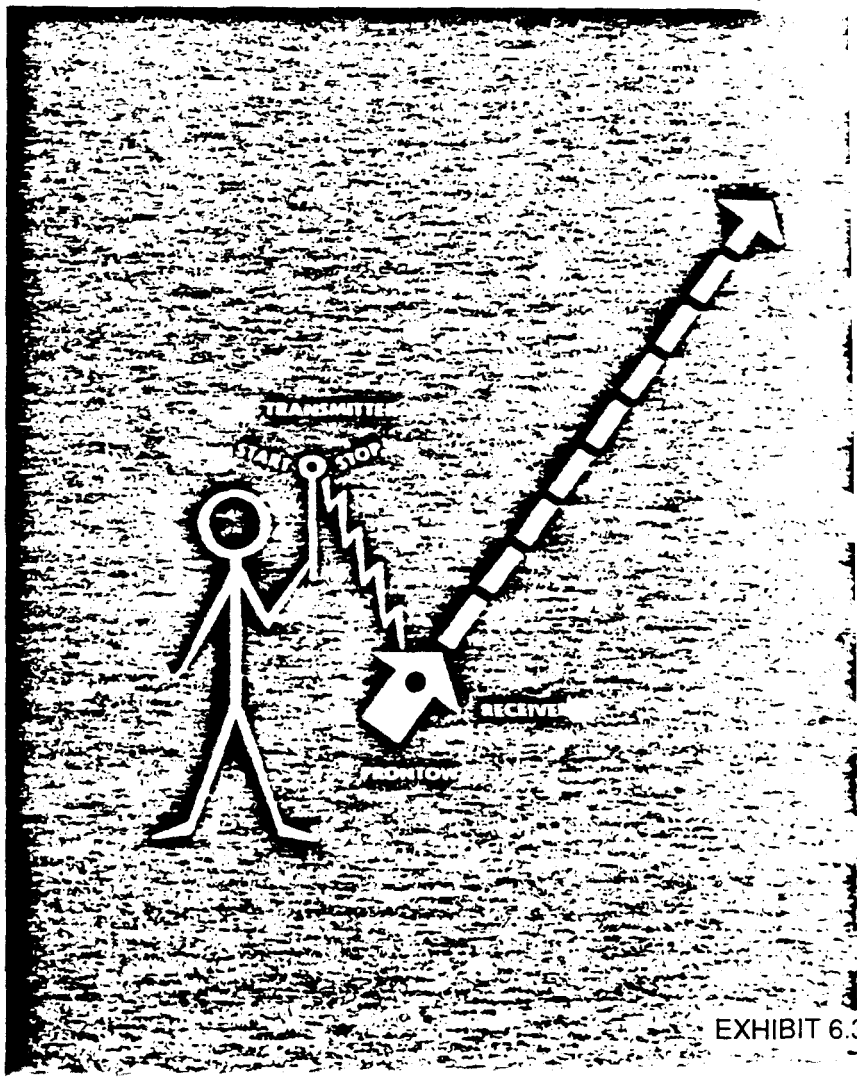

EXHIBIT 6.

STEERING UNIT

The steering module is operational as an automated or manual guide system for the tractor. The steering motor is actuated by a pick-up sensor coil which is activated by a single control wire imbedded in the floor. Directions for guidance is picked up by the sensor coil and relayed to the control panel - then to the steering motor. The use of a specially designed - dual wheel - steering unit reduces friction and strain on the motor unit by reduction of area contact on floor. The motor, the finest heavy duty, clutchless and brakeless available in conjunction with a pulse modulated drive control, enables the TigerTow tractor to respond more rapidly and track more accurately in all situations. The total steering unit has thus been engineered to assure long life and maintenance-free dependable service.

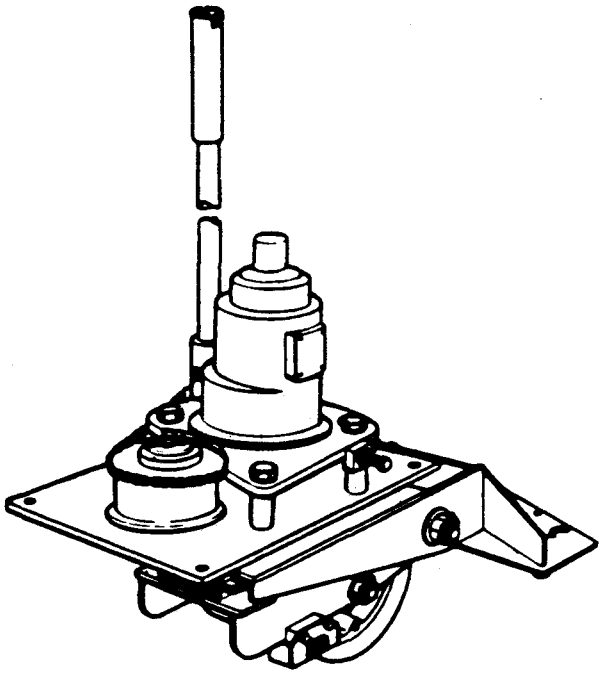

ELECTRICAL and ELECTRONIC UNITS

The Mark Series tractor is the only available unit offering a fully solid state electronic control. A manual Program Selector Panel with a see-through locking cover is conveniently located on the top - front of the tractor. The Standard program panel is equipped with toggle type switches in conjunction with the Standard programming system. The Full Random Access programming system utilizes thumb wheel selectors in the control panel. Standard programming provides 25 station stops. This panel can be expanded to meet additional station stop requirements. The use of solid state printed circuit boards allows easy installation and changing; these boards require no adjustments and are of the Go - No Go type. The boards are securely held in position by a retainer bar thus assuring proper contact and operation. An additional safety feature provided in the electrical system is a - Quick Disconnect - lever unit conveniently placed on the top of the tractor for easy access and activation, assuring an immediate - Inoperative - condition of the tractor. All electrical fuses are centrally located in a fuse compartment with a swing-up lid for easy replacement if required.

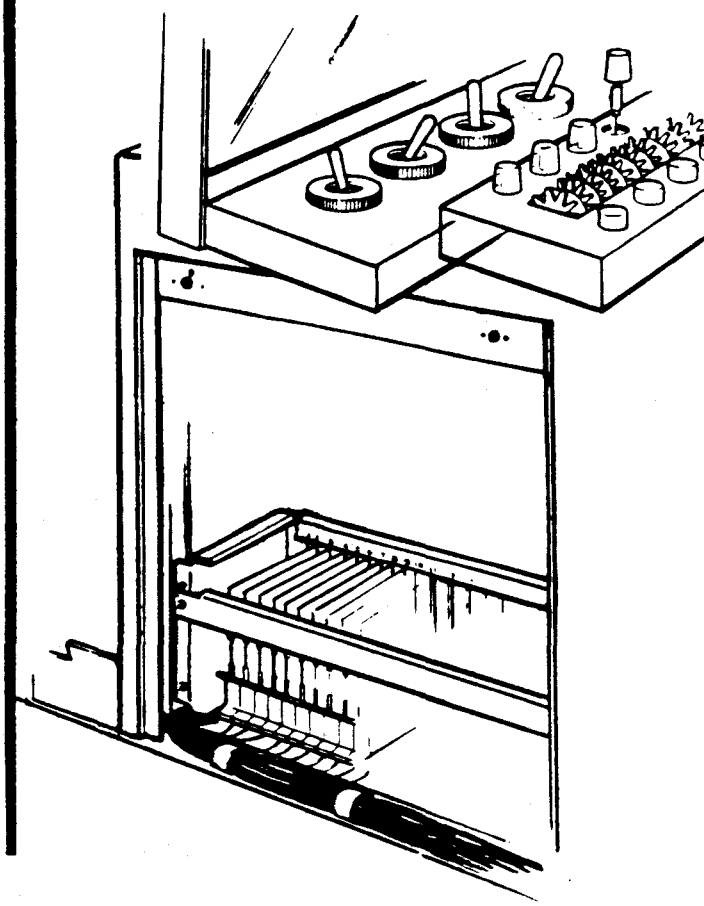

EXHIBIT 6.4

Automatic Guidance for materials handling

Since time began, human beings have conducted a never-ending search for new ways to make their work more efficient and to avoid heavy, monotonous and dangerous tasks.

Roller tables, conveyor belts and a wide variety of conveyance systems have been available for many years. And today, thanks to automatic guidance technology and systems, a new means of transportation has been making impressive headway within a broad field of applications.

The carrier can be defined as a driverless vehicle, often provided with loadhandling equipment such as roller tables, forks, clamps, grapples or the like.

They are propelled by battery-driven electric motors and have varying wheel configurations depending upon maneuverablity requirements.

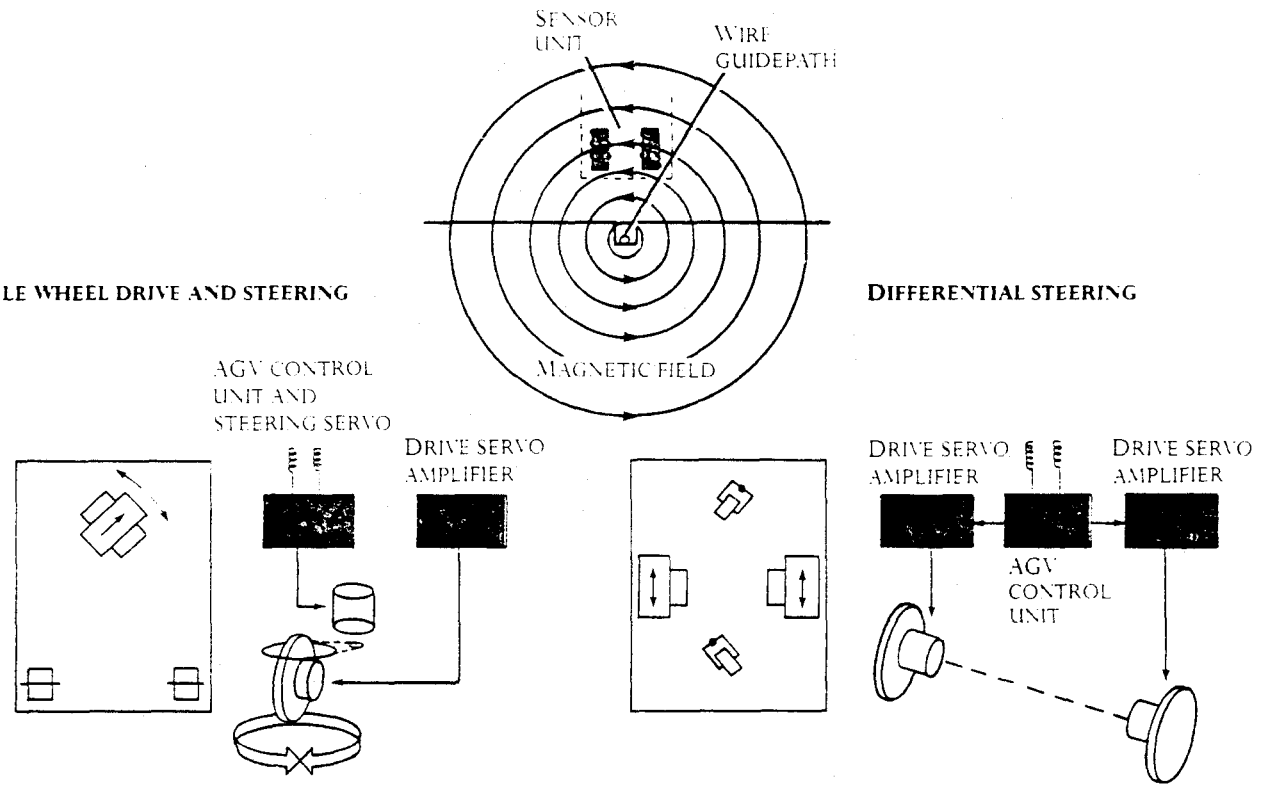

The carrier is guided between a number of pick-up and delivery points by means of an inductive loop which is permanently embedded into the floor. It is equipped with a sensor having two coils which sense the electromagnetic field induced by the wire guidepath.

When the carrier is centered directly above the wire (picture no 1), equal voltages are induced in the coils. But if the carrier moves slightly to either side of the wire, as in a curve, the voltages will differ. This difference is amplified and thereby controls a servo motor which turns the steered wheel or actuates the drive wheels so that the carrier returns to its centered position. This arrangement provides very accurate steering.

The carrier may be equipped with its own intelligence in the form of a microcomputer which can control sophisticated handling devices and communicate with a central computer system.

Automatic guidance systems can also be used for applications where automatic control is to be implemented to provide high-precision maneuverability for narrow aisle trucks used in high-rise warehouses.

EXHIBIT 6.5

Netzler & Dahlgren Co AB
SE-430 40 SARÖ, SWEDEN
Phone Nat 031-706020 Fax +46 31-705802
Int +46 31-706020 Tlx 2460 ENDECE S

AGVS component structure

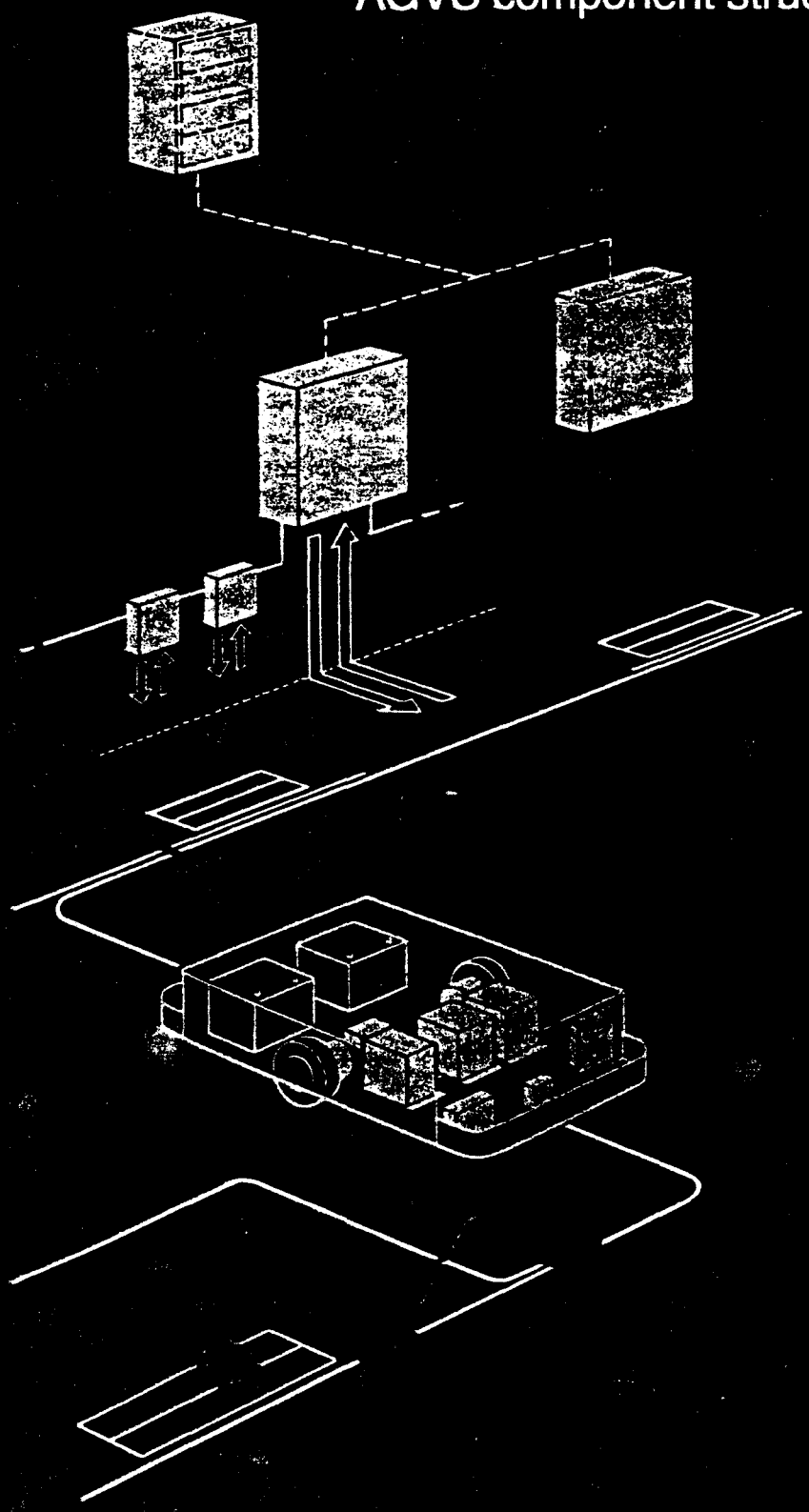

Administrative computers
(if any)

Stationary equipment

AGV terminals
Signal concentrators

and/or

Pilot line drivers
Local detection units

Track area

Pilot lines
Communication points and/or position identifying devices

Vehicle components
Inductive antennas - sensors
Vehicle controllers with/without load handling capability
Steer/drive servo amplifiers
Communication devices
Manual control devices
Battery chargers
Safety system components
Signal concentrators

Programming, test and service equipment

Programming terminals
Communication test units
Pilot line test units
Pilot line fault locators
Vehicle test units

For your vehicles and system applications.
..."from the software top to the antenna bottom"

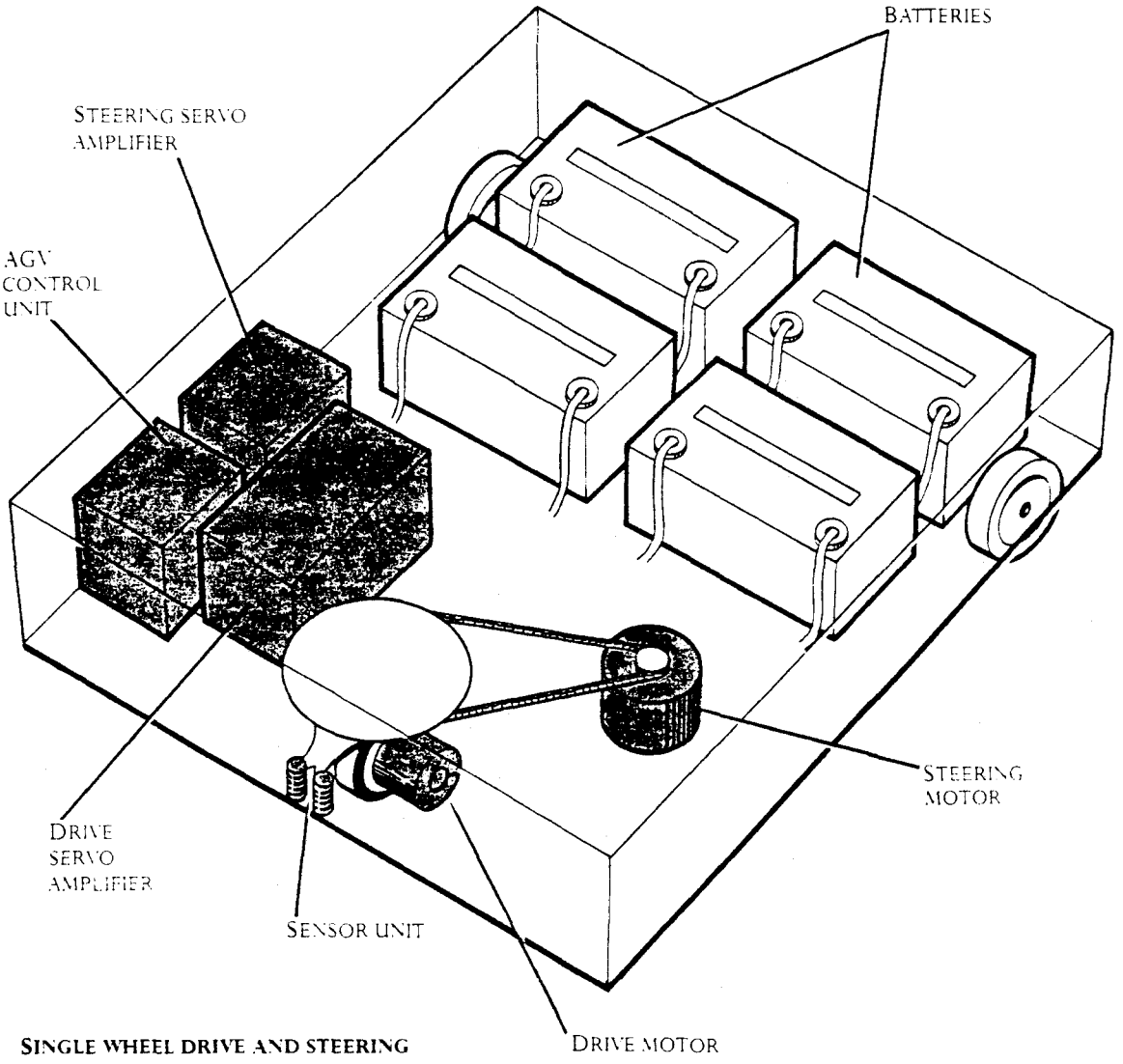

SINGLE WHEEL DRIVE AND STEERING

An offer of ultimate AGVS experience

Today, fifteen years after the delivery of our first carrier control system, our accumulated experience has made us an international leading electronics company within the field of AGVS.

The third generation systems and control equipment we are designing today incorporate all of the benefits gained from this extensive experience. In addition, our customers can rely on the sophisticated time-tested products we supply.

R & D within the field of AGVS is pursued continuously at NDC, and the fourth generation systems are just about to be introduced. These systems are being increasingly integrated with automatic production facilities that vary widely in complexity. Applications of this kind will require reliable systems which can communicate with a broad range of production equipment.

Our fourth generation carrier systems will be designed to anticipate the ever-more-complex applications of the future.

High availability

In a carrier system, the transportation function is incorporated into the system itself, rather than being linked to a single vehicle.

The system is thus invulnerable to all types of operational disturbances. If a single carrier goes down, the transport function is not incapacited. Instead, an unoccupied carrier is called in as a replacement.

AGVS for aisle-to-aisle trucks

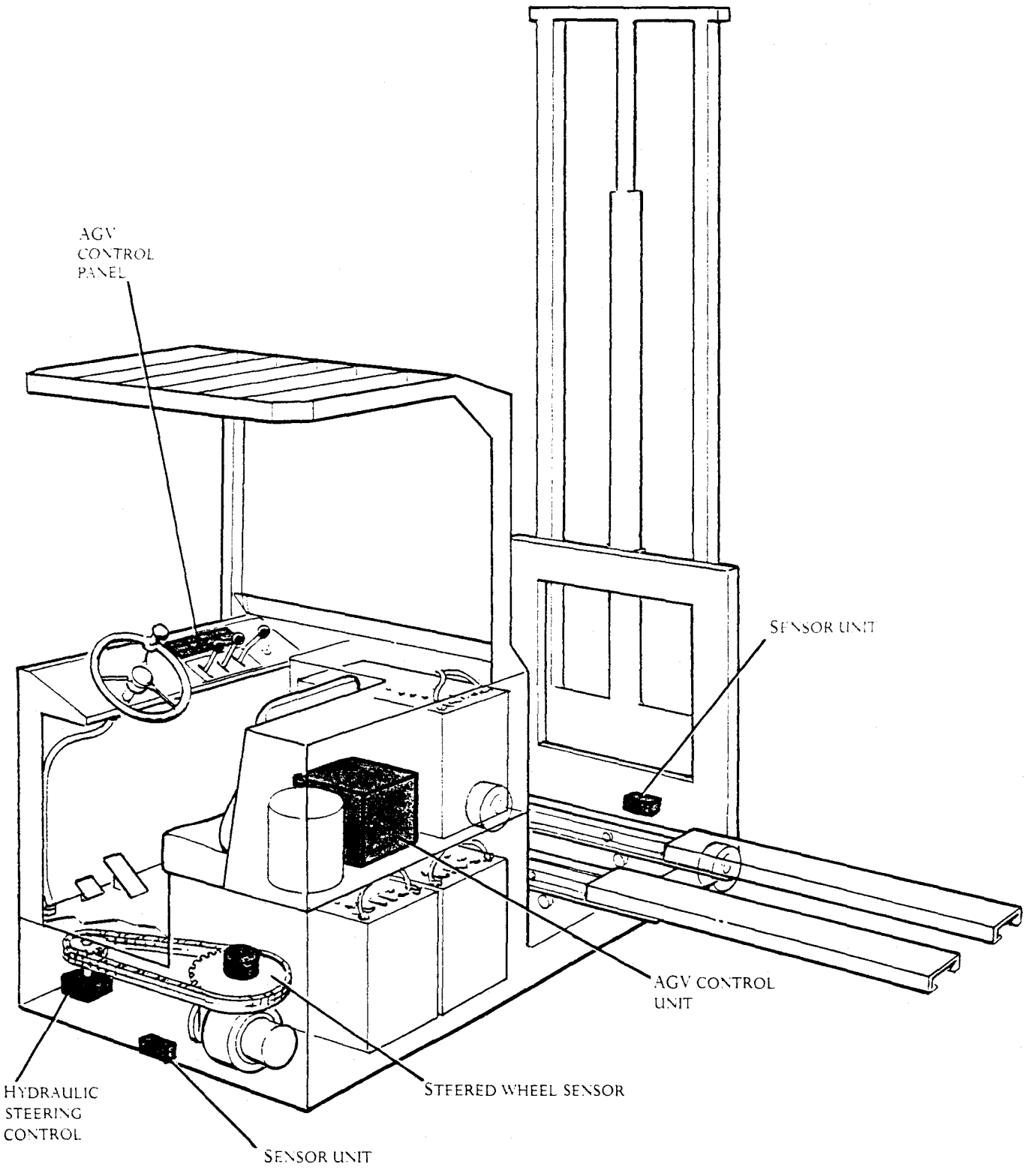

Carriers, unlike manual trucks, were designed for automatic guidance techniques from the outset. On trucks, however, the electronics and servo systems have to be adapted individually to existing mechanical facilities to ensure optimal functioning and reliability.

The particular electronic and/or hydraulic servo steering system that is chosen will depend on your existing mechanical facilities.

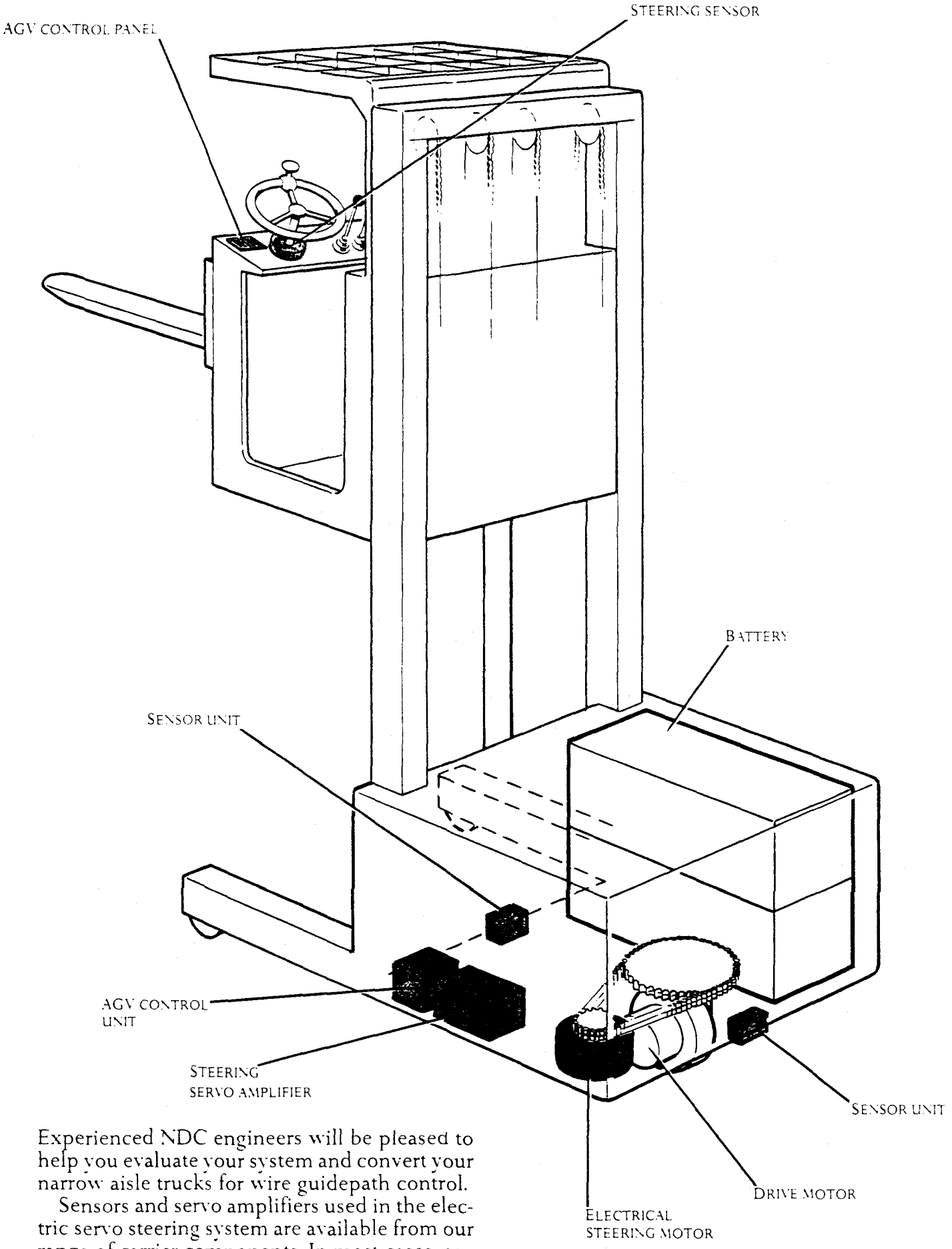

Experienced NDC engineers will be pleased to help you evaluate your system and convert your narrow aisle trucks for wire guidepath control.

Sensors and servo amplifiers used in the electric servo steering system are available from our range of carrier components. In most cases, our standard AGV control equipment can be used without modification.

FAX: 616 347-3931 EXT. 273

Reply to:
6611 Folsom-Auburn Road
Suite D
Folsom, California 95630
Phone: (916) 988-1698

8212 HARBOR SPRINGS ROAD / HARBOR SPRINGS, MICHIGAN 49740 / (616) 347-3931

Control Engineering Company
affiliate of the JERVIS B. WEBB COMPANY

April 17, 1990

Kaiser Engineers, Inc.
1800 Harrison St.
Oakland, CA 94623

Attn: Mr. Jack Delaney

Subject: AGV Budget Pricing
for Super Collider Project
CP-90-0066

Gentlemen:

With regard to our conversations, the following is a rough order of magnitude price breakdown for the subject system:

Ten (10) Model 1001 Tuggers @ $50,000 ea.	$ 500,000
Ten (10) Special Trailers @ $25,000 ea.	$ 250,000
Guidepath and Installation	$6,000,000
System Equipment	$ 50,000
Engineering	$ 300,000
Total ROM Pricing	$6,830,000

Should you have any questions regarding the above pricing, please do not hesitate to contact me.

Sincerely,

CONTROL ENGINEERING COMPANY

John K. Walenta
Sales Engineer/Western Region

JKW/mg

EXHIBIT 6.6

INTENTIONALLY BLANK

7. TROLLEY AND BATTERY SYSTEM

Due to the long traveling distances inside the tunnel, consideration was given in early stages of the conceptual design to providing all vehicles with trolleys as well as batteries.

Two different conductor bar systems would have to be installed to avoid lowering the trolley every time two vehicles pass each other, since traffic will be heavy in both directions.

Trolleys mounted on vehicles should have a swing of 24 inches in order to bypass each other and return to the through lane in the tunnel.

In general, vendors are recommending against trolleys because of their expense, the technical difficulties involved, the safety problem, the high cost, and the space requirements for both conductors and trolleys. Cost of the trolley and conductor system was quoted by one vendor at $9.4/ft for the conductor and $150 per carrier. For 108 miles of conductor, the cost of conductor alone would be 104 x 5,280 x 9.4 = $5,161,728. This number includes neither discounts nor installation costs.

A battery system will operate for four to eight hours, after which it needs recharging. Since vehicles are not used continuously, batteries should be operational throughout a shift and be recharged during the off shifts.

Vehicles can also be designed for a rapid exchange of batteries. A special battery cart with an adjustable roller floor can be used to deliver batteries to stalled vehicles. Two carts would be required for a changeout: an empty to take the discharged batteries and a loaded cart to deliver the charged batteries. Exhibits 7.1 and 7.2 illustrate the type of equipment available for this purpose.

Exhibit 7.3 is a proposal by Insul8 Corporation for a trolley system in the tunnel. This scheme requires a fixed carriage on wheels to carry the pickup shoes towed by the vehicles. U.S Safety Trolley Corporation also makes a trolley and pickup carriage system which consists of a molded PVC bar with copper inserts and a pickup carriage. These are not practical solutions because trolleys could not be easily disengaged for passing, but the proposals do provide useful information for further development work.

Due to the high traffic expected during installation and the technical problems and cost of a trolley system, we recommend against the use of trolleys at this time. However, room should be left for trolley installation in case it proves desirable for other reasons in the future.

NOTE: Battery charging must be done in well-ventilated areas, as hydrogen gas is produced during charging. This item deserves deeper study because good underground ventilation may be difficult to obtain in certain areas. The study should also evaluate the use of sealed batteries to reduce hydrogen emissions. Sealed batteries may allow vehicles to charge at their work locations but waivers to existing regulations would

have to be obtained. The use of Fiber Nickel Cadmium batteries and opportunity charging should also be evaluated. A fast charge can be applied to these batteries, so that vehicles can keep moving without stopping to change batteries or wait for a long charge. These batteries use a potassium hydroxide electrolyte and few gases are released during charging. A supplier of these batteries is Hoppecke Battery Systems Inc. in Butler, New Jersey.

Roller Trays

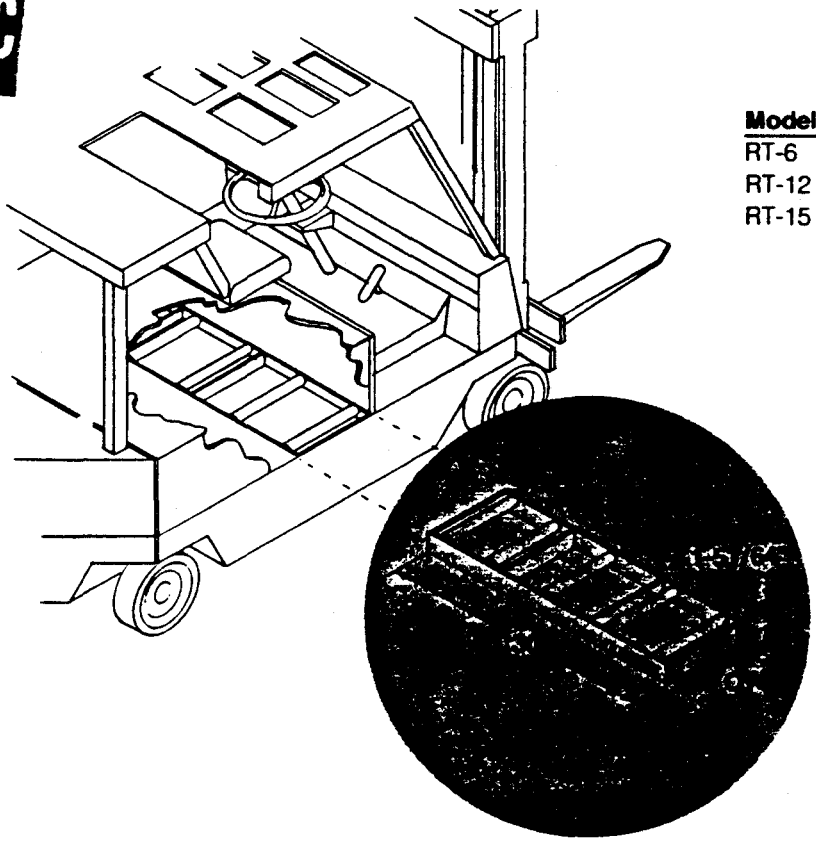

Model	Roller Width	OW
RT-6	6"	7-¾"
RT-12	11"	13"
RT-15	15"	16-½"

Battery Rollers

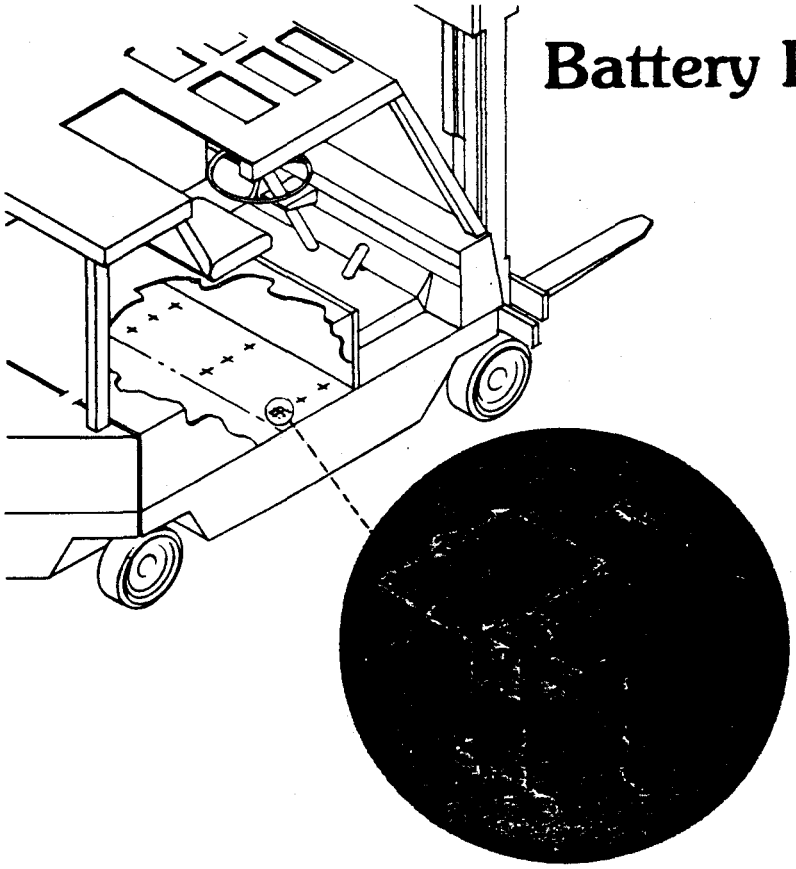

Requires 1½" × 2¼" cutout.

All Dimensions Shown are Nominal and Subject to Change Without Notice

MATERIALS TRANSPORTATION COMPANY

EXHIBIT 7.1

Applicable for any type of wheel mounting.

AMERICAN'S M-1170 SCISSOR LIFTS

American's Pantograph Lift Tables, in the M-1170 Series, have been designed for all industries using pallets or skids. The Pantograph Lift Tables, due to the small platform sizes, can be used in restricted spaces where larger, bulkier handling equipment cannot maneuver. The high travels are within the working height of most machines or operations, which eliminates reaching and bending by the operator. Loads may be positioned at any point in the up and down travel making the load accessible to the operator from all sides and levels, in turn eliminating worker fatigue and promoting safer handling.

The capacity range of the Pantograph Series—1000# to 6000#—allows versatility as to the types and sizes of material which can be handled. Equipped with wheels the units are easily maneuverable for positioning loads in the working area, or to move from one location to another.

TABLE ADDED TO CART

SPECIFICATIONS

Models appearing in bold face type are regular stock items.

Model	Capacity	Vertical Travel	Collapsed Height Min.	Collapsed Height w/wheels	Platform Size Min.	Platform Size Max.	Phenolic Roller Bearing Wheels	Up Travel Time ¾ HP	Up Travel Time 1½ HP	Steel Deck
M-1170-2A	**4000#**	**36"**	**7"**	----	**18"x 48"**	**24"x 60"**		**35 sec.**		**3/16"**
M-1170-2B	**4000#**	**36"**	**7"**	**7½"**	**24"x 48"**	**36"x 60"**	**6" dia.**	**35 sec.**	**18 sec.**	**3/16"**
M-1170-2C	**3000#**	**48"**	**7"**	**7½"**	**24"x 60"**	**36"x 72"**	**6" dia.**	**35 sec.**	**18 sec.**	**3/16"**
M-1170-2D	**2000#**	**60"**	**7"**	**7½"**	**24"x 72"**	**36"x 84"**	**6" dia.**	**35 sec.**	**18 sec.**	**3/16"**
M-1170-2E	**6000#**	**36"**	**8"**	**8½"**	**24"x 48"**	**36"x 60"**	**6" dia.**	**48 sec.**	**24 sec.**	**3/16"**
M-1170-2J	**4000#**	**48"**	**8"**	**8½"**	**24"x 60"**	**36"x 72"**	**6" dia.**	**48 sec.**	**24 sec.**	**3/16"**
M-1170-2K	2000#	84"	12"	12½"	32"x 84"	48"x 96"	6" dia.	48 sec.	24 sec.	3/16"
M-1170-2L	3000#	60"	8"	8½"	24"x 72"	36"x 96"	6" dia.	48 sec.	24 sec.	3/16"
M-1170-2M	4000#	84"	10"	10½"	32"x 84"	48"x 96"	6" dia.	96 sec.	48 sec.	3/16"
M-1170-2N	6000#	60"	10"	10½"	32"x 72"	48"x 96"	6" dia.	70 sec.	35 sec.	3/16"
M-1170-2P	4000#	72"	10"	10½"	32"x 84"	48"x 96"	6" dia.	96 sec.	48 sec.	3/16"

Vertical travel plus collapsed height equals overall height.

NOTES:

Down Travel Time is about 10 secs. ALL MOTORS ARE T.E.N.V.
¾ HP pumps are either 1/60/110 or 3/60/220-440 V. 1½ HP pumps are 3/60/220-440 V.
Std. controls are foot pedal or push button up and down.
Capacities are gross. Deduct for any extra platform equipment or rolls for net capacity.

EXHIBIT 7.2

INSUL-8™
CORPORATION
867 AMERICAN STREET - P.O. BOX 1188 - SAN CARLOS, CALIFORNIA 94070-1188
TELEPHONE: 415-595-3050 - FAX: 415-595-4801

April 19, 1990

Kaiser Engineers
1800 Harrison
P.O. Box 23210
Oakland, CA 94623

Attn: Mr. Jack Velaney

Re: Cart Electrification for Super Colider Project

Dear Mr. Velaney:

Insul-8 Corporation is pleased to submit our proposal and budgetary figure for this application.

The product we propose is a standard catalog line. We offer to mount 120 Amp Cluster Bar in a aluminum channel. Aluminum channel would serve as bracket for supporting electrification and as riding surface for carrier towed by service cart.

Cluster Bar is designed in a modular concept to fit in confined space. The product is UL listed and meet the European specification for "Finger Safe" to guard against accidental contact to a "Live" surface. The Conductor has a inverted "V" for positive tracking of the Collector. The fifteen feet sections will be joined by a bolted splice assembly.

Collector carriers shall have a long life bearing with minimum diameter of 2 inches. All bearings shall be mounted externally for ease of maintenance.

Our budgetary figure for this design is $9.40 per linear foot of system. Based on parallel systems of 4 Conductor and each system being 56 miles, the total budgetary number would be $5,559,000.00. Collector carrier would be additional and budgetary number for each carrier is $150.00.

If you have any questions, please call at your convenience.

Best regards,

Don Sheppard
General Sales Manager

DS:las

cc: Optimization Marketing
Attn: Bob Fansler

DELACHAUX
EXHIBIT 7.2

INSUL-8™
ORPORATION
867 AMERICAN STREET - P.O. BOX 1188 - SAN CARLOS, CALIFORNIA 94070-1188
TELEPHONE: 415-595-3050 - FAX: 415-595-4801

October/89

SUGGESTED SPECIFICATIONS FOR INSUL-8 CLUSTER BAR

The conductor/collector system shall be 40 Amp galvanized steel or 120 Amp copper conductor that supplies electric power to moving carriers as manufactured by Insul-8 San Carlos, CA. The product shall be UL listed for 600 volts.

Conductor shall be roll formed inverted "V" cross section encased in an insulating PVC outer cover in 15 foot lengths. The PVC cover shall completely insulate the conductor and collector shoe while in operation.

Conductor shall comply with the European International Protection, IP2, standards for "finger safe".

There shall be an option of joining methods to connect conductor lengths together. A four bolt splice plate with plastic outer cover or a crimp-on splice connector with plastic outer cover.

Expansion section shall be manufactured from conductor having two overlapping covers of expansion gaps to accommodate thermal expansion and contraction. The expansion shall be 6 foot length and supplied with internal flexible copper cables to transfer current within the overlapping cover of expansion gaps. During operation the collector shoe shall follow the continuous inverted "V" cross section without electrical or mechanical interruption.

Isolating section shall be for electrical separation where different electrical powered areas are required. This section shall be manufactured with plastic transfer caps and mechanically aligned brackets to hold the conductors rigid for collector shoe travel. This section shall be supplied in 6 foot lengths.

Hanger clamp shall be polycarbonate molded hanger suited for vertical and horizontal mounting. Hanger clamp shall allow for snap in conductor mount with a sliding tight fit. Spacing of the hanger clamp shall be three feet on straight runs and two feet on curves.

Powerfeed shall be bolt in clamp for number 10, 8 or 6 AWG cable cable sizes. The powerfeed shall be supplied with a plastic outer cover.

Collector shall be a spring loaded, insulated arm assembly that articulates in both the vertical and horizontal directions. An easily replaceable contact shoe and case holder shall be the only wearing parts. Collector shall be rated at 30 amperes continuous duty.

DELACHAUX

CLUSTER-BAR™
TYPICAL 4 CONDUCTOR SYSTEM

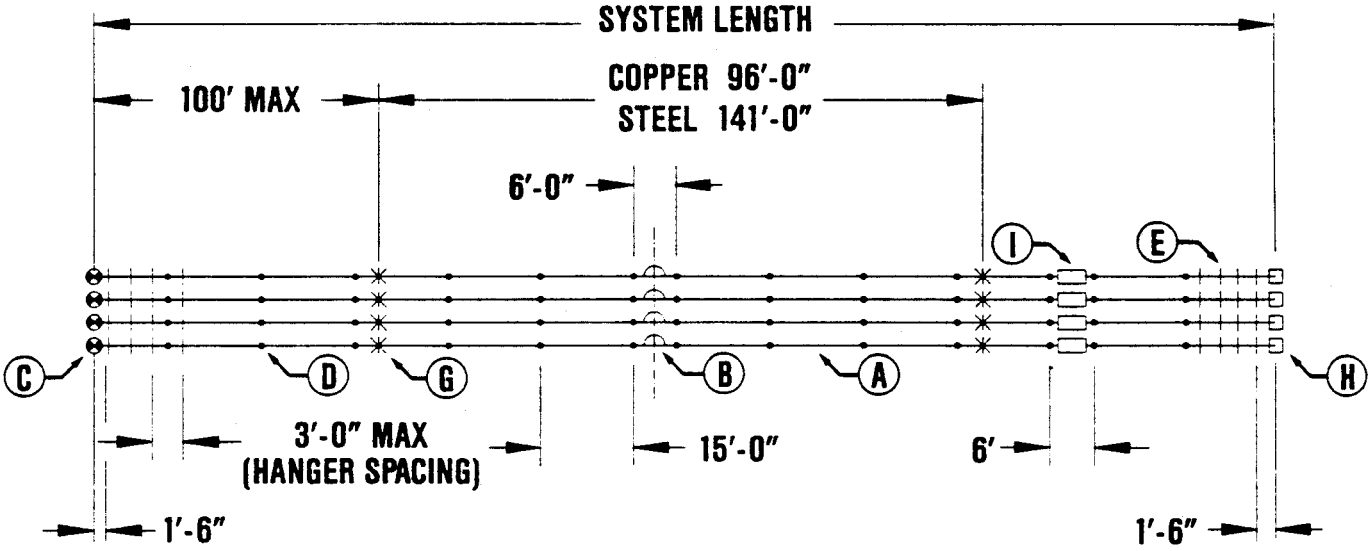

NOTE: MAXIMUM LENGTH W/O EXPANSIONS
120 AMP COPPER IS 150'
40 AMP STEEL IS 150'

BILL OF MATERIAL

A	CONDUCTOR SECTION 15 FOOT LENGTH	See Page 3
B	EXPANSION SECTION 6 FOOT LENGTH	See Page 3
C	POWERFEED	See Page 5
D	SPLICE ASSEMBLY	See Page 8
E	HANGER CLAMP	See Page 4
F	SUPPORT BRACKETS	See Page 4
G	ANCHOR CLAMP	See Page 4
H	END COVER	See Page 5
I	ISOLATION SECTION	See Page 9
J	COLLECTOR (Not Shown)	See Page 5
K	COLLECTOR MOUNTING STAFF (Not Shown)	See Page 5

INSUL-8™ CORPORATION

CLUSTER-BAR™

U.L. LISTED

Listed Underwriters' Laboratories - File No. E 16232

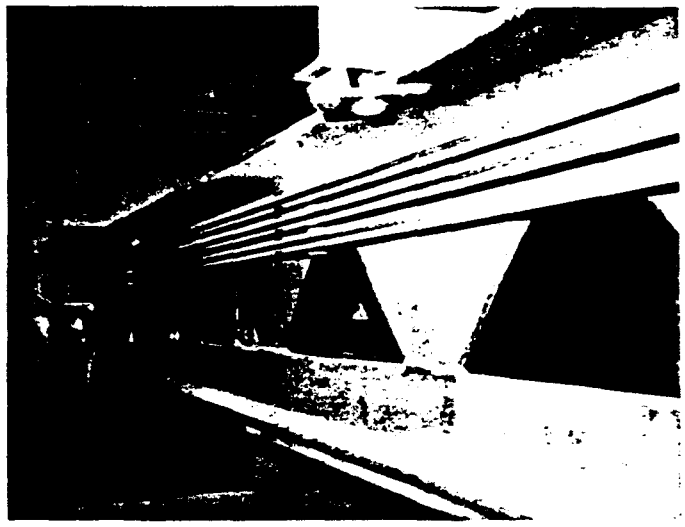

PATENTS
Insul-8™ products are manufactured under patents issued and pending in the U.S.A. and other countries.

SPEED
Standard Cluster Bar Systems operate to 600 FPM. Consult factory for higher speeds. 6.8 MPH

CONDUCTORS
Continuous roll formed inverted "V" cross section encased by an insulating PVC cover. Conductors are available in 40 AMP galvanized steel and 120 AMP electrolytic copper. The PVC cover meets all requirements for plastic electrical insulation and is UL94 rated V-0 — will not support combustion. U.L. listed to 600 volts. The standard conductor assembly length is 15 feet.

LISTINGS
Listed Underwriters' Laboratories, Inc. - File No. E16232.

EXPANSION SECTIONS
These 6 foot sections are factory assembled with an overlapping design to provide continuous contact with collector shoes. Powerfeeds and flexible jumpers are installed to meet electrical and mechanical requirements. Spacing for expansion sections is every 96' for 120 AMP copper conductor and every 141' for 40 AMP steel conductor. See chart below for gap setting.

CONDUCTOR:

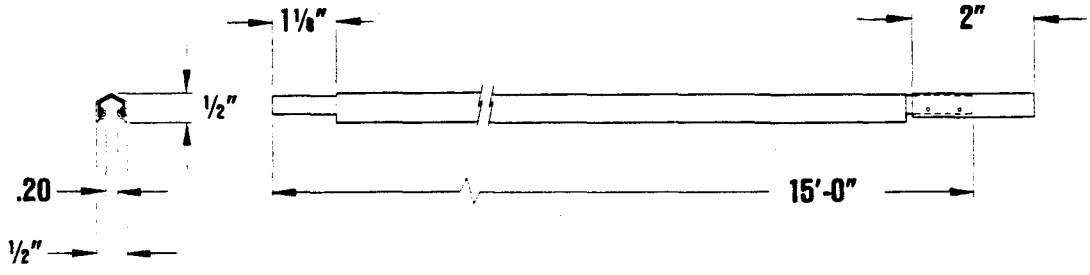

Bolted Splice Connection

Part No. 28656 Galvanized Steel	40 AMP 15 ft. (Wt. 2) 40 AMP **Special Part No. 28993**
Part No. 28655 Rolled Copper	120 AMP 15 ft. (Wt. 3) 120 AMP **Special Part No. 28992**

Crimp Splice Connection

Part No. 28101 Galvanized Steel	40 AMP 15 ft. (Wt. 2) 40 AMP **Special Part No. 28109**
Part No. 28100 Rolled Copper	120 AMP 15 ft. (Wt. 3) 120 AMP **Special Part No. 28108**

Splice kit included with price of conductor. Factory engineered curved systems available.

EXPANSION SECTIONS:

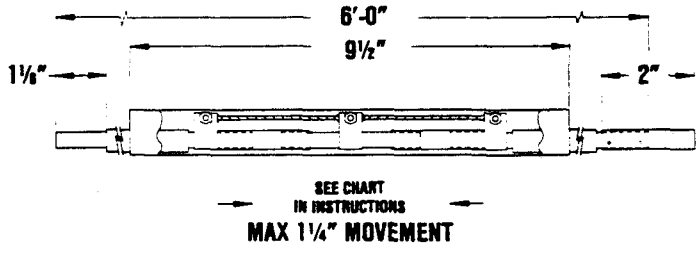

Bolted Splice Connection

Part No. 28658 Galvanized Steel	40 AMP 6 ft. (Wt. 6)
Part No. 29657 Rolled Copper	120 AMP 6 ft. (Wt. 7)

Crimp Splice Connection

Part No. 28104 Galvanized Steel	40 AMP 6 ft. (Wt. 6) 120 AMP 6 ft. (Wt. 7)
Part No. 28103 Rolled Copper	120 AMP 6 ft. (Wt. 7)

GAP SETTING CHART	
Temp. (°F)	Dim. 'X'
120°	1/2
110°	5/8
100°	3/4
90°	7/8
80°	1
70°	1 - 1/8
60°	1 - 1/4
50°	1 - 3/8
40°	1 - 1/2
30°	1 - 5/8
20°	1 - 3/4

CLUSTER-BAR™

HANGER CLAMPS

ded polycarbonate hangers designed for vertical or horizontal mounting. The hanger clamps "snap-on" the conductor for a sliding tight fit. No field adjustments are required.

Part No. 28112 - Single

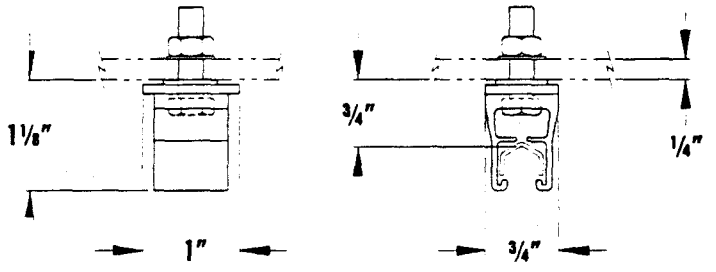

Material:

Plated Hardware
(Wt. .08)

ANCHOR CLAMPS

Molded plastic pieces that are bolted together and are positioned on each side of the hanger clamp. The anchor clamps hold the conductor firm while allowing thermal expansion and contraction.

Part No. 29864 - Single

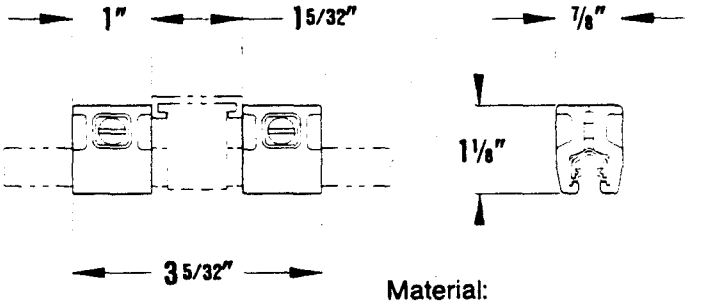

Material:

Plated Hardware
(Wt. .14)

MULTI-CONDUCTOR CLAMPS

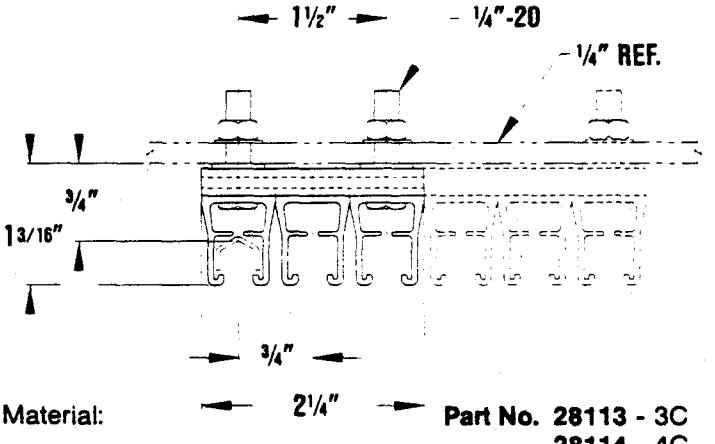

Material:

Aluminum Mounting Channel
with Hanger Clamps
Consult factory for qualities not shown.

Part No. **28113** - 3C
28114 - 4C
28115 - 5C
28116 - 6C

FLANGE BRACKET

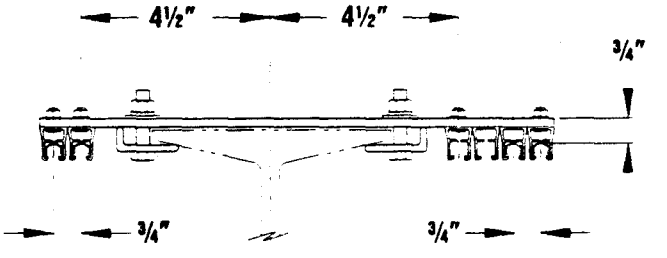

Part No. 29944 (Shown)
(6 snap on hanger clamps 2/4.)

WEB BRACKET

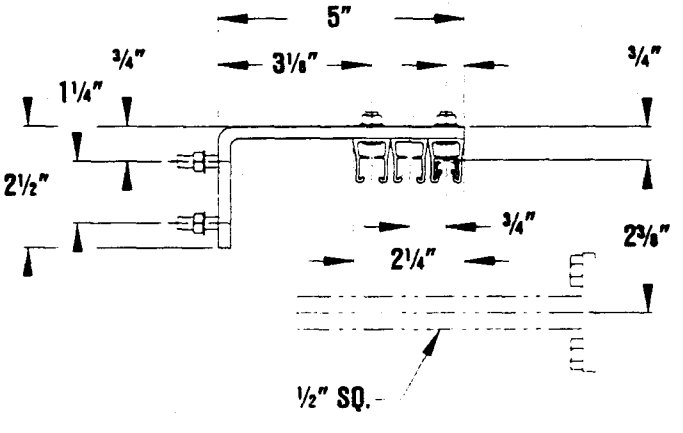

Material:

Aluminum Channel

Part No. **28665** - 3C
29939 - 4C
29940 - 5C
29941 - 6C

MULTI-CONDUCTOR FLANGE BRACKETS

Part No.	Bracket Setting
28666 - 3C	2/1
29942 - 4C	2/2
29943 - 5C	2/3
29944 - 6C	2/4
29986 - 3C	0/3
29987 - 4C	0/4
29988 - 5C	0/5
29989 - 6C	0/6

POWERFEEDS

Simple bolt on clamps used with number 6, 8, and 10 AWG cable sizes.

POWERFEED SPLICE KIT

Part No. 28067 - #10 AWG
Part No. 28066 - #6 AWG

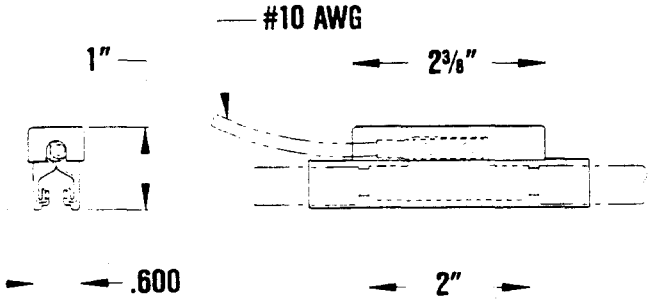

Material:

Copper Clamp
PVC Cover
Plated Hardware
Wt. .4

END COVER

Part No. 28105

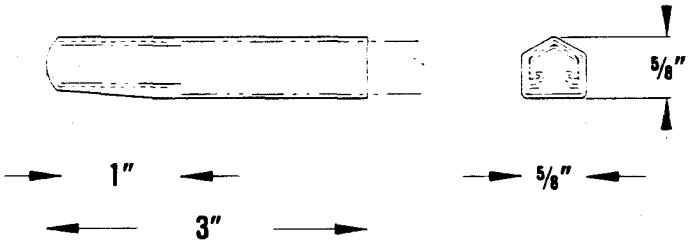

Material:

Polypropylene
Boot Type (Wt. 3)

END POWERFEEDS

Part No. 29836 - #8 AWG
Part No. 29837 - #10 AWG

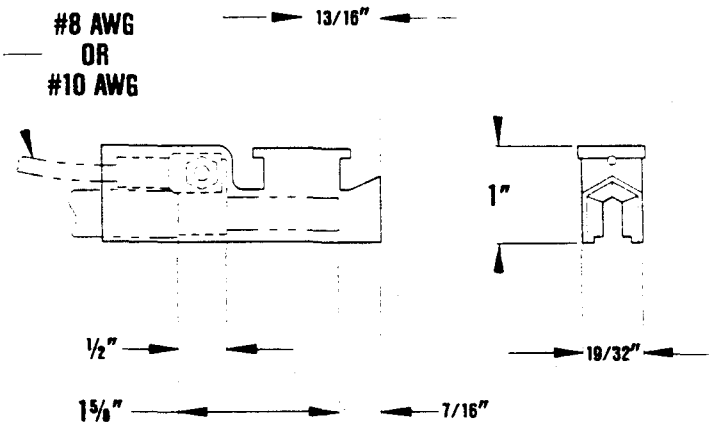

STAFF COLLECTOR MOUNT

Part No. 28822 - Single **Part No. 29182** - Double

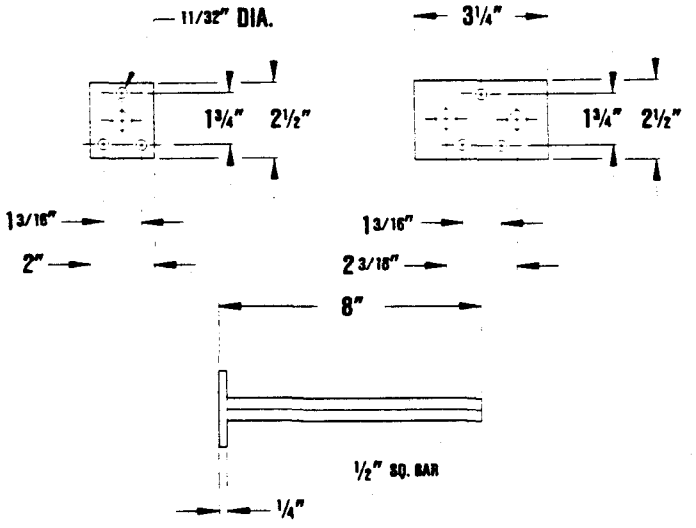

COLLECTORS

Insulated contact heads mounted on self centering spring loaded arm assemblies that articulate in both the vertical and horizontal positions. Exposed metal surfaces do not carry current, as mounts are grounded. The sliding contact type confines wear only to the easily replaceable contact shoes.

COLLECTORS: 30 AMP, ¾" Minimum Spacing

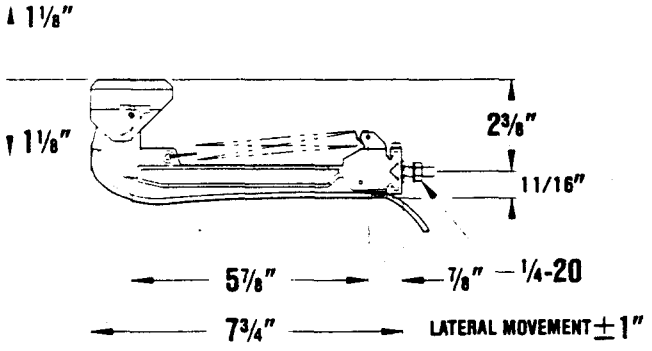

Channel Mount (Wt. .8)

Part No. 29932 - 3C
29945 - 4C
29946 - 5C
29947 - 6C

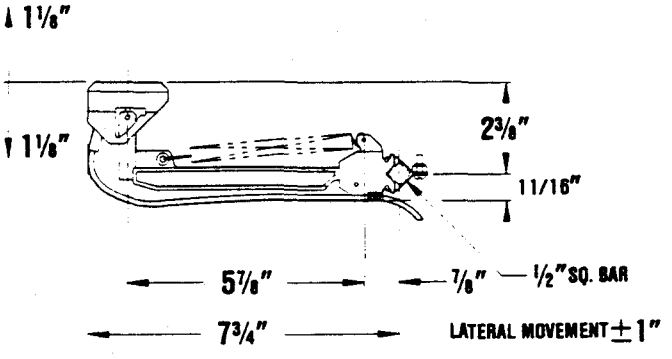

Part No. 29830

½" Square Bar Mount (Wt. .8)
(Mounting Staff Available. See above.)

ENGINEERING DATA FOR CLUSTER-BAR™

Proper slection of Cluster-Bar™ contact conductor systems is simple, requiring only the ampacity, voltage and ambient conditions.

The method determining the rating for cranes and hoist is completely outlined in NEC 610-14(e). Further reference to the Code are made where applicable.

I. For a single crane, simply use the nameplate full load ampere rating of the largest motor or group of motors for any one function plus half the rating of the next largest motor or motor groups.

Hoist = 65a × 1.0 = 65.0
Bridge = 27a × 0.5 = 13.5
Total 78.5 amps

II. When the motor ampere ratings are unknown, a good approximation may be made using the nominal horsepower ratings of the motors, converting them to full load amperes per NEC table 430-150 and proceeding as above. If the motors are not three-phase, applicable tables 430-147 through 430-149 must be used.

A few examples from the tables are:

Full-Load Current (Three-Phase Alternating-Current Motors)

HP	230V	460V	575V
10	28	14	11
15	42	21	17
20	54	27	22
25	68	34	27
30	80	40	32
40	104	52	41
50	—	65	52
60	—	77	62
75	—	96	77
100	—	124	99

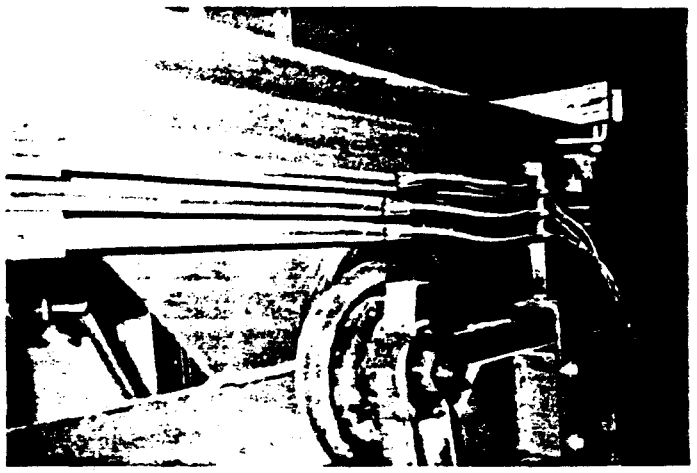

Full-Load Current in Amperes, Direct-Current Motors Armature Voltage Rating (Direct-Current)

HP	240V
10	38
15	55
20	72
25	89
30	106

VOLTAGE DROP

"The arithmetical difference between the voltages at the feed point and the load at extreme end." It is usually expressed as a percentage of the supply voltage and can be calculated as shown below.

Voltage drop increases in direct proportion to the length of the conductors. The Electrical Overhead Crane Industry specifications limit total voltage drops to 3% on runways and 2% on bridge conductors. Since powerfeeds are usually located at the mid-point of a system, the effective length is the distance from powerfeed to the end of the runway. On longer systems is may be necessary to provide additional feedpoints.

Electrical Data

CONDUCTOR	AMPACITY	RESISTANCE R (DC)	REACTANCE 60 HZ 3Ø	IMPEDENCE Z (60 HZ)	SPACING
Steel	40 AMP	2382	382	2412	3/4"
Copper	120 AMP	245	38	248	3/4"

Voltage Drop Per 100 Feet of Run Per 100 Amps of Current

CONDUCTOR	3 Ø 60 HZ	@ 3% 480 VOLTS
Steel	40.1	90 feet
Copper	4.1	293 feet

EXAMPLE

Copper conductor 3 Ø, 250 feet, 60 amp load, VD = 4.1 × 2.50 × .60 = 6.15 volts = 1.3% VD

NOTES:

INSTALLATION INSTRUCTIONS

1.) INSTALL ITEM "A", 2-PIECES, TO CEILING MOUNTING BOLTS
2.) INSTALL ITEM "C" ANCHOR TRACK.
3.) INSTALL ITEM "A", 2-PIECES, TO CEILING MOUNTING BOLTS
4.) INSTALL ITEM "B", EXPANSION TRACK.
5.) INSTALL ITEM "A", 2-PIECES, TO CEILING MOUNTING BOLTS.
6.) INSTALL ITEM "C" ANCHOR TRACK.
7.) REPEAT ABOVE

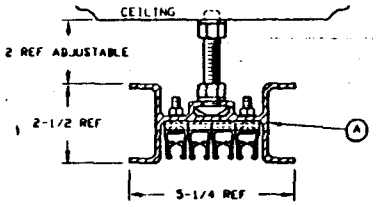

SECTION A-A

SCALE: HALF

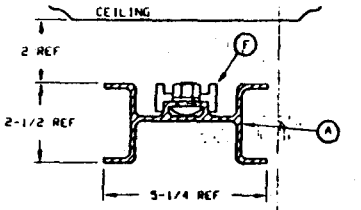

SECTION B-B

SCALE: HALF

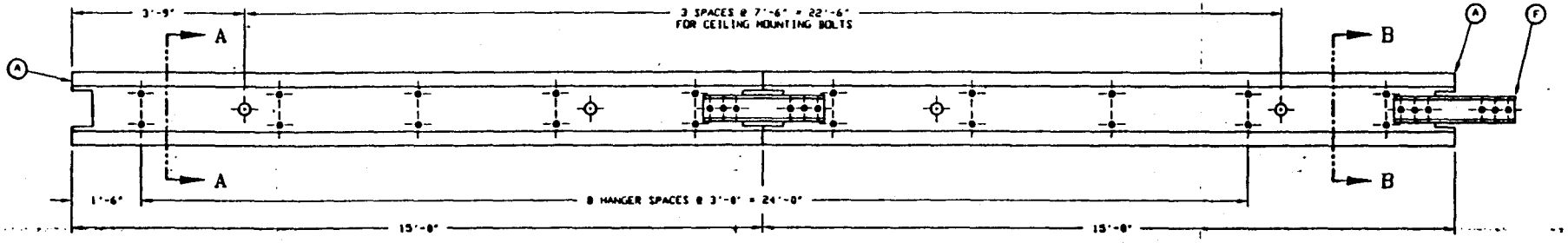

MOUNTING DETAIL, TYP.

SCALE: NONE

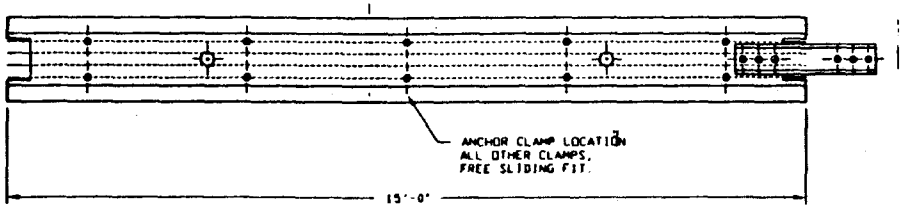

ANCHOR TRACK DETAIL, ITEM "C"

SCALE: NONE

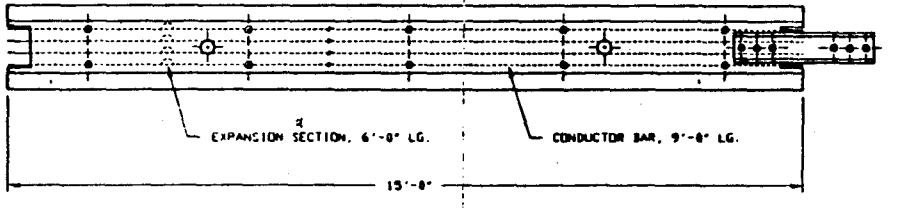

EXPANSION SECTION, DETAIL, ITEM "B"

SCALE: NONE

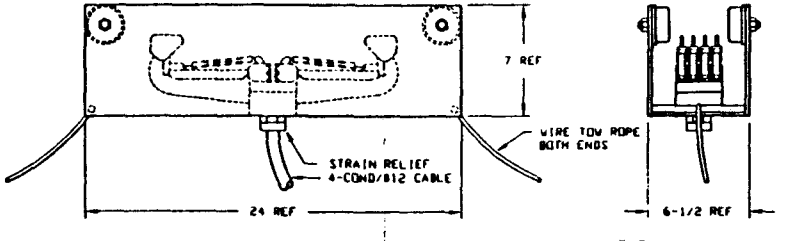

COLLECTOR TROLLEY DETAIL, ITEM "D"

SCALE: 1/4

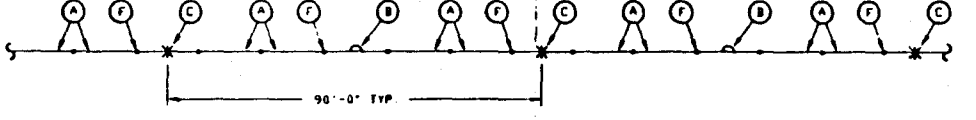

INSTALLATION DETAIL, TYP.

SCALE: NONE

F	30648	SPLICE ASS'Y, 4-CONDUCTOR TRACK		39424
E	28066	POWERFEED SPLICE KIT		1536
D	30646	COLLECTOR TROLLEY, 4-COND		
C	30645	ANCHOR TRACK, 4-COND, 15'-0" LG.		6370
B	30644	EXPANSION TRACK, 4-COND, 15'-0" LG.		6370
A	30643	CONDUCTOR TRACK, 4-COND, 15'-0" LG.		26284
ITEM	PART NO.			QTY

WE WOULD REQUIRE A POWER FEED ABOUT EVERY 770 ft PER TELEPHONE CONVERSATION w/ [illegible]

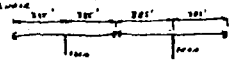

REVISIONS	

KAISER ENGINEERING, OAKLAND
SUPER COLLIDER VEHICLE
ELECTRIFICATION TOWED
CLUSTER BAR LAYOUT

DATE 4/11/90

SCALE AS NOTED

SHEET OF

D 91689-0

Yale management assistance for OSHA compliance in charging operations.

A Yale materials handling specialist is available to assist new electric truck users in planning a charging location. Below are OSHA regulations pertaining to the design of a battery charging area with which you should be familiar.

OSHA Regulation 1926.403—
Battery rooms and battery charging

(a) General requirements

(1) Batteries of the nonseal type shall be located in enclosures with outside vents or in well-ventilated rooms, so arranged as to prevent the escape of fumes, gases, or electrolyte spray into other areas.

(2) Ventilation shall be provided to ensure diffusion of the gases from the battery to prevent the accumulation of an explosive mixture.

(3) Racks and trays shall be substantial and treated to be resistant to the electrolyte.

(4) Floors shall be of acid resistant construction or be protected from acid accumulations.

(5) Face shields, aprons, and rubber gloves shall be provided for workmen handling acids or batteries.

(6) Facilities for quick drenching of the eyes and body shall be provided within 25 feet of the work area for emergency use.

(7) Facilities shall be provided for flushing and neutralizing spilled electrolyte, for fire protection, for protecting charging apparatus from damage by trucks, and for adequate ventilation for dispersal of fumes from gassing batteries.

(b) Charging

(1) Battery charging installations shall be located in areas designed for that purpose.

(2) When charging batteries, the vent caps shall be kept in place to avoid electrolyte spray. Care shall be taken to assure that vent caps are functioning.

OSHA Regulation 1910.178
subparagraph (g)—Changing and charging storage batteries

(g) Changing and charging storage batteries

(1) Battery charging installations shall be located in areas designated for that purpose.

(2) Facilities shall be provided for flushing and neutralizing spilled electrolyte, for fire protection, for protecting charging apparatus from damage by trucks, and for adequate ventilation for dispersal of fumes from gassing batteries.

(3) When racks are used for support of batteries, they should be made of materials nonconductive to spark generation or be coated or covered to achieve this objective.

(4) A conveyor, overhead hoist, or equivalent material handling equipment shall be provided for handling batteries.

(5) Reinstalled batteries shall be properly positioned and secured in the truck.

(6) A carboy tilter or siphon shall be provided for handling electrolyte.

(7) When charging batteries, acid shall be poured into water; water shall not be poured into acid.

(8) Trucks shall be properly positioned and brake applied before attempting to change or charge batteries.

(9) When charging batteries, the vent caps shall be kept in place to avoid electrolyte spray. Care shall be taken to assure that vent caps are functioning. The battery (or compartment) cover(s) shall be open to dissipate heat.

(10) Smoking shall be prohibited in the charging area.

(11) Precautions shall be taken to prevent open flames, sparks, or electric arcs in battery charging areas.

(12) Tools and other metallic objects shall be kept away from the top of uncovered batteries.

INTENTIONALLY BLANK

8. MAGNET PLACEMENT DEVICE

It was assumed that the magnet placement device would place the magnet on the support stands and then leave the area. The final magnet alignment would be done by separate means and without the aid of the magnet placement device.

Commercial side loading forklifts (see Exhibit 8.1), capable of handling loads such as the dipole, would not fit into the tunnel. A device similar to the commercial side loaders was conceived earlier for handling the 4-cm aperture dipole, but this machine was wide and complex (see Exhibit 8.2). A similar machine designed for the heavier and larger 5-cm diameter aperture magnet would not fit in the tunnel.

Another forklift-type device was designed by utilizing the mast of a commercial fork lift of appropriate capacity (see Exhibits 8.3 and 8.4), modifying it for a smaller height, and welding it to a low frame equipped with high capacity steel wheels (see Exhibits 8.5 and 8.6). The lifting system is composed of two forklifts and a hydraulic unit with pump and oil reservoir. This system has the advantage of being small, simple, and inexpensive, but it does require more manual handling because it is composed of three separate units: two lifting devices and one hydraulic and control unit joined by electric cables and hoses (see Exhibit 8.7). The system might also be utilized to lift quadrupoles and possibly spool pieces, although more information is necessary to investigate this possibility further.

The lifting devices are equipped with five wheels. Two wheels at the rear end are equipped with hydraulic motors with separate controls so that each can be operated independently. Two wheels at the front would support 70% of the load when the dipole is being lifted. These wheels would not be driven. A fifth wheel would be a caster wheel and would be spring loaded so that when the device is unloaded, the other two front wheels would be lifted from the floor. The device would then be supported on three wheels and could be transported and maneuvered by controlling the speeds of the hydraulic-driven wheels. An alternative option would have the front wheels slide when turning. This could be possible since, when unloaded, the forklift would have most of its weight on the rear wheels.

A hydraulic unit supplies hydraulic power to the forklifts (see Exhibits 8.8 through 8.11). The solenoid operated valves for the hydraulic controls are located in the back of the forklifts. A central electric control panel is located on the hydraulic unit. This control panel will be used for coarse movements of the forklifts. For inching into final position, separate controls could be placed on the back of the forklifts or separate pendant controls could be supplied for each forklift so that operators could be as close as possible to the magnet feet or magnet interfaces for accurate visual positioning.

Power for the hydraulic unit can be obtained from electric welding outlets strung along the tunnel length or from a battery pack. The battery pack would have to be furnished with sealed batteries and recharged using the welding outlets (see Section 7).

The drive wheels are mounted directly on the hydraulic motors, which in turn are mounted on the frame. An extension shaft provides support to resist the cantilever action of the wheel on the hydraulic motor. See Exhibits 8.12 through 8.17.

The sequence of operations for magnet placement is as follows:

1. The magnet would be first brought into position in front of its supports, in order to allow room for transporter maneuvering.

2. The lifting devices would then be brought into position in front of the pickup locations, against the opposite tunnel wall. See Exhibits 8.8 and 8.19.

3. The lifting devices would then be turned 90 degrees to face the magnets and aligned so that minimum adjustment has to be made during placement. See Exhibit 8.20.

4. The tow bar would be disconnected from the forward bogie and the tow vehicle advanced a few feet to allow the lifting devices to operate. The lifting devices will then advance, lift the magnet from the bogies, and move backward to allow the transporter to leave. See Exhibits 8.7, 8.21, 8.22 and 8.23.

   An alternative operation could leave the bogies in place during magnet placement while the tow vehicle travels to a turnaround area in preparation for the return trip. The forklifts straddle the bogies so that the top magnet can be placed without removing the bogies. There is no room to install the bottom magnet as the bogies would be in the way of the magnet.

5. Next, the lifting system would advance and place the magnet on the stands. Side shifters supplied with the lift forks will allow for small axial adjustments prior to placing the magnets on the stands. See Exhibits 8.24, 8.25, and 8.26.

6. The lifting system would then retract and advance to the next station.

The lifting devices have the following basic specifications:

Lift available	3-ft-6-inches
Lift speed	42 inches per minute
Side shift	3 inches max.
Travel speed @ 25 rpm	50 fpm
Inching speed @ 1 rpm	25 inches pm
Flow required	5 gpm @ 2,000 psi

The estimated cost of the lifting system is approximately $80,000 not including engineering, development, and prototype work, which could be as high as $100,000.

NOTE: The wheels for the lifting devices will put a heavy load on the concrete floor, which may cause damage. This should be taken into account when checking the quality of the concrete floor finish. If the

loads are excessive, it may be necessary to place portable sheet metal strips under the lifting devices. This could be tested during the Accelerator Systems String Test.

BAUMANN

The Four-Directional, Electric Sideloader

No turning radius required

The Baumann four-directional, electric sideloader can operate in all directions, forward, backward, left, right, and doesn't require a turning radius. It can also turn within its own length or be driven as a conventional sideloader. Add this tremendous feature to the already long list of sideloading advantages, and you will have the ultimate in high density storage capability.

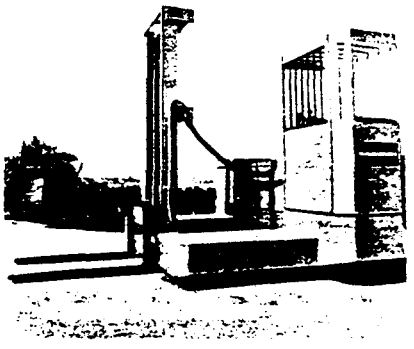

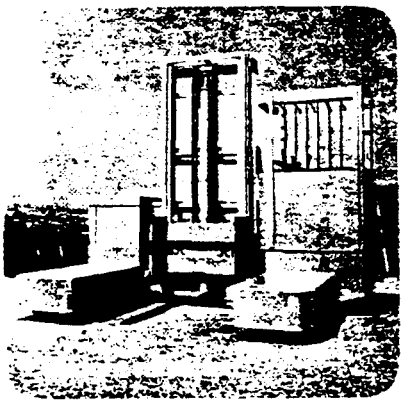

A tremendous feature

With the flick of a switch, the operator can turn the wheels 90 degrees. This enables the sideloader to travel in any direction. With this feature, you can stack one load in front of the other and accomplish the task in extremely tight areas.

How it works

The sideloader stops inside the working aisle, parallel to the load to be picked up. Turning its wheels 90 degrees, the four-directional sideloader drives toward the load and picks it up with the laterally extended upright.

Retract the upright, drive the truck back into the narrow aisle, turn the wheels 90 degrees, and the load is on its way, exiting the working aisle from either the right or left direction.

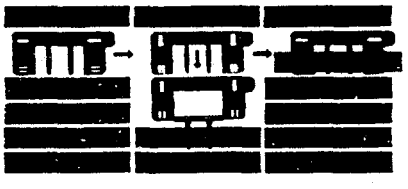

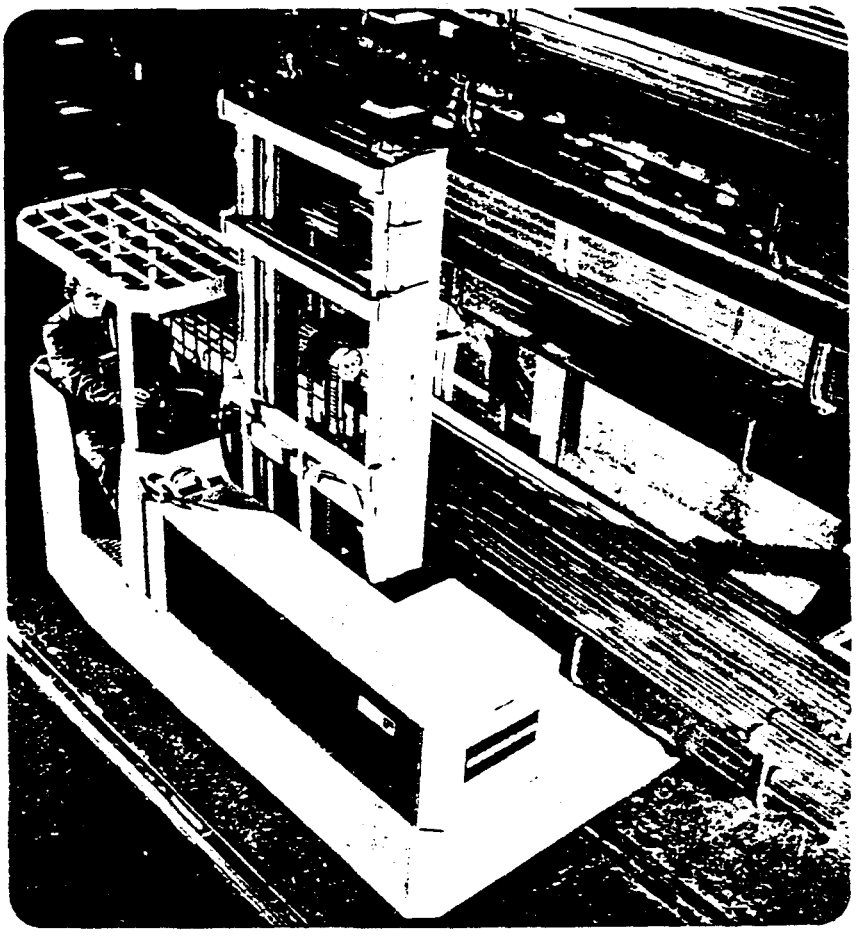

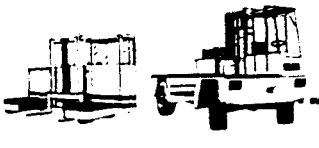

CIRCLE NO. 233

EXHIBIT 8.1

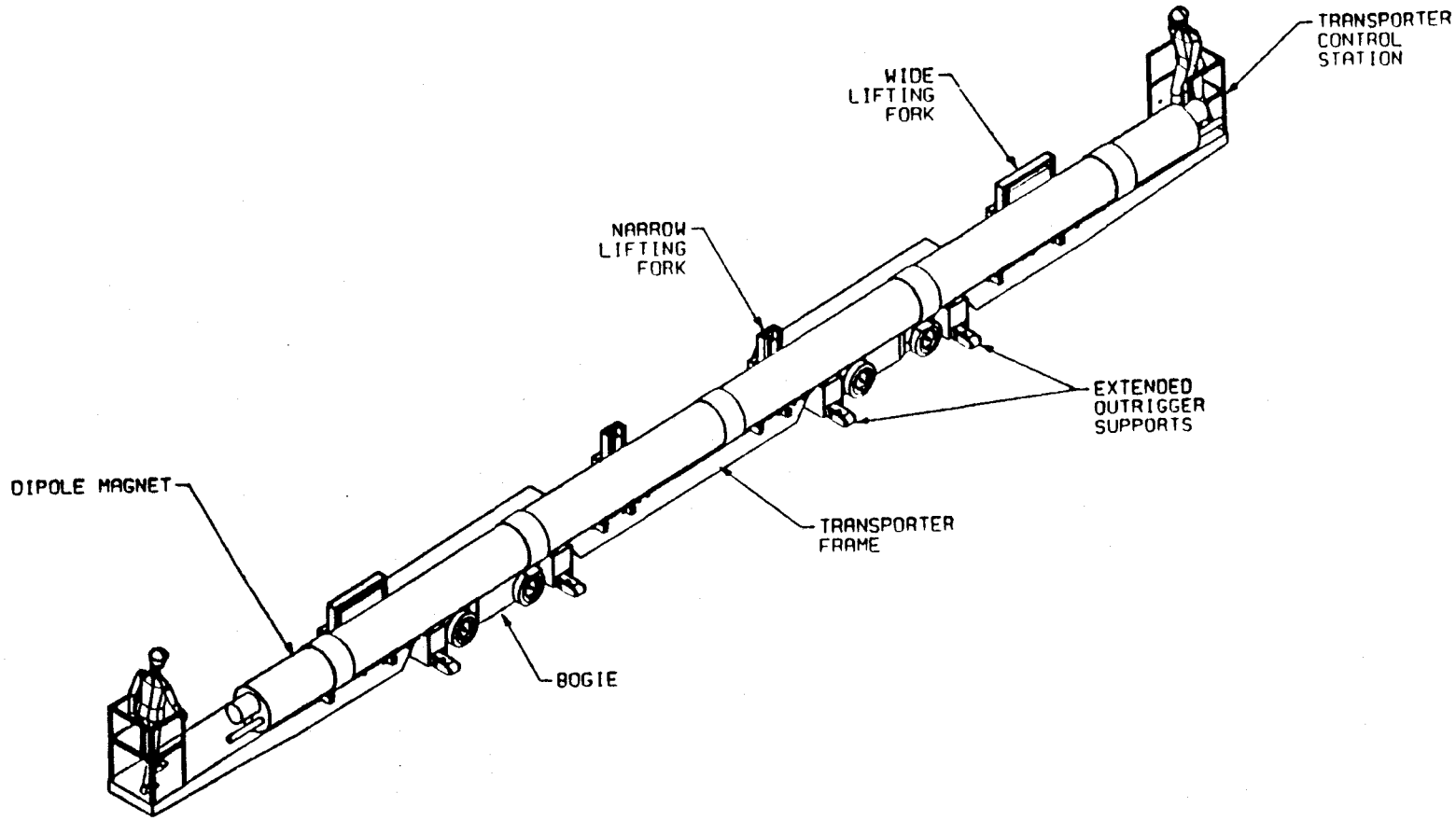

EXHIBIT 8.2
MAGNET INSTALLATION DEVICE (ALTERNATE A) WITH DIPOLE MAGNET ISOMETRIC

TOWMOTOR

LIFT TRUCKS

MODELS

540S 600S
670S 750S

CAPACITIES

6000 to 15,000 lbs.

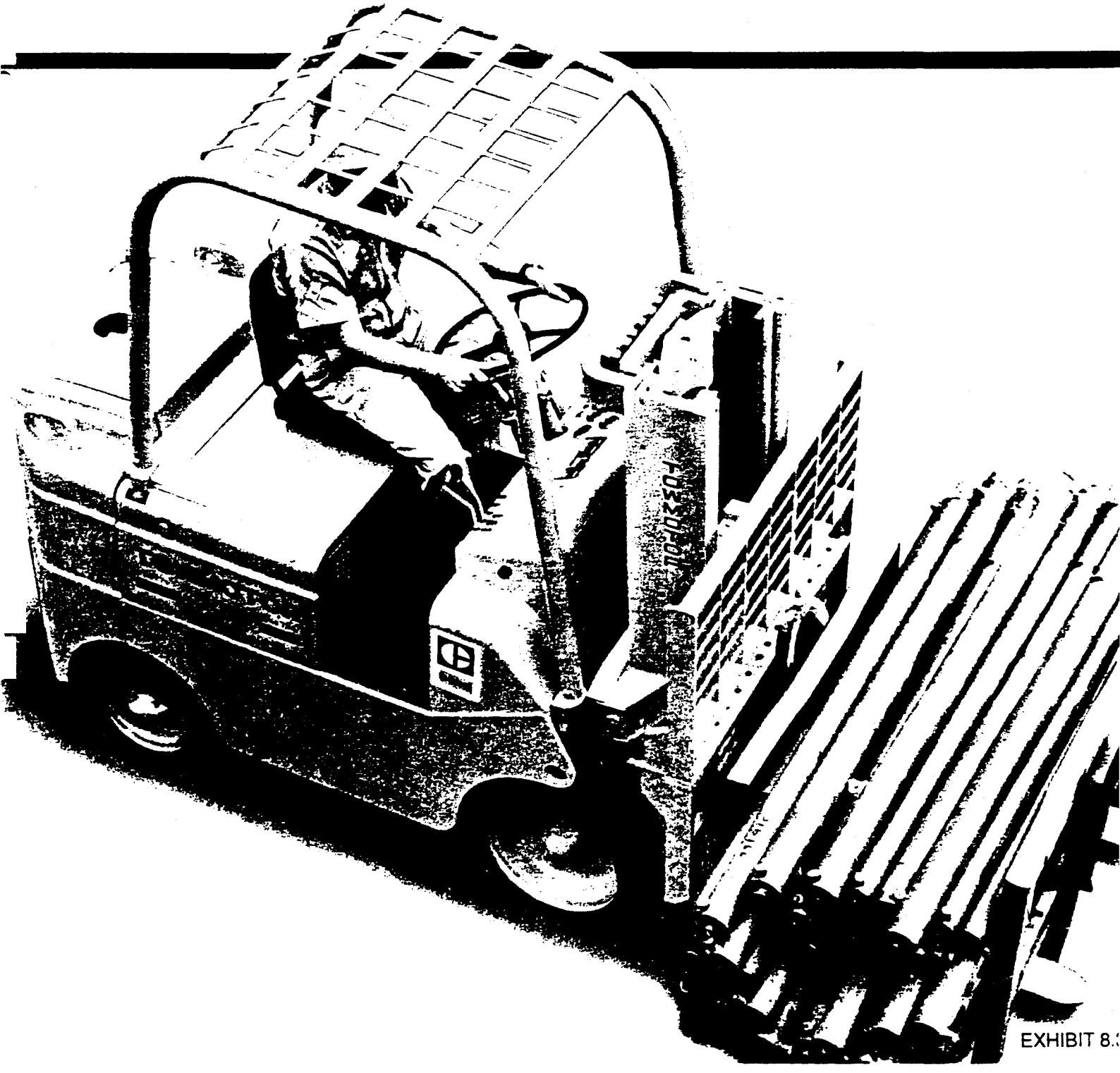

EXHIBIT 8.

Carriage Guide Rollers

Rollers protected within the sliding mast, operating on dustproof, anti-friction bearings.

Dual Lifting Chains

Roller chains provide steady, stable lift action for mast and carriage.

Nested Slider Construction

Sliders are factory fitted to minimum clearance for smooth operation.

Swivel Mounted Lift Cylinder

Permits alignment of cylinder within mast under all lifting conditions.

EXHIBIT 8.4

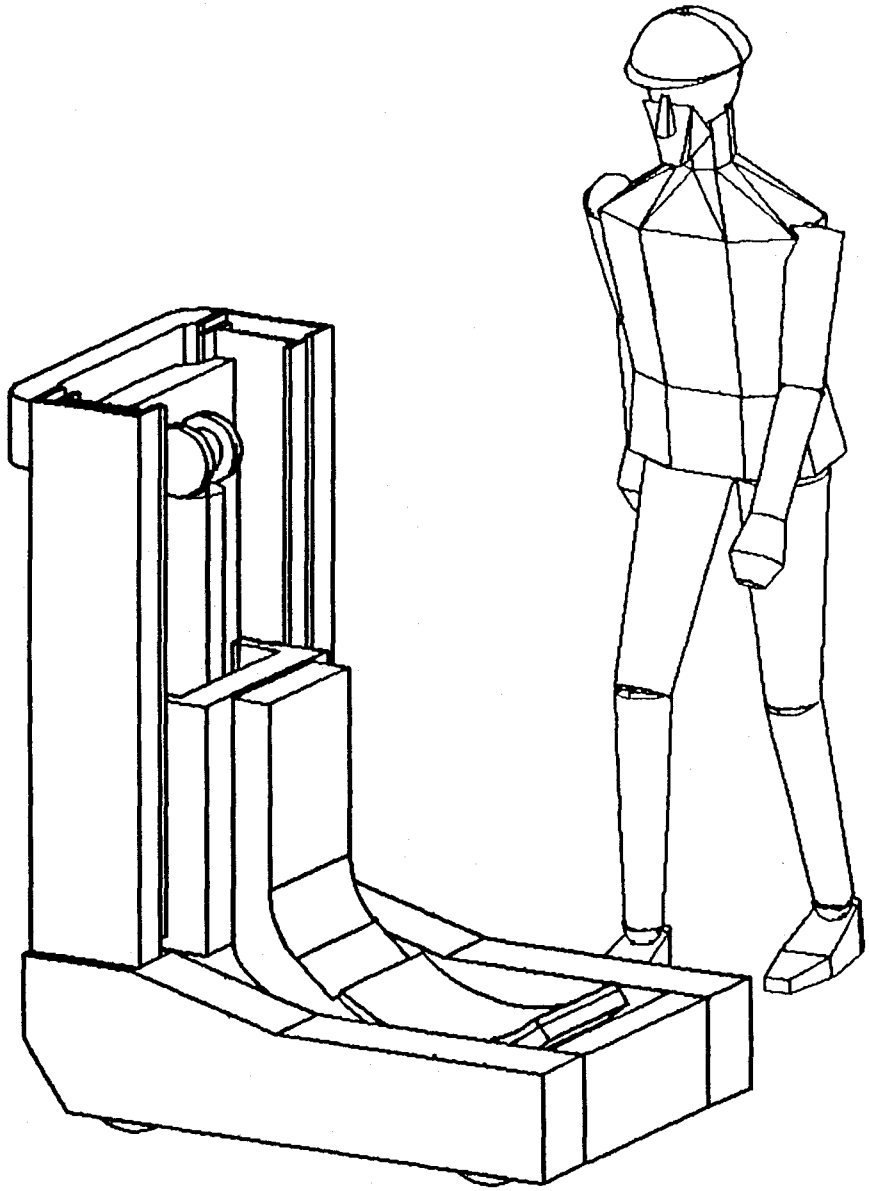

EXHIBIT 8.5
MAGNET-LIFTING DEVICE SHOWN IN LOWEST POSITION

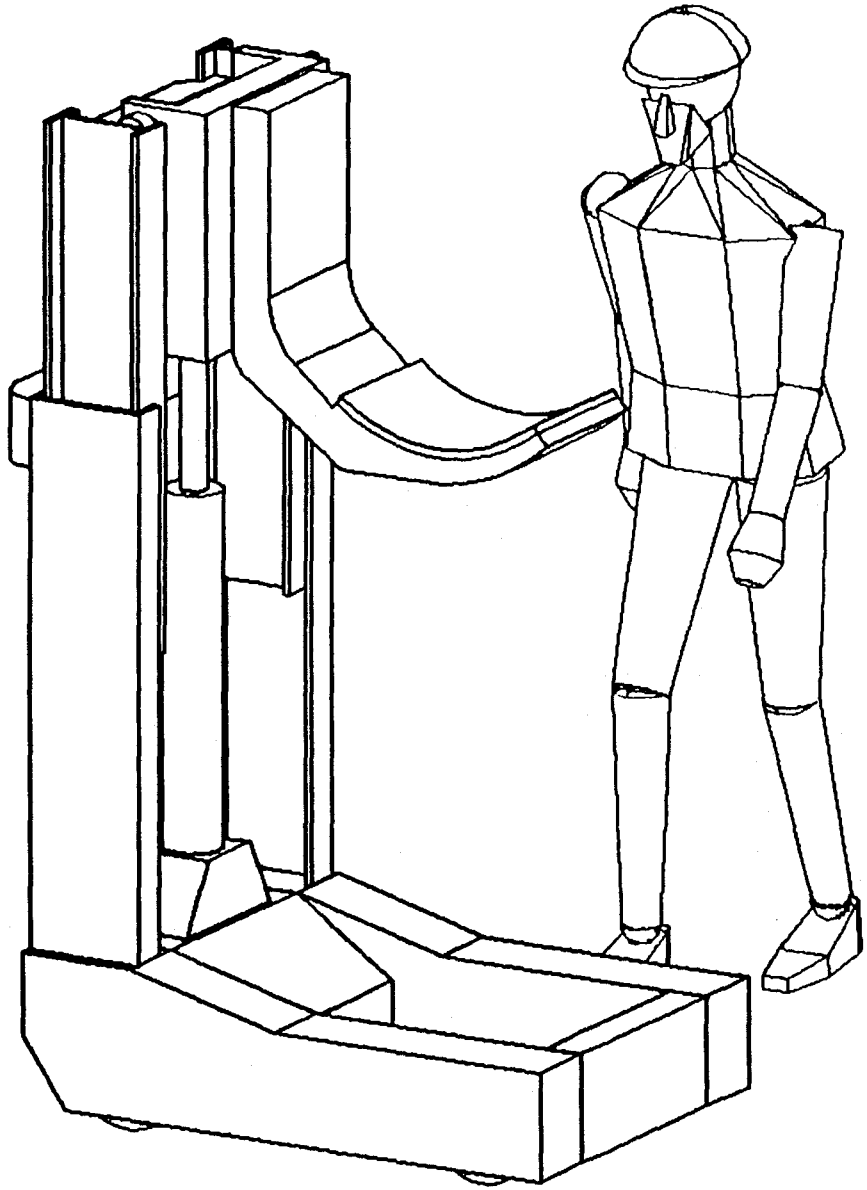

EXHIBIT 8.6
MAGNET-LIFTING DEVICE SHOWN IN HIGHEST POSITION

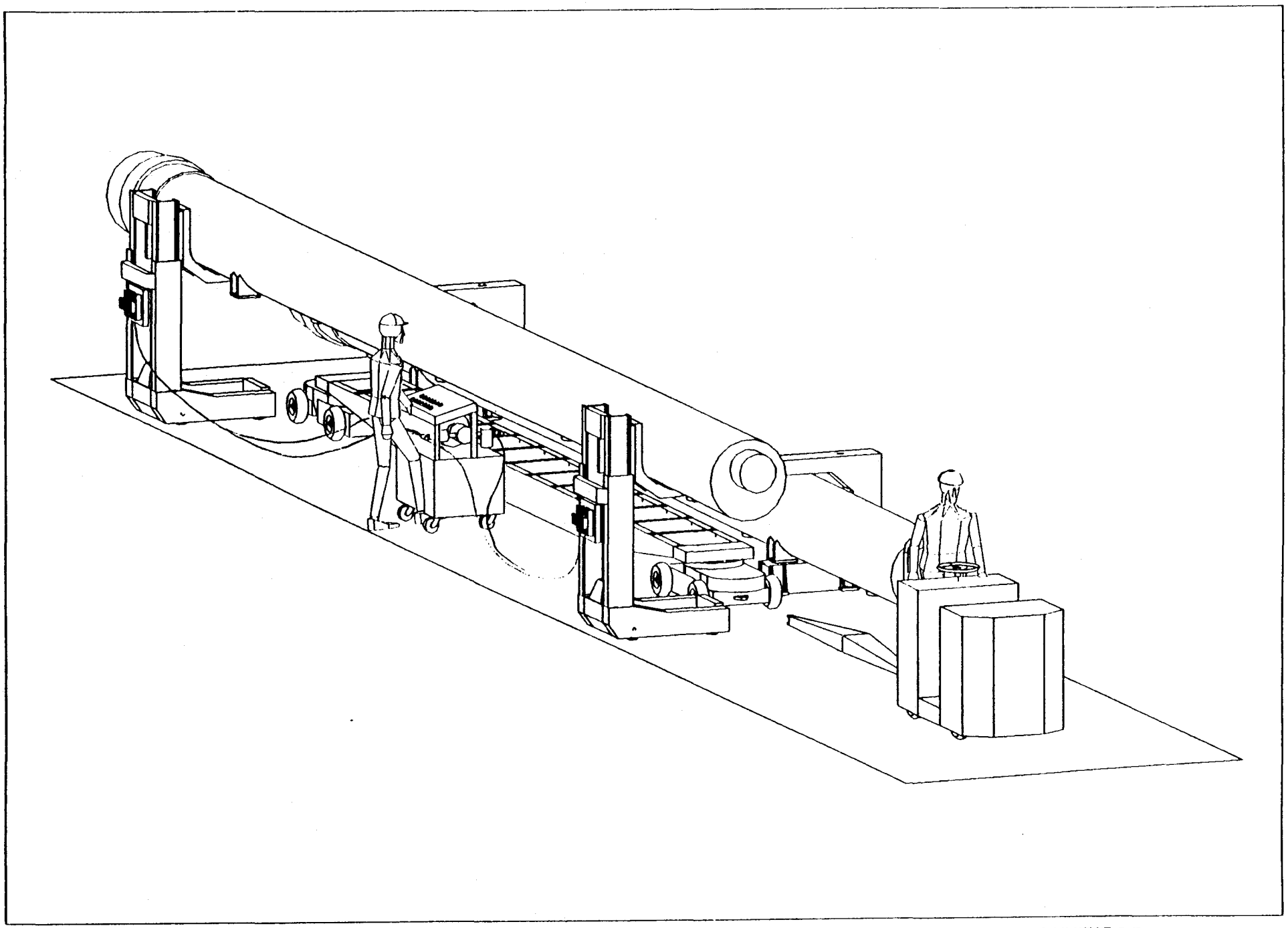

EXHIBIT 8.7

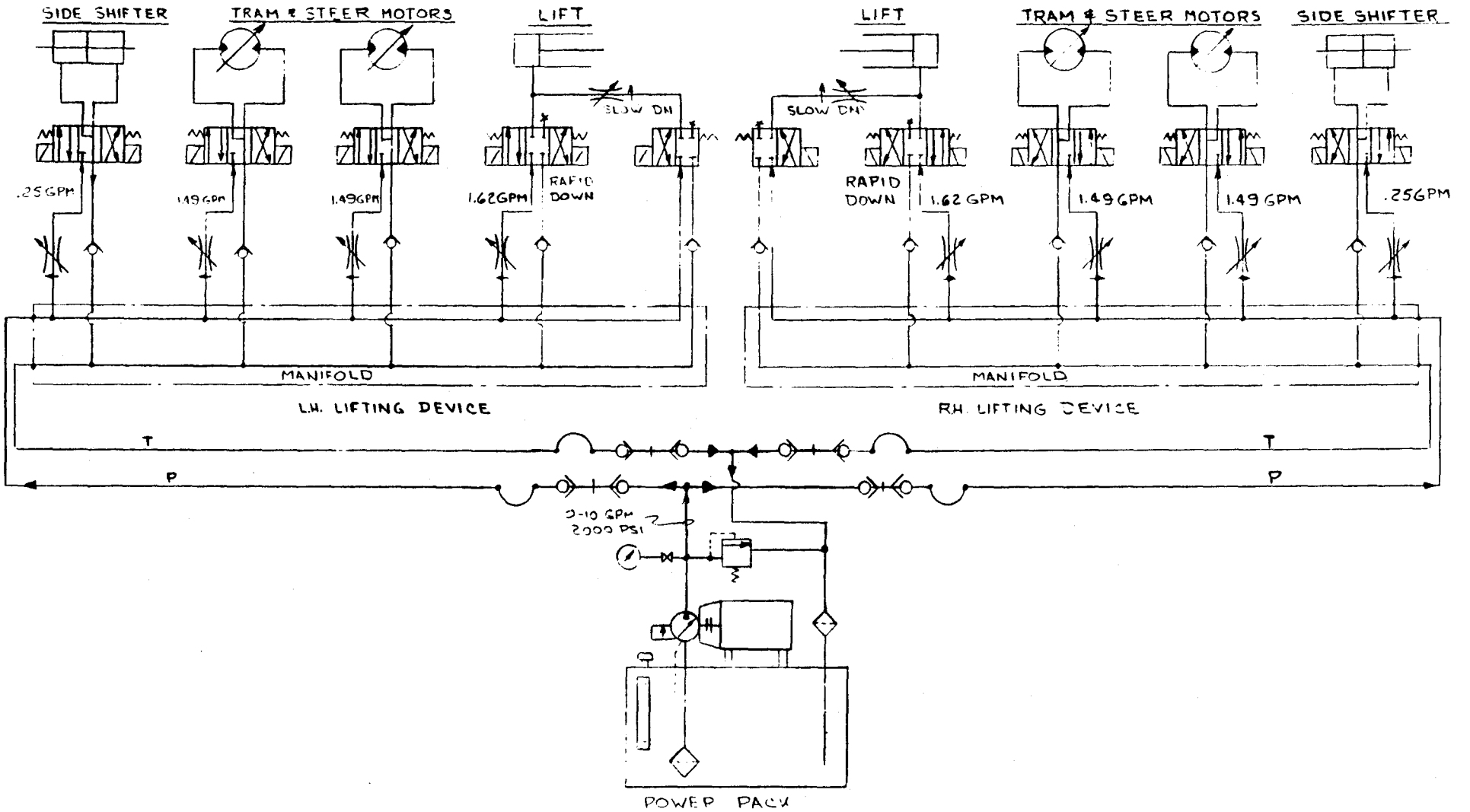

EXHIBIT 8.8
LIFTING DEVICE HYDRAULIC CONTROL CIRCUIT

MILLER FLUID POWER

Hydraulic System Price Slide Rule

Use Bottom Slide To Determine:

- Standard Cylinder Size and Price
- Required GPM and PSI
- Valve Size and Price

Use Top Slide To Determine:

- Nearest combination of standard pump size, motor horsepower, and RPM that will produce the required GPM and PSI.
- Prices for Pump, Motor, other Power Unit components, and price of complete Power Unit.

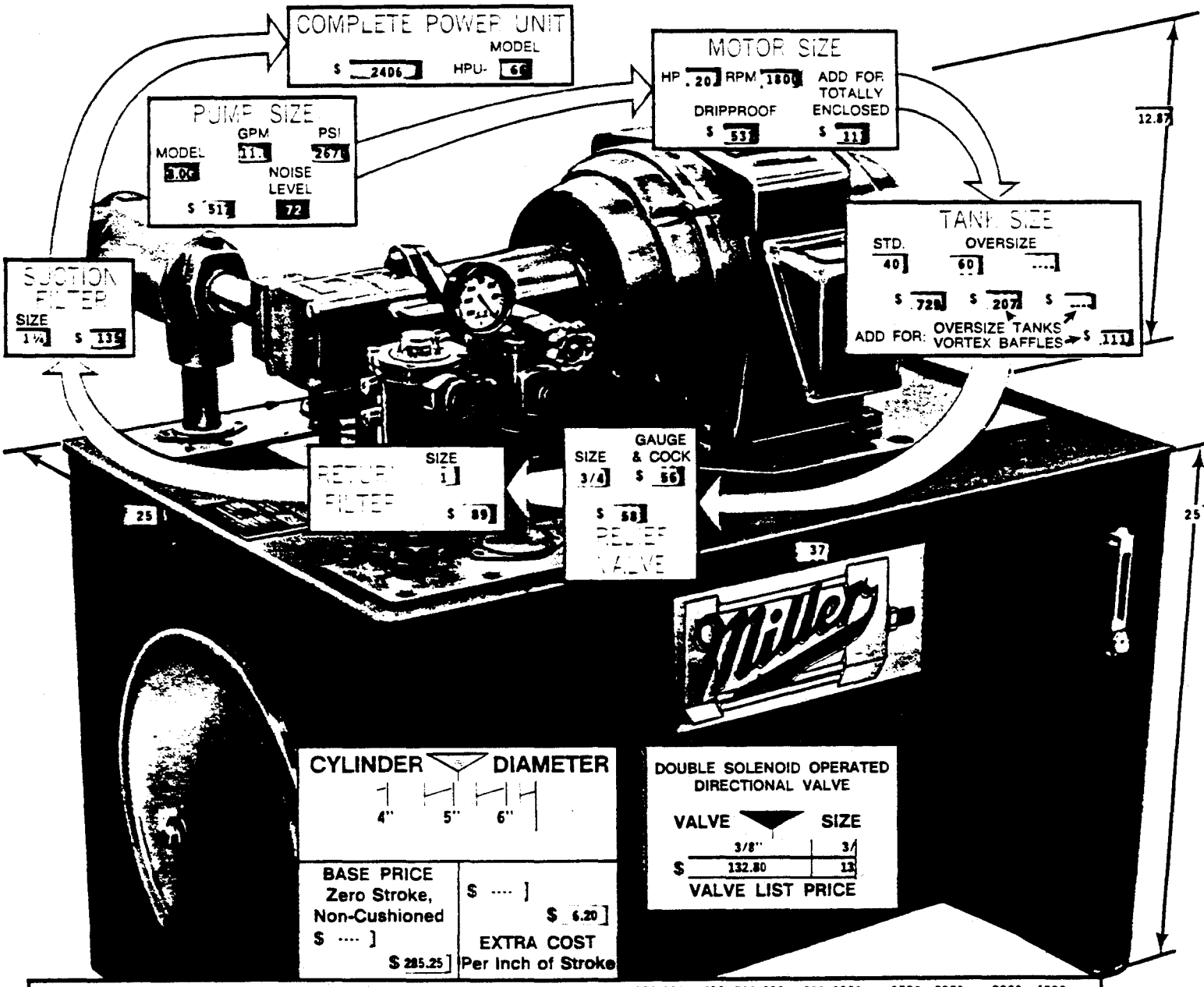

CYLINDER DIAMETER

4" 5" 6"

BASE PRICE Zero Stroke, Non-Cushioned	
$ ----]	$ ----]
$ 285.25]	$ 6.20] EXTRA COST Per Inch of Stroke

DOUBLE SOLENOID OPERATED DIRECTIONAL VALVE

VALVE	SIZE
3/8"	3/
$ 132.80	13

VALVE LIST PRICE

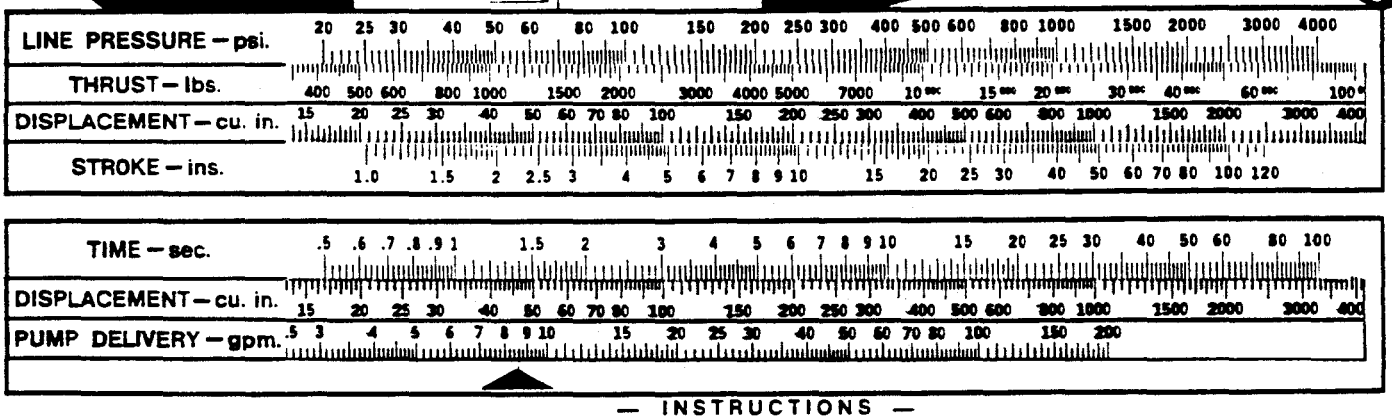

— INSTRUCTIONS —

1. Move the bottom slide so that cylinder diameter arrow is pointing to the black line indicating an exact cylinder size while your desired thrust is located as close as possible to a 1000 P.S.I. Green line is used for pull stroke calculations.
2. Record cylinder P.S.I., size, base price, and cost per inch of stroke.
3. Read total cubic inch displacement above cylinder stroke.
4. Move the slide so that the total cubic inch displacement is now located below the desired cylinder stroke time. Record the G.P.M. shown opposite the black arrow and also the valve size and price required for that G.P.M.
5. Move the top slide so that the G.P.M. and P.S.I. that was calculated from the horizontal slide. This gives you the size and price of the pump, motor, and all other components. Also the price of the complete power unit.
6. Alternate higher pressure systems are easily figured by merely setting the cylinder diameter indicator to the next standard smallest cylinder size and then following steps 2 to 5.
7. For multiple cylinder applications, figure the G.P.M. for each cylinder size and then locate the largest G.P.M. on the vertical slide.
8. When two or more cylinders operate at the same time, add their G.P.M.'s

EXHIBIT

Installation Dimensions — Single and Double Solenoid

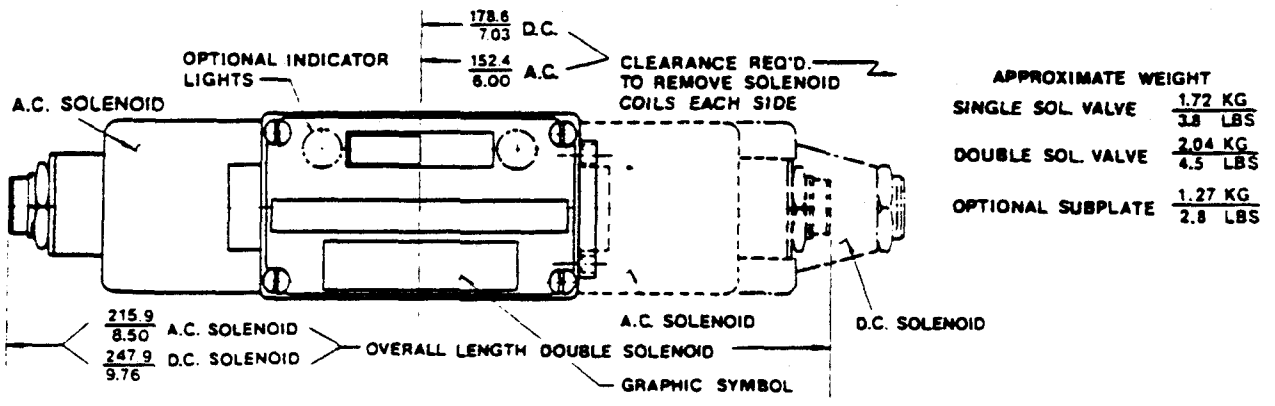

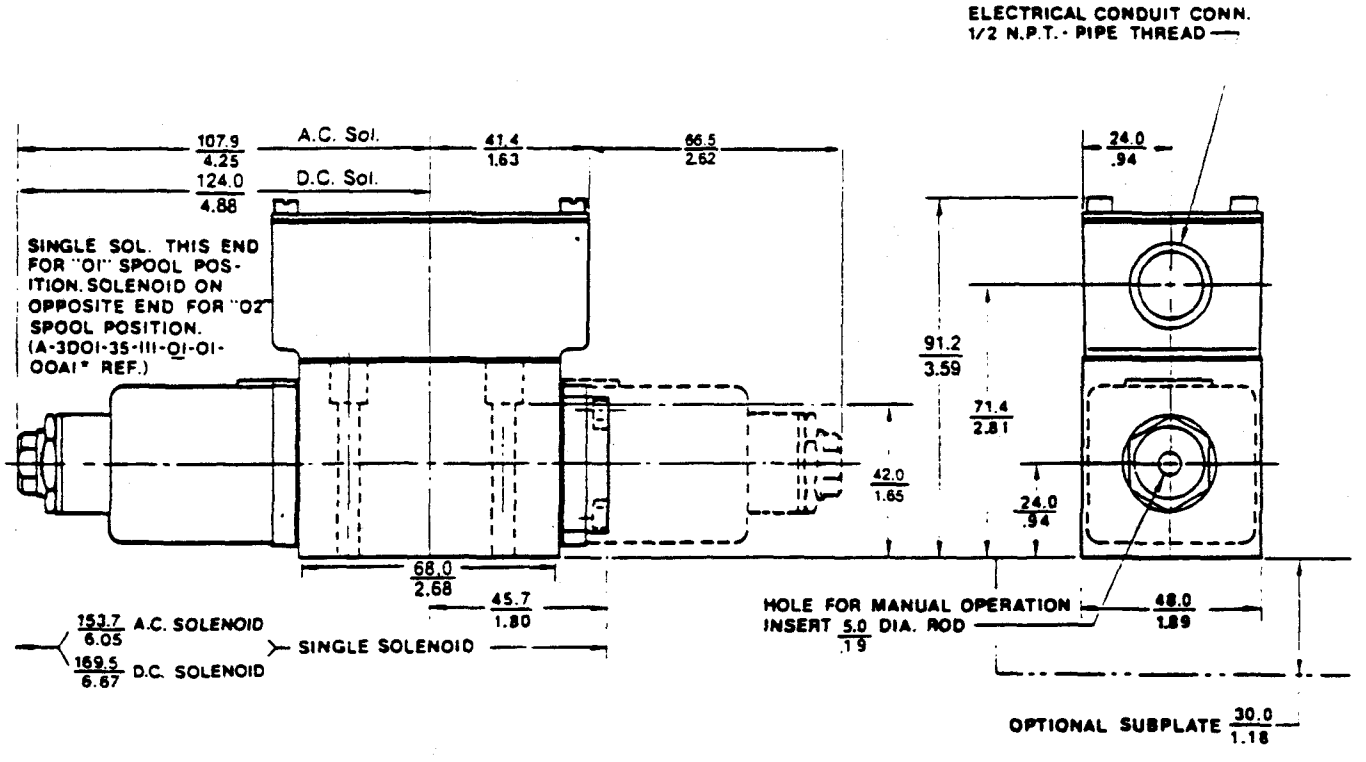

For hazardous duty solenoid valves please request these drawings from Denison.

Installation drawing 23-9508-D
Assembly drawing SD-0156-C

All dimensions are given MM / IN

Note: On all models shown when solenoid "A" is energized, flow is always P to A. When solenoid "B" is energized, flow is always P to B. Solenoid "A" and "B" are identified on the symbol plate on top of the valve.

Installation drawing 23-7963-C
Single Sol. Assembly drawing SD-01305
Double Sol. Assembly drawing SD-01306

EXHIBIT 8.10

Subplate

Optional subplate assemblies each include socket head cap screws for mounting the valve to the subplate.

Type*	Port Threads	Subplate Assembly Model No.	Code No.
Pipe	¼ NPTF	SSP04-G132	S16-39412

*SAE-6 Straight threaded subplate quoted upon request.
Installation Drawing 23-9095-C

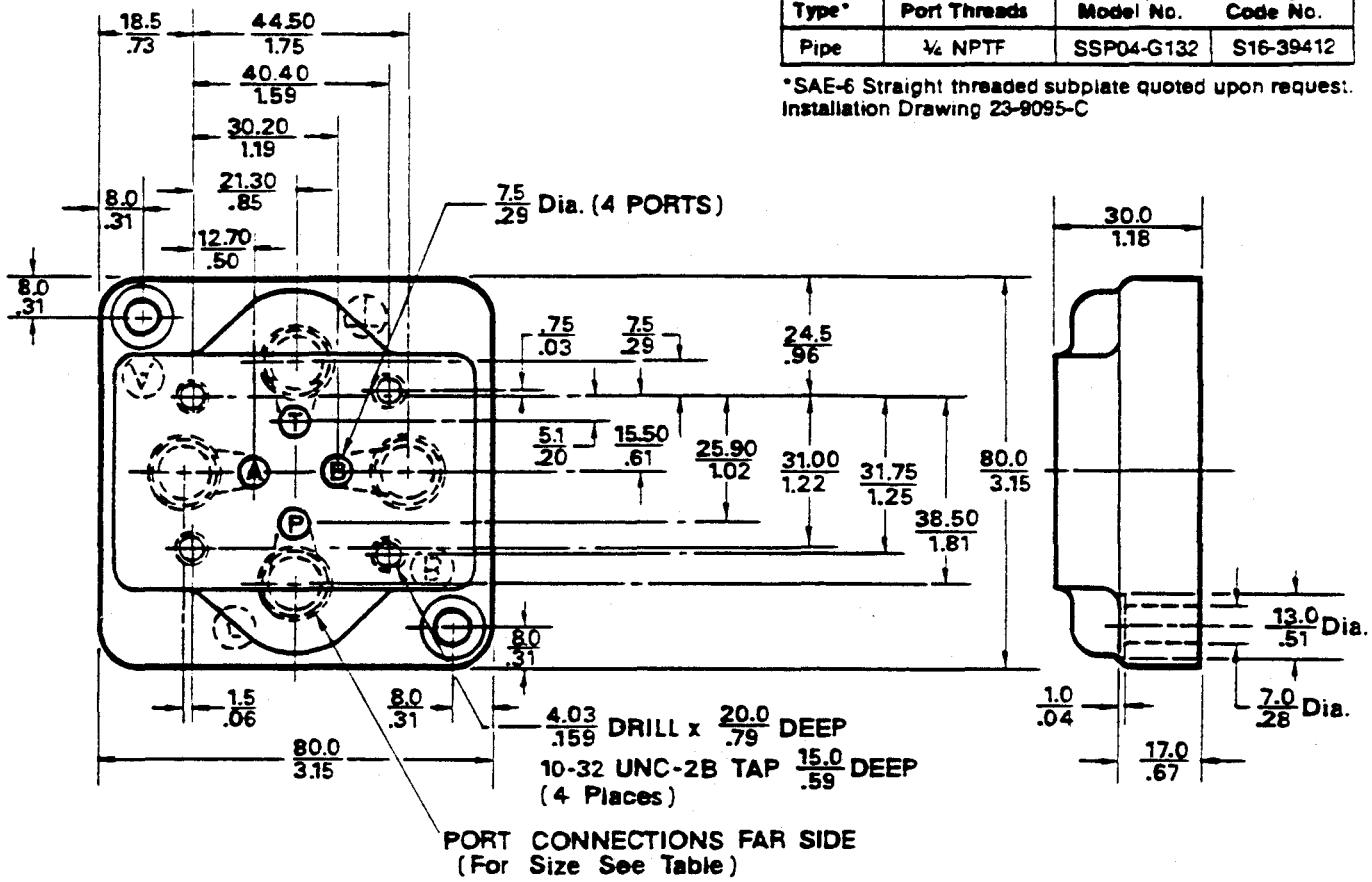

All dimensions are given MM/IN

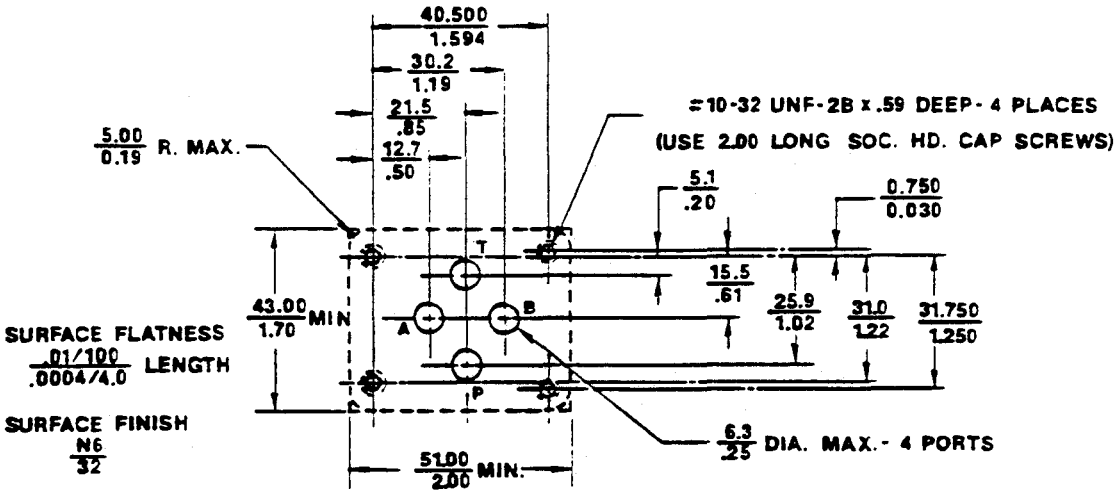

MOUNTING SURFACE-PER NFPA DO1

EXHIBIT 8.11

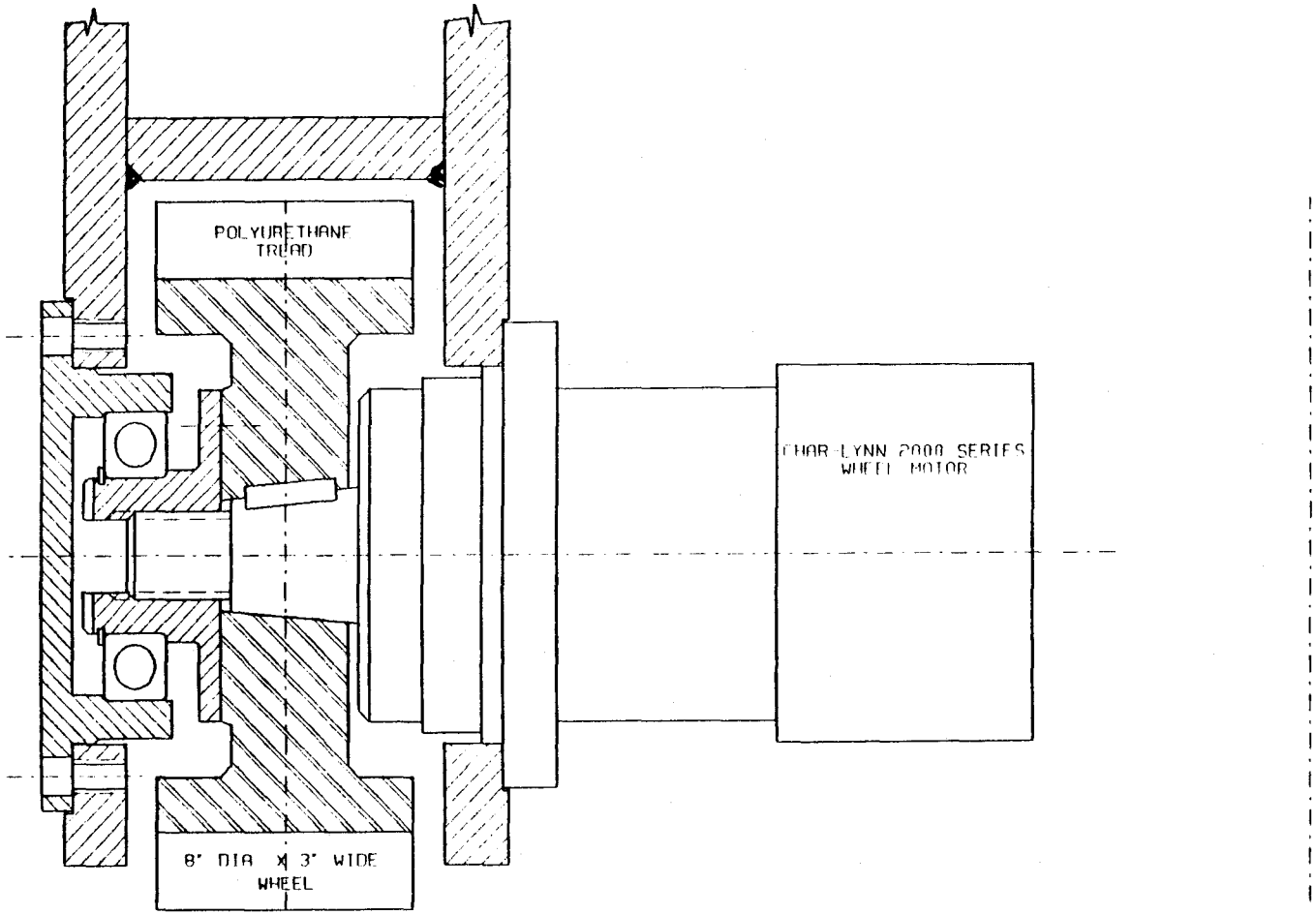

EXHIBIT 8.12
HYDRAULIC WHEEL DRIVE

Dimensions and Mounting Data – 2000 Series

Standard Motor

See page 12 for Flange Details

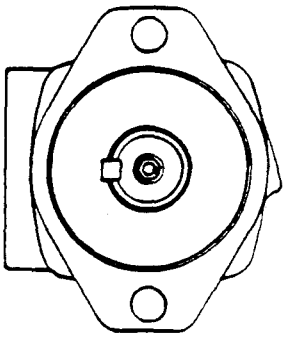

See Page 14 for Shaft Details

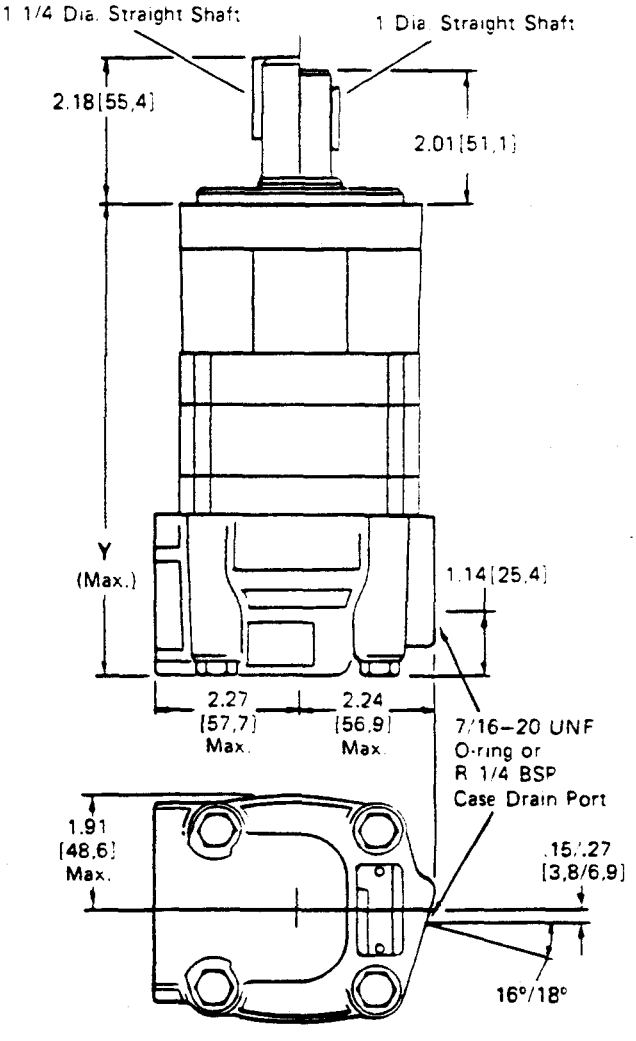

Dimension Y From Flange Mounting Surface for Staggered Ports								
	Displacement							
cu. in./rev.	4.9	6.2	8.0	9.6	11.9	14.9	18.7	24.0
cu. cm./rev.	80	100	130	155	195	245	305	395
inches	7.26	7.44	7.69	7.69	7.96	8.31	8.76	9.39
millimeters	184,5	189,0	195,4	195,4	202,2	211,1	222,6	238,6

Wheel Motor

See page 12 for Mounting Flange Details

See page 14 for Shaft Details

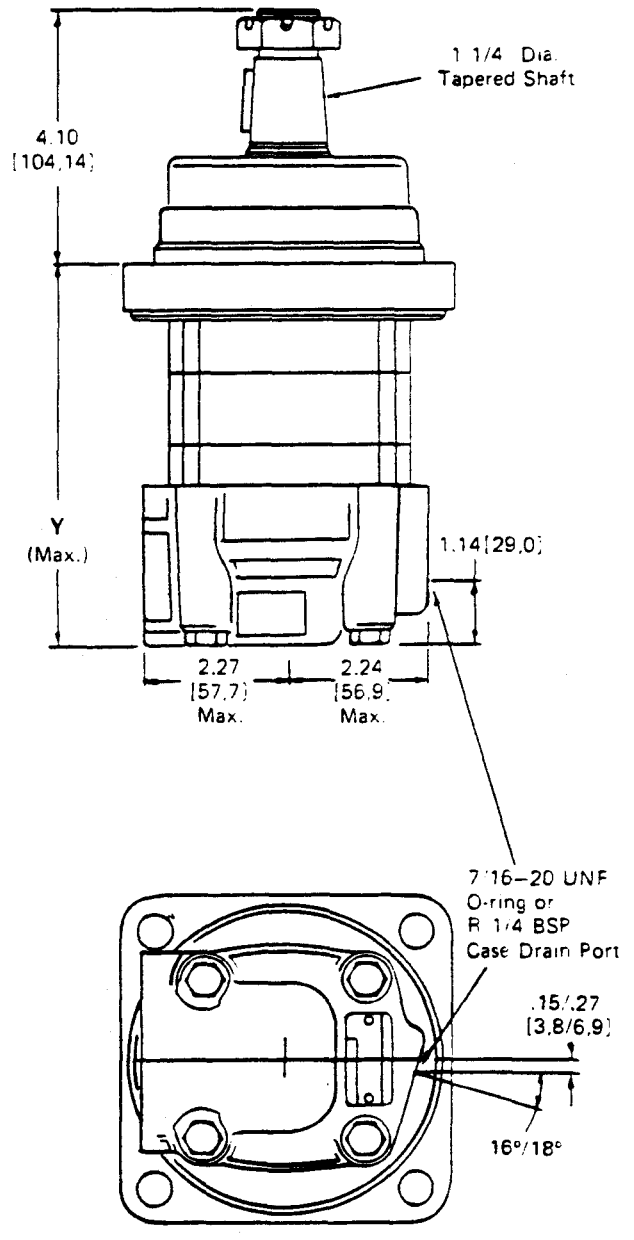

Dimension Y From Flange Mounting Surface for Staggered Ports								
	Displacement							
cu. in./rev.	4.9	6.2	8.0	9.6	11.9	14.9	18.7	24.0
cu. cm./rev.	80	100	130	155	195	245	305	395
inches	5.68	5.86	6.11	6.11	6.38	6.73	7.18	7.81
millimeters	144,3	148,9	155,2	155,2	162,1	171,0	182,4	198,4

EXHIBIT 8.1

Shafts

1 Straight

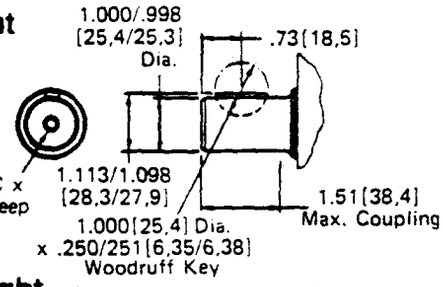

1¼ Straight

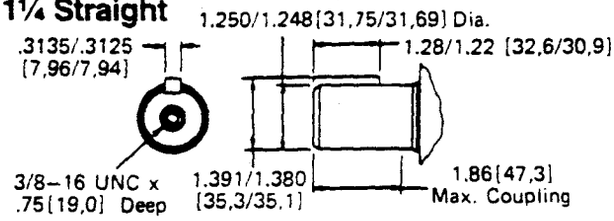

32 mm Straight

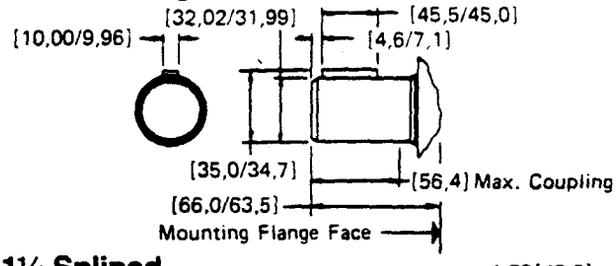

1¼ Splined

1.250[31,75] Dia. Flat Root Side Fit, 14 Tooth, 12/24 Spline to Fit ANSI B92.1 1976

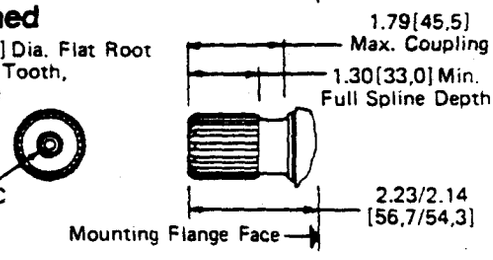

1¼ Tapered

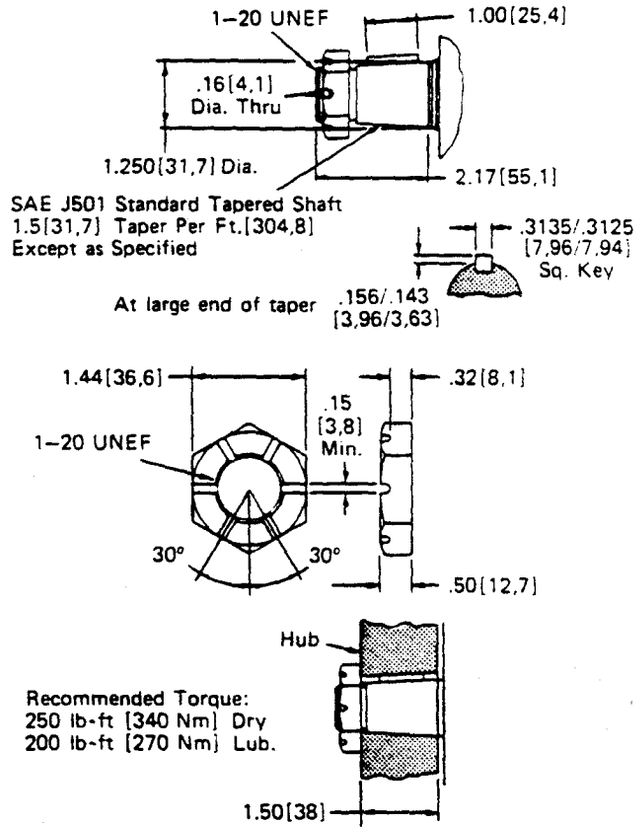

SAE 6B Splined

1.00[25,40] Dia.

This shaft is available with various motor combinations. For more information contact your Eaton representative.

Radial Load Capacity —(Also see chart on pg. 38)

@ 100 RPM

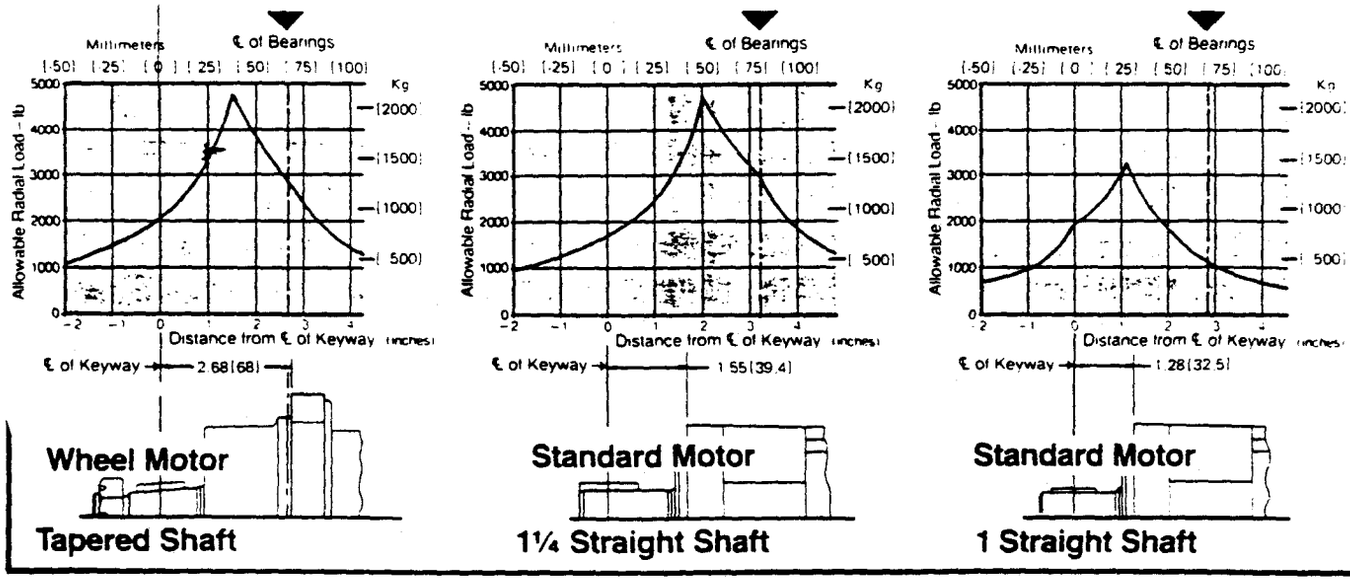

EXHIBIT 8.1

Specification Data

Performance Data

2000 Series

Displacement (cu. in./rev)		4.9	6.2	8.0	9.6	11.9	14.9	18.7	24.0
Max. Flow (GPM)	Continuous	20	20	20	20	20	20	20	20
	Intermittent	20	25	25	30	30	30	30	35
Max. Speed (RPM)	Continuous	908	742	576	447	385	308	246	191
	Intermittent	908	924	720	413	547	462	365	335
Max. △ Pressure (PSI) ☆ 1 1/4 Dia. Shaft	Continuous	3000	3000	3000	3000	3000	3000	3000	2250
	Intermittent	4500	4500	4500	3750	3750	3750	3500	2750
	Peak	4500	4500	4500	4500	4500	4500	4500	3250
Max. Torque (lb. in.) ☆ 1 1/4 Dia. Shaft	Continuous	2065	2638	3420	4040	4780	5850	6750	6840
	Intermittent	3040	3950	4990	5040	5890	7250	7820	8170
Max. Back Pressure (PSI)*		2000							

2000 Series (Metric)

Displacement (cu. cm/rev)		80	101	131	155	195	245	305	395
Max. Flow (lpm)	Continuous	75	75	75	75	75	75	75	75
	Intermittent	75	95	95	110	105	115	115	130
Max. Speed (rpm)	Continuous	908	742	576	447	385	308	246	191
	Intermittent	908	924	720	413	547	462	365	335
Max. Pressure (Bar) ☆ 32mm Dia. Shaft	Continuous	205	205	205	205	205	205	205	155
	Intermittent	310	310	310	260	260	260	240	190
	Peak	310	310	310	310	310	310	310	225
Max. Torque (Nm) ☆ 32mm Dia. Shaft	Continuous	235	300	385	435	540	660	760	770
	Intermittent	345	445	565	570	665	820	885	925
Max. Back Pressure (Bar)*		140							

☆ Maximum torque and flow must not occur simultaneously. For permissible continuous and intermittent operating combinations of pressure and flow refer to performance data on following pages.

6 ☆ Maximum torque for 1 in. [25 mm] diameter shaft = 3500 lb. in. [395 Nm] continuous/4300 lb. in. [485 Nm] intermittent.

* For continuous back pressure over 2000 PSI [140 Bar] use an external case drain. Install case drain lines so that the motor case remains filled at all times.

Maximum inlet pressure 4500 PSI [310 Bar]. Do not exceed △ Pressure rating above

* Maximum return pressure 4500 PSI [310 Bar]. Do not exceed △ Pressure rating above

Intermittent conditions are to be less than 10% of every minute

Peak conditions are to be less than 1% of every minute

Recommended maximum system operating temperature 180° F [82° C]

Recommended minimum viscosity = 70 SUS [13cSt] at operating temperature. For more information on operating Char-Lynn motors with petroleum base fluids see Service Bulletin 1032

Recommended filtration 10 micrometer

For frequent peak pressure conditions or flow and pressures beyond peak ratings consult your Eaton representative.

> To assure optimum motor life, run motor for approximately one hour at 30% of rated pressure before application of full load. Be sure motor is filled with fluid prior to any load applications.

EXHIBIT 8.15

☐ Continuous

■ Intermittent

Bearingless Motor performance data is the same as data for 1 1/4[31,75] Dia. output shaft.

4.9 cu. in./rev. [80 cu. cm./rev.]

Pressure

Flow GPM [LPM] \ Bar / PSI	35 / 500	70 / 1000	105 / 1500	140 / 2000	170 / 2500	205 / 3000	240 / 3500	275 / 4000	310 / 4500
[.95] .25	[25] 210 3	[45] 420 1	[Nm / lb in / RPM] Torque / Speed						
[1.9] .5	[30] 250 17	[50] 500 8	[85] 740 3						
[3.8] 1	[35] 330 44	[75] 670 40	[110] 990 37	[145] 1300 34	[175] 1550 28	[205] 1800 22			
[7.5] 2	[35] 330 90	[75] 670 85	[110] 995 81	[150] 1310 78	[180] 1580 72	[210] 1840 65			
[15] 4	[35] 325 182	[75] 670 176	[115] 1005 170	[150] 1330 166	[185] 1620 159	[215] 1920 152			
[23] 6	[35] 320 273	[75] 665 267	[115] 1010 259	[150] 1340 254	[185] 1655 246	[225] 1975 238			
[30] 8	[35] 310 365	[75] 660 357	[115] 1015 349	[150] 1345 341	[190] 1685 333	[230] 2020 325			
[38] 10	[35] 300 456	[75] 650 448	[115] 1010 439	[155] 1350 429	[190] 1700 420	[230] 2050 411			
[45] 12	[30] 285 547	[70] 640 537	[115] 1005 530	[155] 1350 516	[195] 1705 507	[235] 2065 497			
[53] 14	[30] 270 638	[70] 625 629	[110] 990 622	[150] 1340 603	[195] 1705 593	[235] 2065 584			
[61] 16	[30] 255 729	[70] 610 720	[110] 975 714	[150] 1330 689	[190] 1695 679	[230] 2055 670			
[68] 18	[25] 230 818	[65] 590 810	[110] 955 795	[150] 1310 775	[190] 1680 765	[230] 2025 756			
[76] 20	[25] 210 908	[65] 570 901	[105] 930 880	[145] 1290 861	[185] 1645 851	[225] 1985 842			

6.2 cu. in. rev. [100 cu. cm. rev.]

Pressure

Flow GPM [LPM] \ Bar / PSI	15 / 250	35 / 500	70 / 1000	105 / 1500	140 / 2000	170 / 2500	205 / 3000	240 / 3500	275 / 4000	310 / 4500
[.95] .25	[15] 140 4	[30] 260 2	[Nm / lb in / RPM] Torque / Speed							
[1.9] .5	[15] 150 13	[35] 300 9	[70] 620 5	[105] 940 2						
[3.8] 1	[20] 170 35	[45] 390 34	[95] 830 31	[135] 1210 28	[175] 1570 23	[210] 1870 15	[240] 2130 6			
[7.5] 2	[20] 170 73	[45] 390 71	[95] 830 68	[140] 1220 63	[180] 1590 59	[215] 1920 51	[250] 2220 38			
[15] 4	[20] 170 148	[45] 380 145	[90] 820 141	[140] 1240 136	[185] 1640 131	[225] 2010 121	[270] 2380 104			
[23] 6	[20] 160 222	[45] 380 219	[90] 820 215	[140] 1260 209	[190] 1670 202	[235] 2080 192	[280] 2480 172			
[30] 8	[15] 150 297	[40] 370 294	[90] 810 288	[140] 1260 281	[190] 1700 273	[240] 2130 261	[290] 2560 243			
[38] 10	[15] 140 371	[40] 360 368	[90] 810 362	[145] 1270 354	[195] 1720 344	[245] 2160 330	[295] 2610 316			
[45] 12	[15] 120 445	[40] 350 442	[90] 800 436	[145] 1270 427	[195] 1730 415	[245] 2180 399	[295] 2630 389			
[53] 14	[10] 110 519	[35] 330 516	[90] 800 509	[140] 1260 500	[195] 1740 486	[245] 2180 469	[295] 2630 463			
[61] 16	[10] 90 594	[35] 320 591	[90] 780 583	[140] 1260 573	[195] 1720 558	[245] 2160 540	[295] 2610 537			
[68] 18	[10] 70 668	[35] 300 665	[85] 770 657	[140] 1240 646	[190] 1700 630	[240] 2140 611	[290] 2580 609			
[76] 20	[5] 60 742	[30] 280 739	[80] 730 731	[135] 1180 715	[185] 1630 703	[235] 2090 684	[290] 2550 682			
[83] 22										
[91] 24										
[95] 25										

8.0 cu. in. rev. [130 cu. cm./rev.]

Pressure

Flow GPM [LPM] \ Bar / PSI	15 / 250	35 / 500	70 / 1000	105 / 1500	140 / 2000	170 / 2500	205 / 3000	240 / 3500	275 / 4000	310 / 4500
[.95] .25	[20] 170 3	[Nm / lb in / RPM] Torque / Speed								
[1.9] .5	[20] 190 12	[45] 410 8	[100] 870 2							
[3.8] 1	[25] 230 28	[60] 510 27	[120] 1070 23	[180] 1580 19	[230] 2050 16	[285] 2520 13	[330] 2920 9			
[7.5] 2	[25] 230 56	[60] 510 56	[120] 1080 53	[180] 1600 47	[235] 2090 42	[290] 2580 39	[330] 2930 36			
[15] 4	[25] 220 114	[55] 500 113	[120] 1080 111	[185] 1620 104	[245] 2150 97	[300] 2660 95	[350] 3100 92			
[23] 6	[25] 220 172	[55] 490 171	[120] 1080 169	[185] 1640 161	[245] 2190 153	[310] 2740 149	[370] 3260 146			
[30] 8	[25] 200 230	[55] 480 224	[120] 1080 222	[185] 1650 219	[250] 2220 210	[315] 2780 204	[375] 3310 201			
[38] 10	[20] 180 287	[55] 470 286	[120] 1070 282	[185] 1650 276	[250] 2230 269	[315] 2800 261	[385] 3420 255			
[45] 12	[20] 160 345	[50] 460 344	[120] 1060 338	[185] 1640 333	[250] 2230 327	[315] 2800 317	[380] 3350 307			
[53] 14	[15] 150 403	[50] 440 402	[115] 1030 395	[185] 1620 391	[250] 2220 385	[340] 3000 373	[380] 3350 360			
[61] 16	[15] 130 461	[45] 420 460	[115] 1010 452	[180] 1600 447	[250] 2200 443	[315] 2780 430	[375] 3330 411			
[68] 18	[10] 110 518	[45] 400 517	[110] 990 509	[180] 1580 504	[245] 2160 500	[310] 2750 484	[375] 3300 471			
[76] 20	[10] 90 576	[45] 380 575	[110] 960 568	[175] 1550 560	[240] 2130 551	[305] 2710 539	[370] 3280 524			
[83] 22										
[91] 24										
[95] 25										

9.6 cu. in. rev. [155 cu. cm. rev.]

Pressure

Flow GPM [LPM] \ Bar / PSI	15 / 250	35 / 500	70 / 1000	105 / 1500	140 / 2000	170 / 2500	205 / 3000	240 / 3500	260 / 3750
[.95] .25	[25] 200 3	[Nm / lb in / RPM] Torque / Speed							
[1.9] .5	[25] 240 9	[55] 490 7	[110] 990 5	[175] 1570 3	[240] 2140 1				
[3.8] 1	[30] 280 23	[65] 590 21	[130] 1170 19	[195] 1730 17	[260] 2290 13	[320] 2830 8	[375] 3330 3		
[7.5] 2	[35] 300 46	[70] 610 45	[135] 1210 42	[200] 1790 39	[265] 2350 35	[330] 2920 34	[395] 3480 33		
[15] 4	[35] 320 93	[70] 630 92	[140] 1260 88	[215] 1890 85	[285] 2530 79	[360] 3170 77	[430] 3820 75		
[23] 6	[35] 320 142	[75] 650 140	[145] 1300 137	[220] 1960 131	[295] 2620 124	[370] 3280 118	[445] 3940 113		
[30] 8	[35] 310 190	[75] 650 187	[150] 1330 184	[225] 2010 178	[300] 2670 170	[375] 3330 166	[450] 4000 164		
[38] 10	[35] 290 237	[70] 640 235	[150] 1340 231	[230] 2030 226	[320] 2850 217	[385] 3410 212	[455] 4030 205		
[45] 12	[30] 270 286	[70] 620 283	[150] 1320 279	[230] 2030 274	[305] 2700 285	[380] 3370 254	[455] 4040 246		
[53] 14	[25] 240 334	[65] 590 331	[145] 1300 326	[230] 2020 322	[305] 2690 312	[380] 3360 305			
[61] 16	[25] 220 382	[65] 570 378	[145] 1270 374	[225] 1980 369	[300] 2660 360	[375] 3330 349			
[68] 18	[20] 190 429	[60] 540 426	[140] 1240 422	[220] 1960 416	[300] 2640 407	[375] 3320 394			
[76] 20	[20] 170 477	[60] 510 474	[135] 1210 469	[215] 1920 462	[300] 2630 451	[375] 3310 440			
[83] 22									
[91] 24									
[95] 25									
[114] 30									

EXHIBIT 8.16

DROP FORGED STEEL WHEELS

Series W-FS—
Cap. to 15,000 lbs.

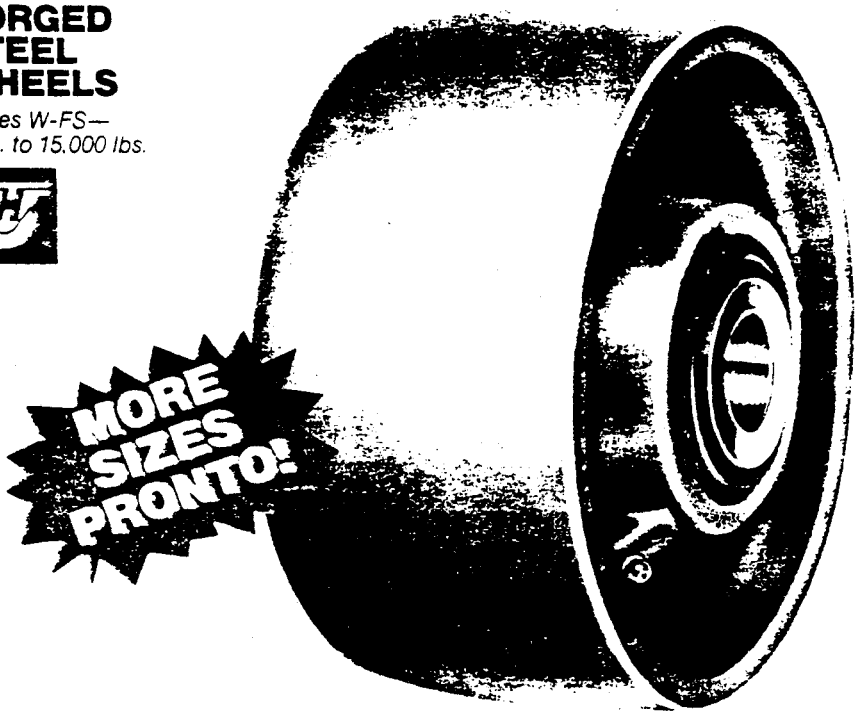

Drop forging produces the ultimate tensile strength in industrial wheels. Coupled with solid billet design, this makes Hamilton Drop Forged Steel Wheels virtually indestructible. Consequently load limits are governed by *bearing* capacity.

Wheel treads are machined smooth and concentric with a slight crown that lessens energy requirements by aiding turnability under heavy loads. All sizes above 6" x 2" are available with precision tapered roller bearings in order to realize maximum benefits from the capacity potentials. All the wheels listed below come with machine gray enamel finish, and with ball-check lubrication fittings installed in the hubs.

Flanged and V-Grooved wheels of drop forged steel are also available—see catalog pages 43-46.

TO ORDER, COMPLETE CATALOG NUMBER BY ADDING BEARING SIZE. EXAMPLE: W-840-FST-1¼.

★ = available as PRONTO! with bearings as shown

DIMENSIONS IN INCHES (Metrics, see pg. 13)

Diam.	Face	Hub Length	Straight Roller Bearings: Capacity Lbs.	Straight Roller Bearings: Bearing Sizes	Straight Roller Bearings: Catalog Number	Tapered Roller Bearings: Capacity Lbs.	Tapered Roller Bearings: Bearing Sizes	Tapered Roller Bearings: Catalog Number	Wt. Lbs.
6	2	2¼	2000	⅝-[illegible]-⅞-1	★W-6-FS-	X	X	X	6¾
	3	3¼	4500†	[illegible]-1⅛-[illegible]-1½	★W-630-FSH-	10,000±	¾-1-[illegible]	★W-630-FST-	23
8	2¼	2[illegible]	X	X	X	§	§	W-822-FST-	23
	3	3¼	4800†	[illegible]-1⅛-[illegible]-1½	★W-830-FSH-	6,000±	¾-1-[illegible]	★W-830-FST-	22
	4	4¼	6500†	1¼-1½	W-840-FSH-	14,000	[illegible]	★W-840-FST-[illegible]	35
10	2¼	3 1/16	X	X	X	§	§	W-1022-FST-	42
	3	3¼	5500†	[illegible]-1⅛-[illegible]-1½	★W-1030-FSH-	6,500±	¾-1-[illegible]	★W-1030-FST-	31
	4	4¼	7500†	1¼-1½	W-1040-FSH-	15,000	[illegible]	★W-1040-FST-[illegible]	47
***STEELTEST* WHEEL (Steeltest is ductile iron, class 80-60-03).**									
12*	4*	4¼	5000	1-1⅛-1¼-1½	W-124-SDH-	5,000	1-1¼	W-124-SDT-	36

†Based on 1400 hours of bearing life at 1 m.p.h., or 610 hours of life at 2 m.p.h. using largest bearing size. Bearing capacities depend upon the interrelationships of load, speed and life—e.g., load can be increased 50% if designing for only 500 hours of life at 2 m.p.h.; or load can be increased approximately 1000 lbs. by reducing speed to 1 m.p.h. Other rules of thumb: reducing load by one half increases life by ten times; reducing speed by one half doubles the life.

±Based on largest bearing size and 1500 hours of life at 2 m.p.h.

§Designed primarily for use on snowplows; bearing specifications to suit, minimum quantity 100.

*Runs undersize after machining.

SUPERLAST® WHEELS

Series W-SY—
Cap. to 6,000 lbs.

For the extra tough jobs requiring protective polyurethane treads, Hamilton manufactures these top-of-the-line *Superlast*® Wheels. The extra-thick (1") blue treads are liquid cast and chemically bonded to solid-web, drop forged steel centers. Precision tapered roller bearings are standard, making these high capacity wheels ideal for power towing at limited speeds. Ball-check lubrication fittings are provided in the hubs.

For casters utilizing these wheels, see pages 17, 18 and 19.

TO ORDER, ADD BEARING SIZE TO CATALOG NUMBER.

DIMENSIONS IN INCHES (Metrics, see pg. 13)

Diam.	Face	Hub Length	Capacity Lbs.	Tapered Bearing Sizes	Catalog Number	Wt. Lbs.
8	3	3¼	3500	¾-1-1¼	W-830-SYT-	26
10	4	4¼	5000	1¼	W-1040-SYT-1¼	45
12	4	4¼	6000	1¼	W-1240-SYT-1¼	60

EXHIBIT 8.17

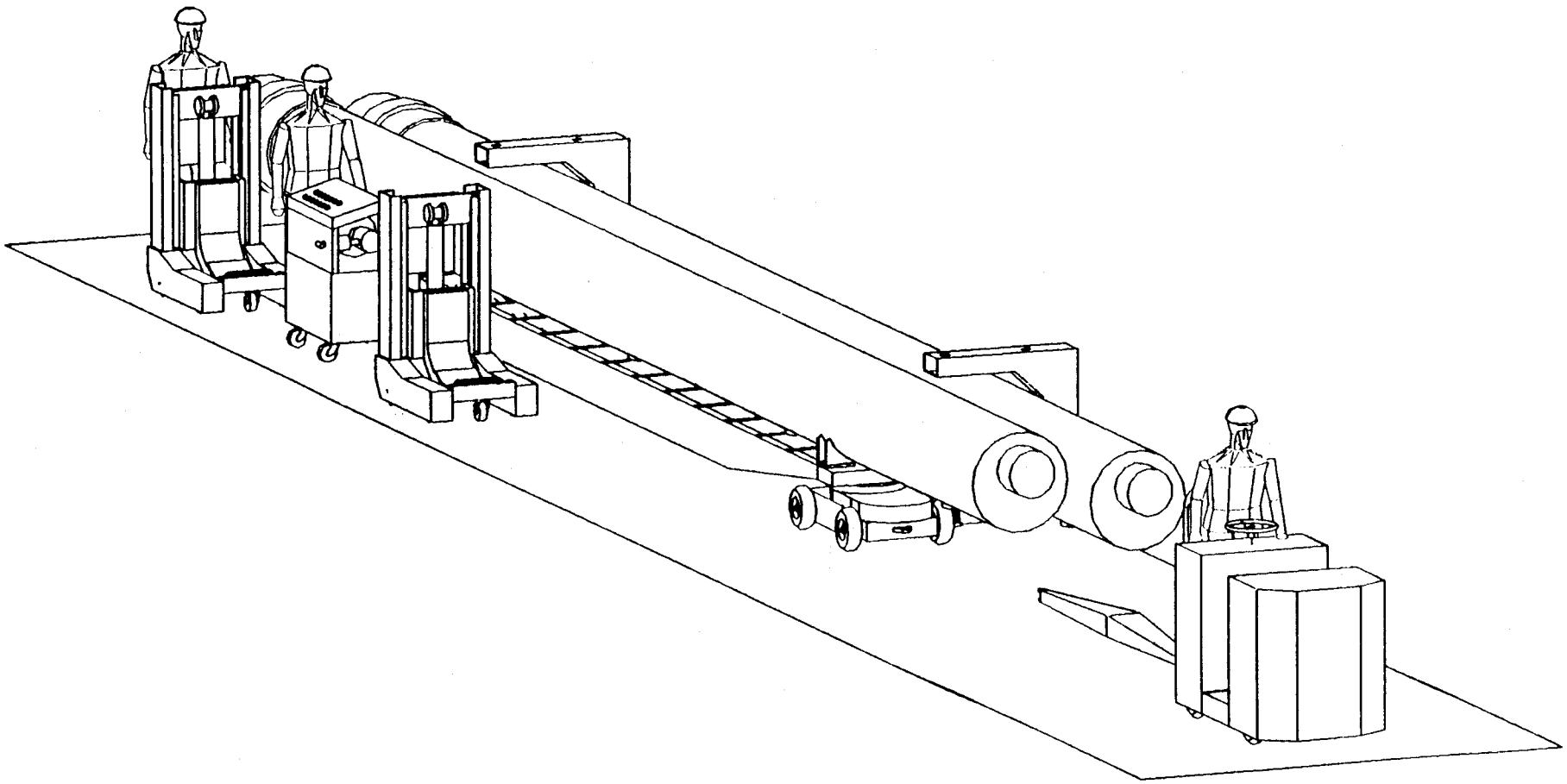

EXHIBIT 8.18
MAGNET-LIFTING SYSTEM BEING BROUGHT INTO POSITION

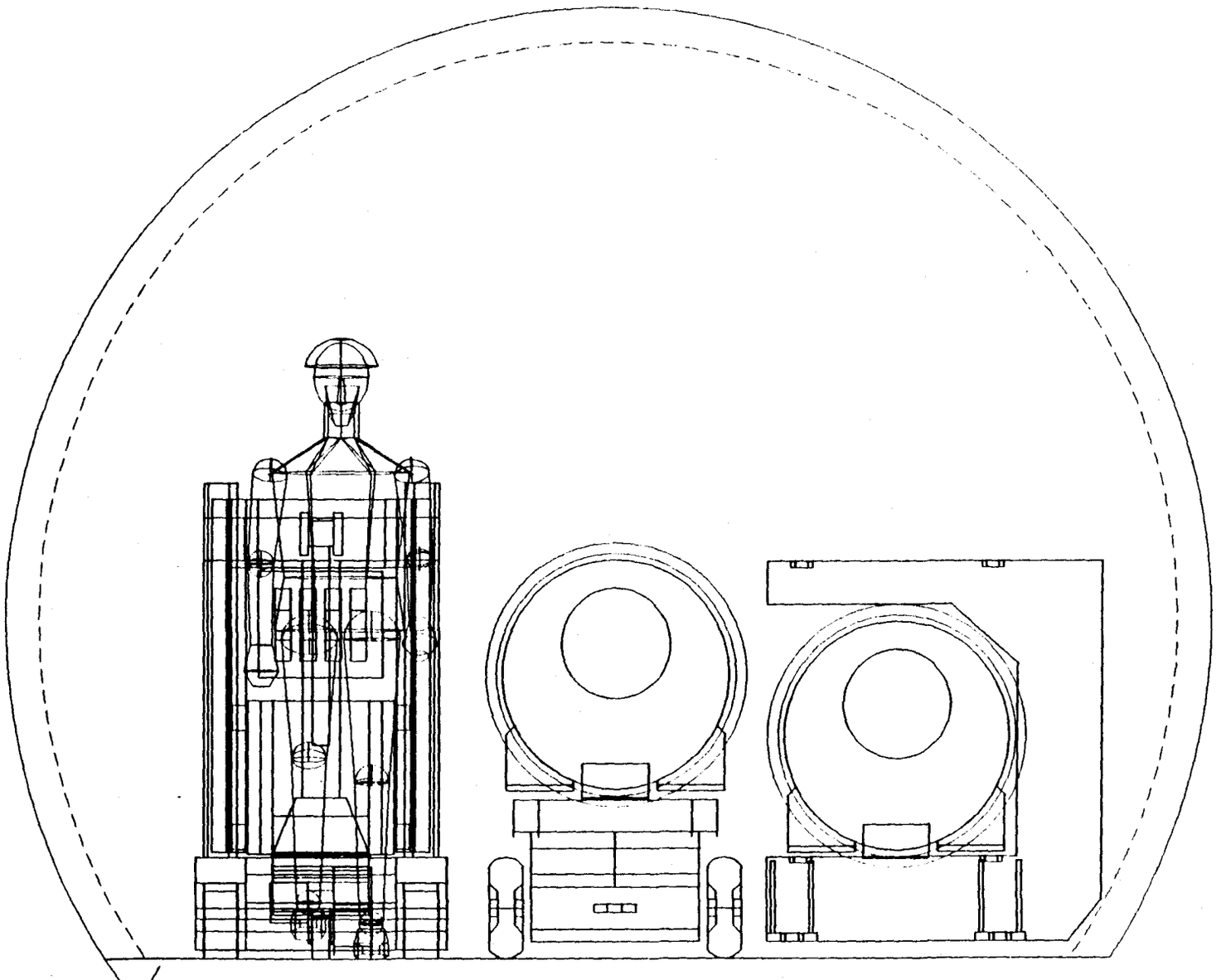

EXHIBIT 8.19
TUNNEL CROSS SECTION
MAGNET-LIFTING SYSTEM
BEING BROUGHT INTO POSITION

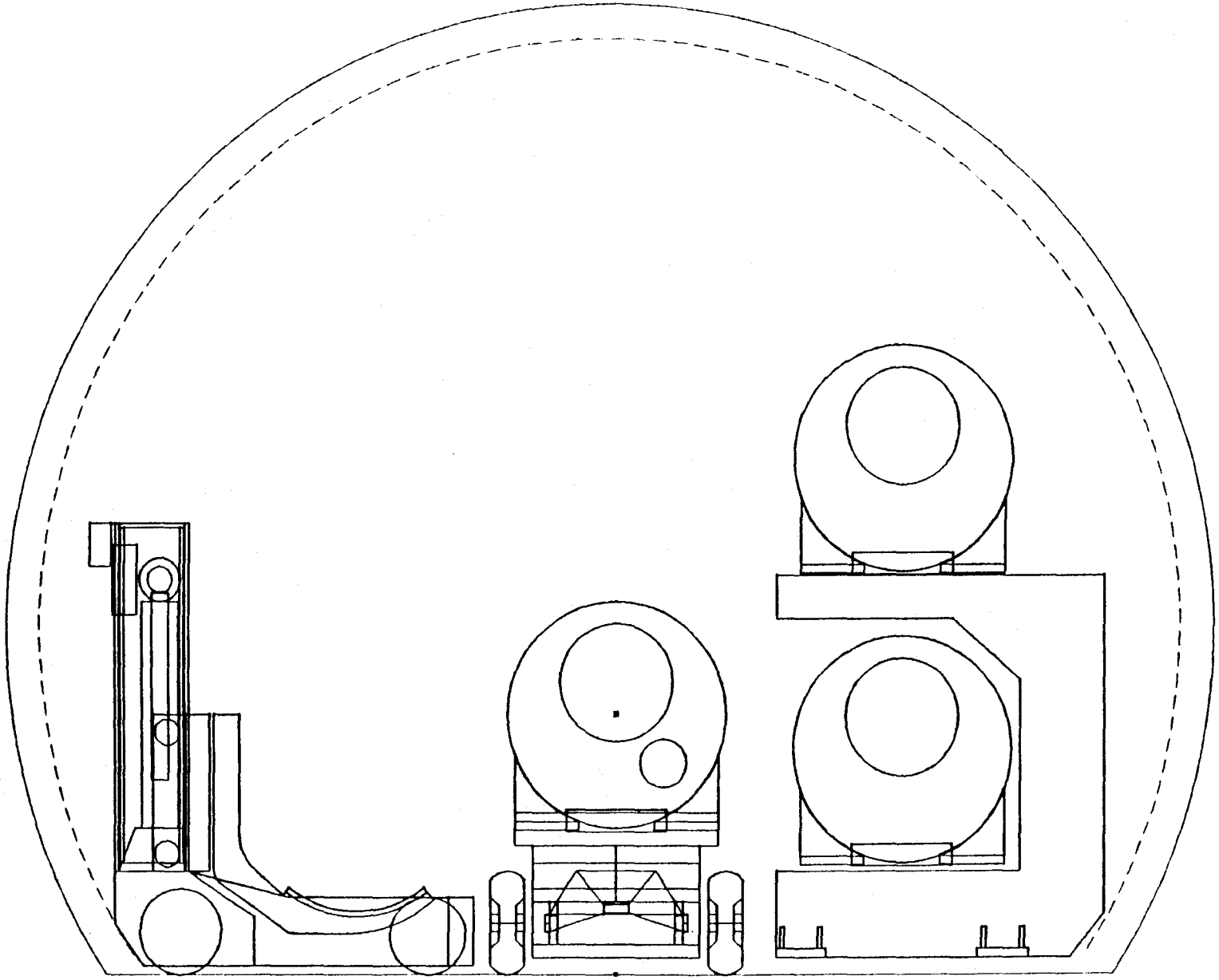

EXHIBIT 8.20
TUNNEL CROSS SECTION
LIFTING DEVICE TURNED
90 DEGREES

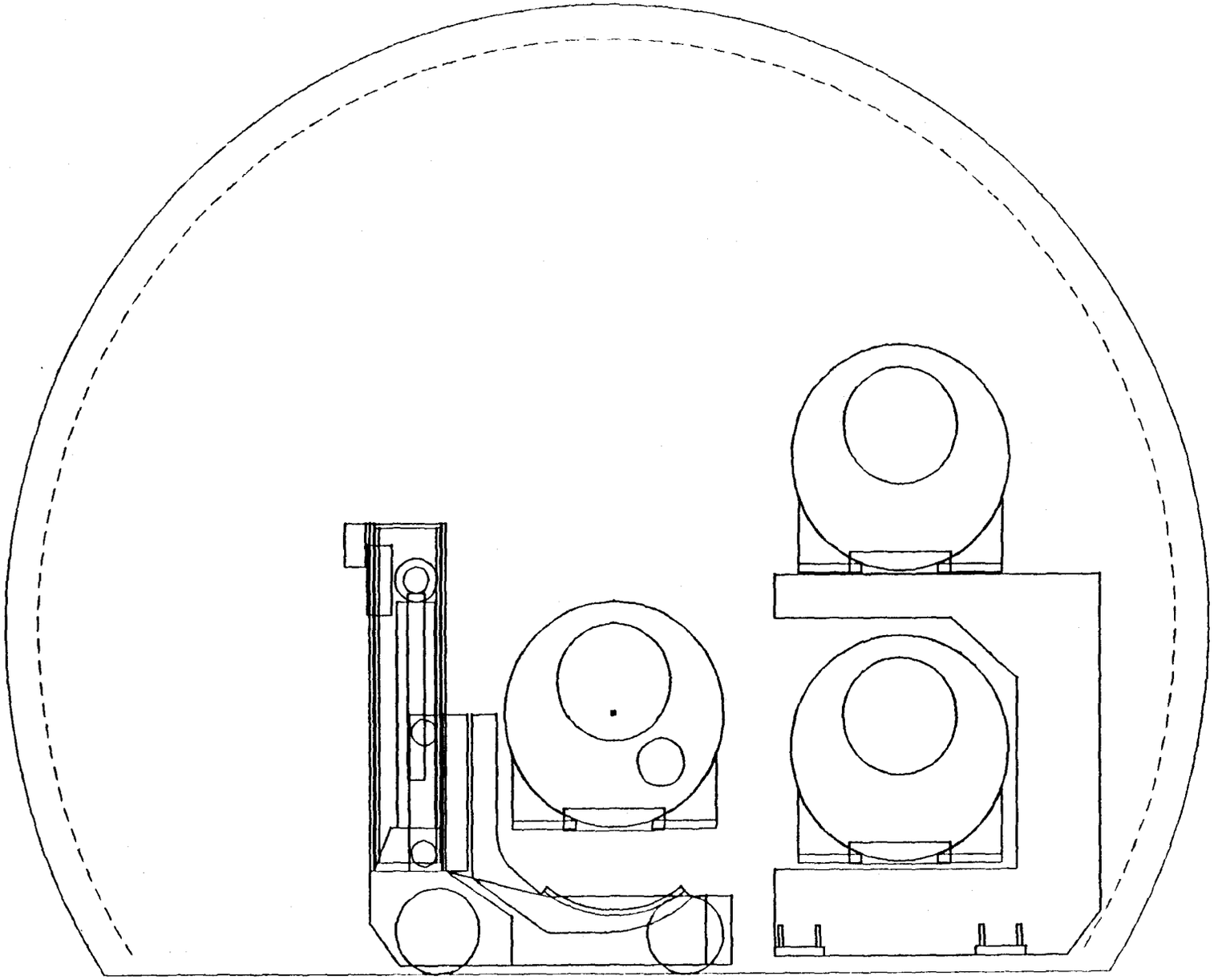

EXHIBIT 8.21
TUNNEL CROSS SECTION
LIFTING DEVICE POSITIONED
FOR LIFTING MAGNET

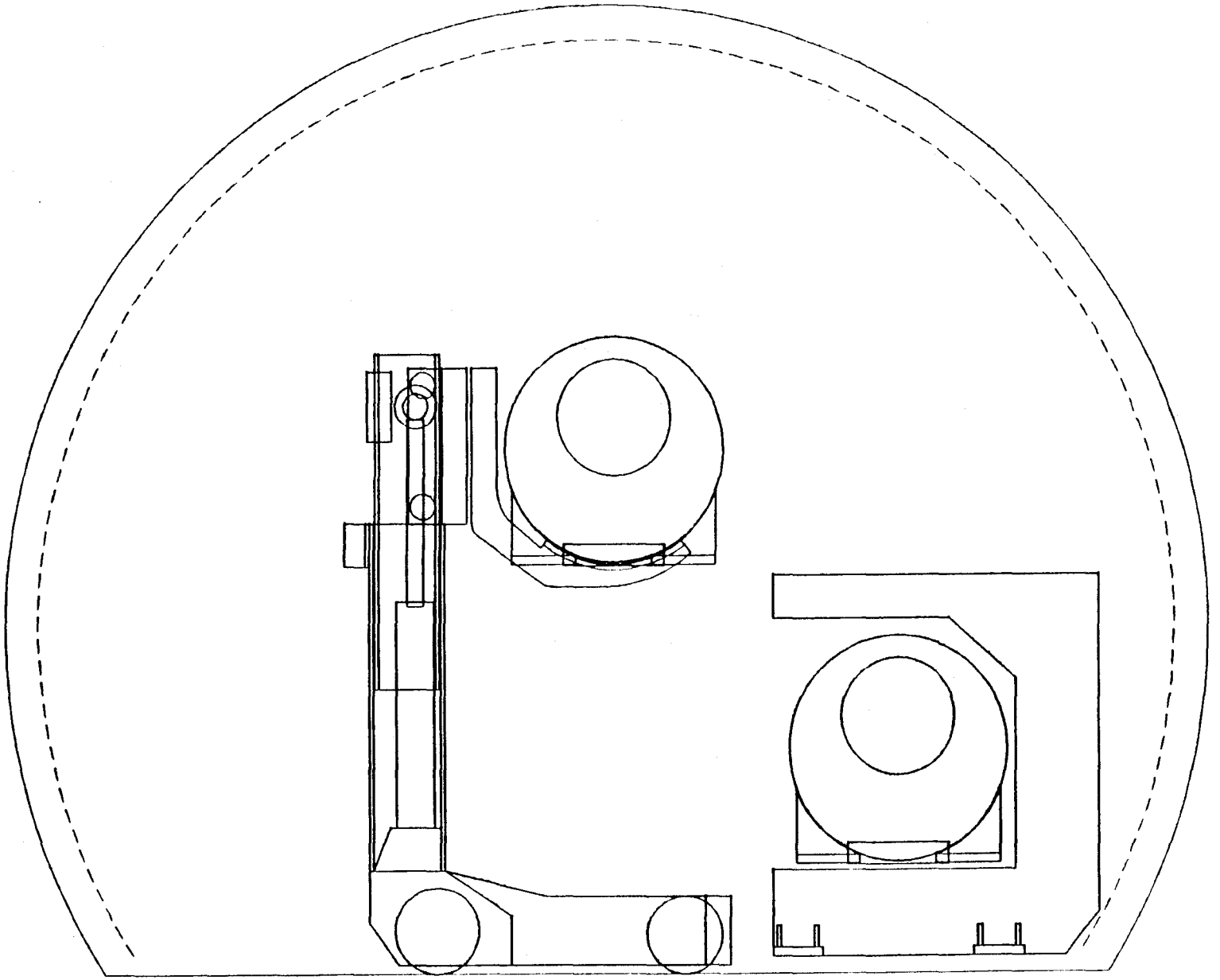

EXHIBIT 8.22
TUNNEL CROSS SECTION
MAGNET AT MAXIMUM LIFT

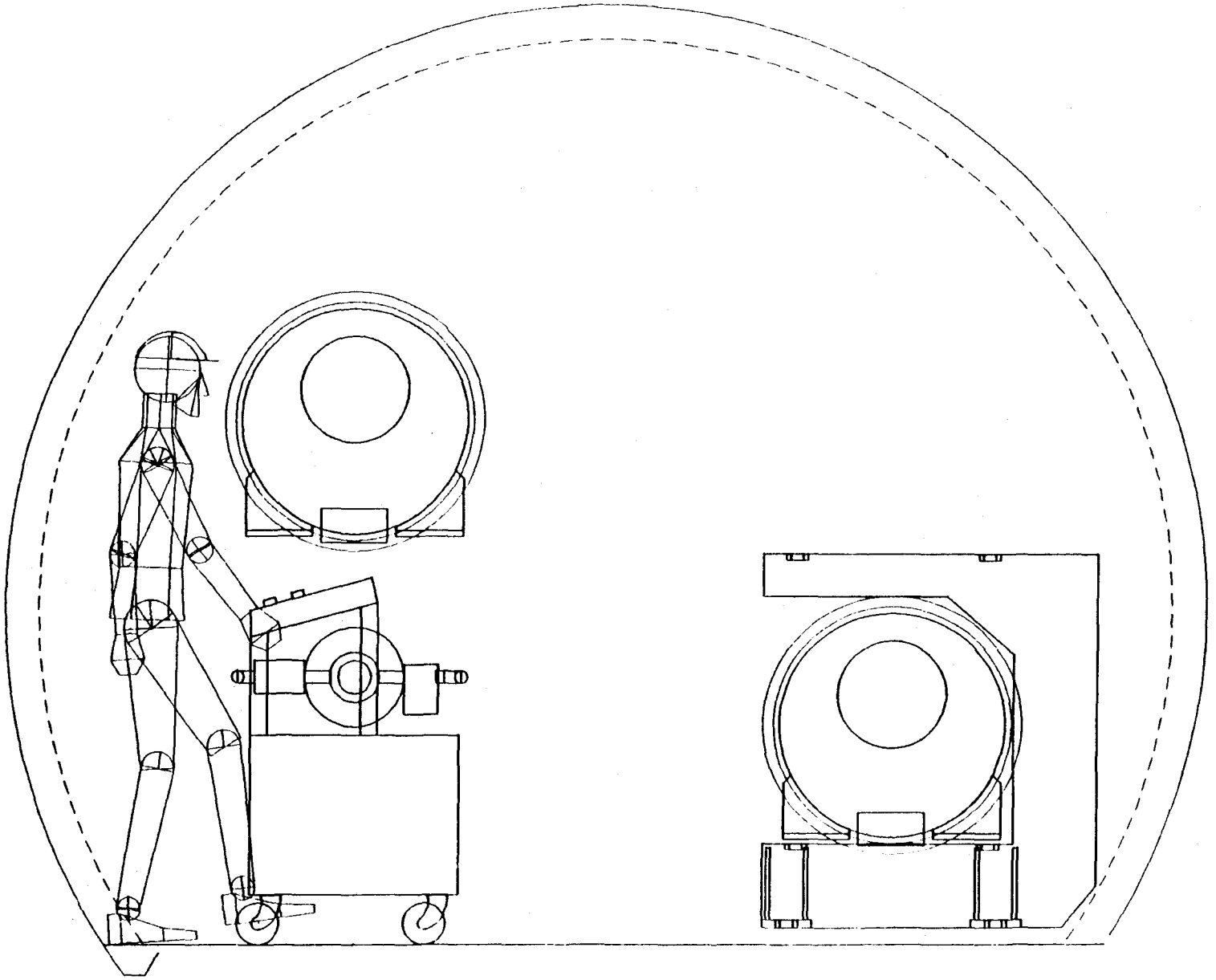

EXHIBIT 8.23
TUNNEL CROSS SECTION
MAGNET RETRACTED TO ALLOW
TRANSPORTER EXIT

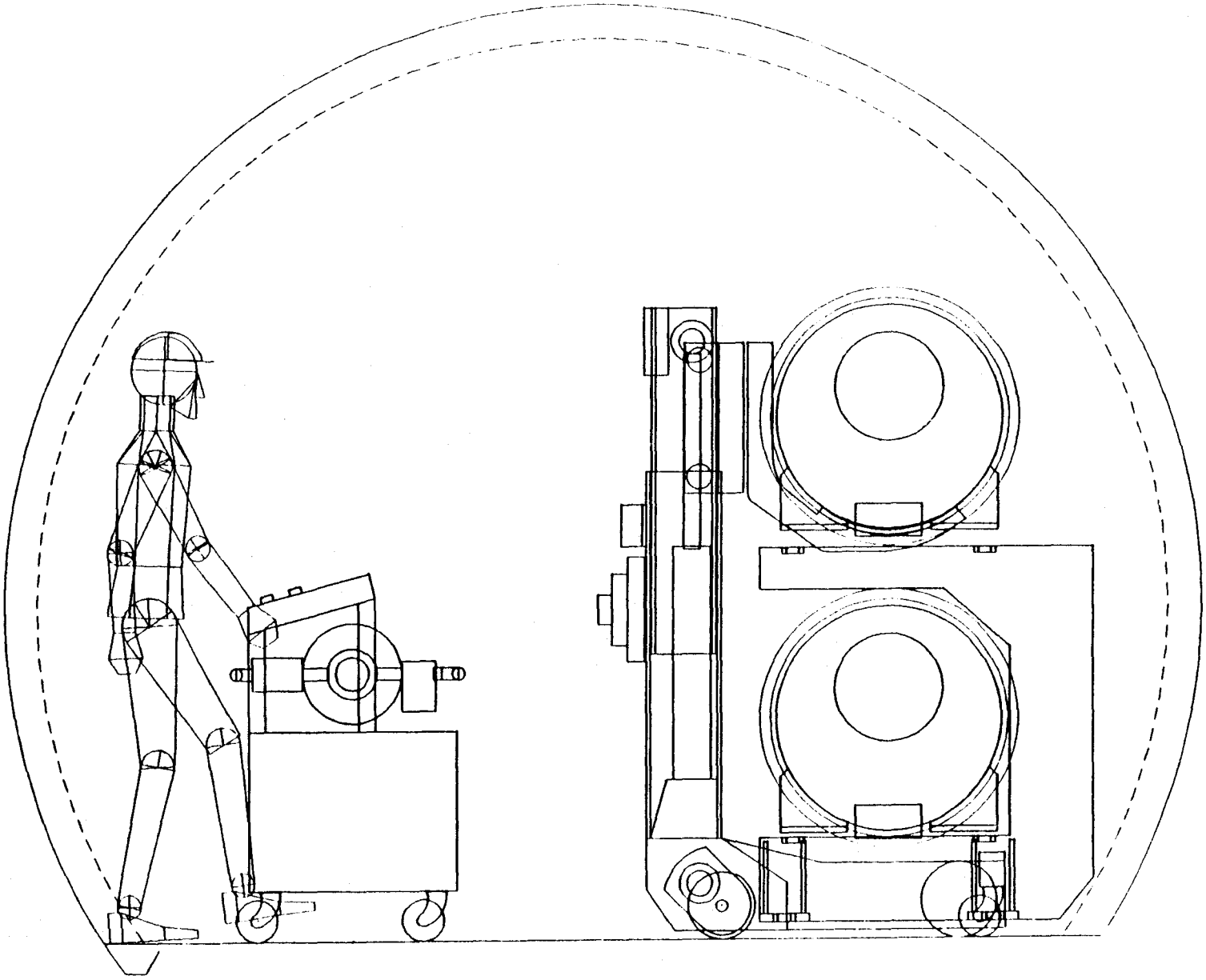

EXHIBIT 8.24
TUNNEL CROSS SECTION
MAGNET BEING LOWERED INTO POSITION

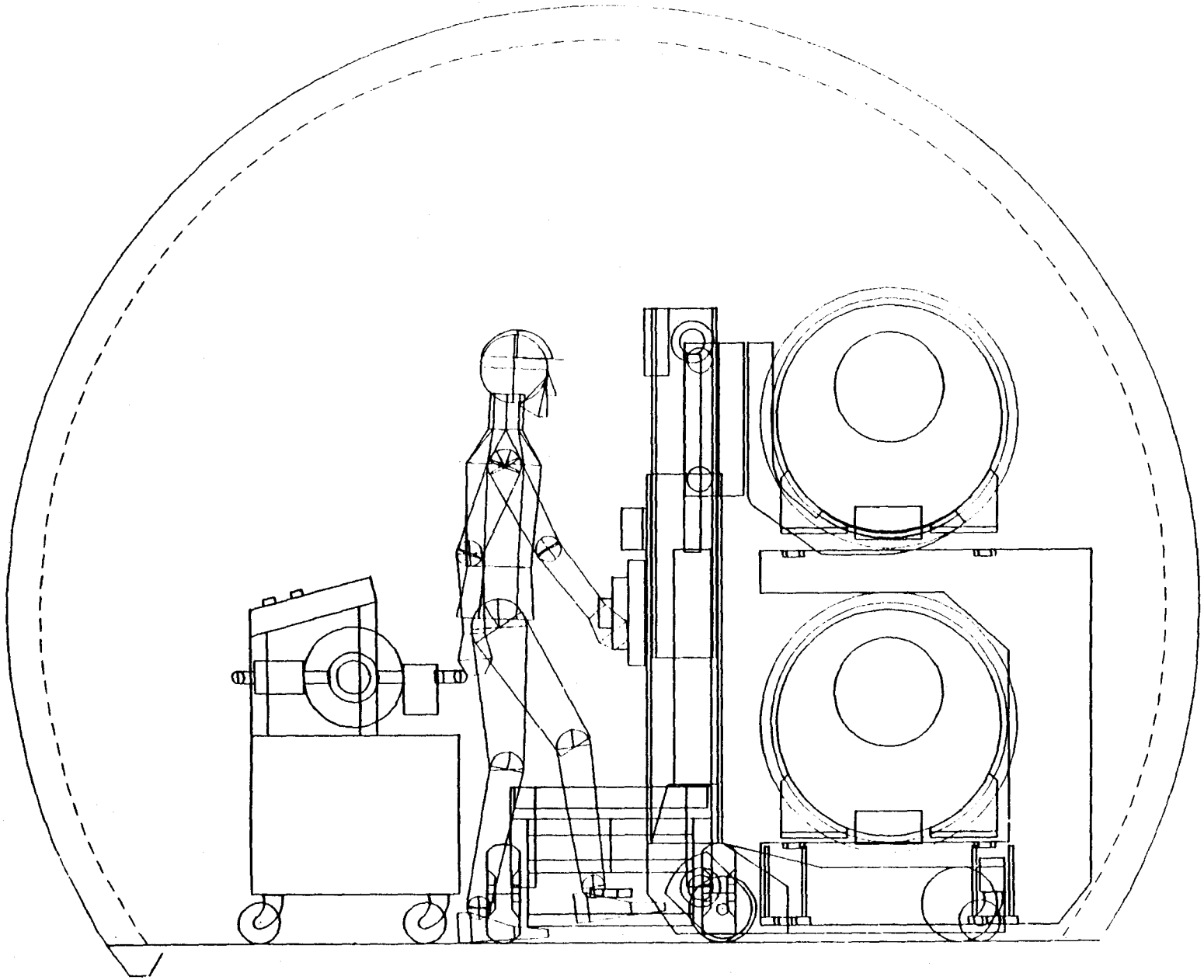

EXHIBIT 8.25
TUNNEL CROSS SECTION
MAGNET BEING ALIGNED

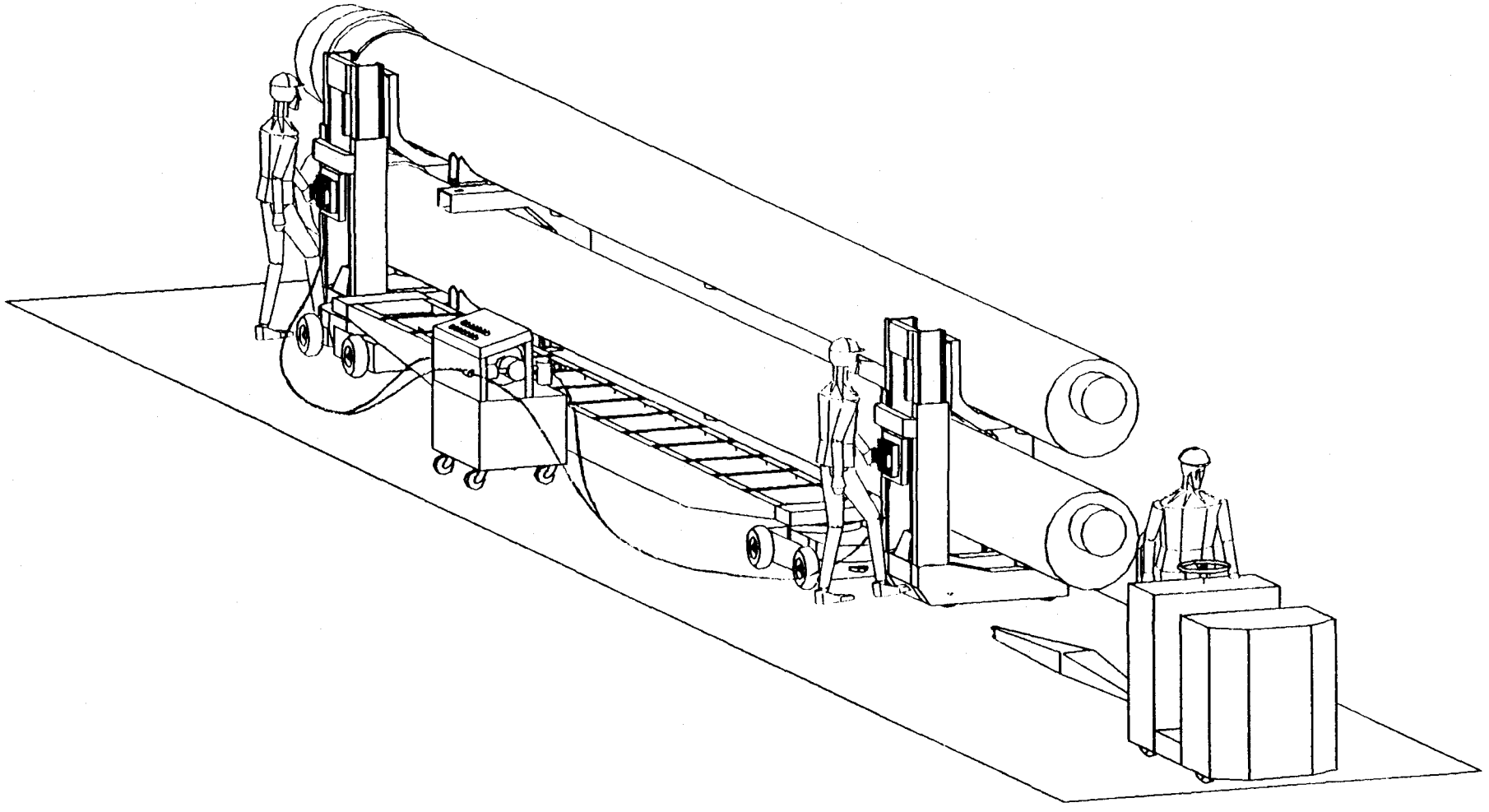

EXHIBIT 8.26
MAGNET BEING ALIGNED

INTENTIONALLY BLANK

9. MAGNET SUPPORT STAND

The dipole installation device should be designed around the constraints of the magnet support stand dimensions. For this reason an attempt was made to do a preliminary support design. See Exhibits 9.1, 9.2, and 9.3.

The support was analyzed for stresses, static deflection, and vibrations. These rough, preliminary analyses were based on assumed dipole dimensions and weights (actual dimensions were not available).

The design is based on available commercial square or rectangular tubing welded pieces. Stresses are small and are shown in Exhibit 9.4. Static deflections were calculated at the beam line and are also shown in Exhibit 9.4.

Natural frequencies were calculated for the dipole support and magnet system. For this purpose, the weights and dimensions of the structural components of the dipole were assumed and are shown in Exhibit 9.6. The structural system has several modes of vibration, each with a different frequency. These modes and frequencies are tabulated in Exhibit 9.4.

The structure was then submitted to applied vibrations obtained from field measurements made by Earth Technologies in their report No. SSC-SR-1043, dated December 1989. The two worst cases of vibration were used from the report and correspond to blasts from a nearby quarry and from a railroad track in the vicinity. These spectra are shown on Exhibits 9.7, 9.8, and 9.9.

In order to consider the worst case, vertical railroad vibrations were applied at the peak amplitude and made resonant with the natural frequency of the structure system. This may occur in practice as trains may travel at different speeds, producing different vibration frequency spectra. For horizontal vibrations, the peak amplitude was selected from the waves generated by a blast in a nearby quarry.

A 1% dampening effect was considered. This is very conservative and field measurements will be required to obtain the actual value of this factor. Insulation and the internal construction of the magnet may supply a considerable dampening effect.

With the above assumptions, it was found that the vertical and transverse vibrations are amplified approximately 20 times, from .008 thousandths of an inch to .160 thousandths of an inch for the vertical vibrations and approximately 50 times for the transverse vibrations, from .005 thousandths of an inch to .240 thousandths.

In case this is objectionable, a stiffening member was added to close the loop of the U-shaped support. Please note that this member is intended for stiffening the spring constant of the support and not to carry the load of the top magnet. This member should be added after the top magnet has been installed and the U-shaped support has taken its final static deflection. This will allow extraction of the bottom magnet without producing a temporary misalignment of the top magnet.

The extra stiffening produced a significant reduction in the amplitude of vibrations, approximately 1.5 to 2.5 times the applied vibrations as compared with 20 to 50. Please see Exhibit 9.5.

As we understand it, vibrations are more significant on quadrupoles than on dipole magnets. The above calculations apply only to dipoles, as we have no information on quadrupoles at this time. Also, these calculations were made conservatively. Field tests are necessary to verify or correct assumptions, although the calculations give us an order of magnitude for what the vibration problems may be in the field.

The supports are provided with slotted holes for 1.5-inch transverse adjustment of the supports and also with 1.5-inch slotted holes for further transverse adjustment of the magnets on the supports. For axial adjustment it is assumed that slotted holes would be provided in the magnet external supports.

The supports have been designed assuming 3/4-inch shimming in the bottom magnet and 1/4-inch shimming in the top magnet. If other means of vertical adjustment is adopted the supports may have to be redesigned to adapt to such adjustment mechanism. The 3/4-inch shimming for the bottom magnet is intended to provide extra clearance during installation.

It is suggested that the final detail design be left to the vendors that will quote on the supply of the supports. A specification with preliminary design drawings and strict design criteria for features, tolerances, deflection, and quality control should be enough for definition of the supports. Vendors have their own shop practices which will be incorporated on shop drawings, thus decreasing the cost of fabrication.

NOTE: The above analysis was made for a 26-inch diameter magnet. At present a 27-inch magnet is being considered, but since the assumed weight will not be different, the above analysis will not vary significantly. The support design shown in Exhibits 9.1 through 9.3 is for a 27-inch magnet.

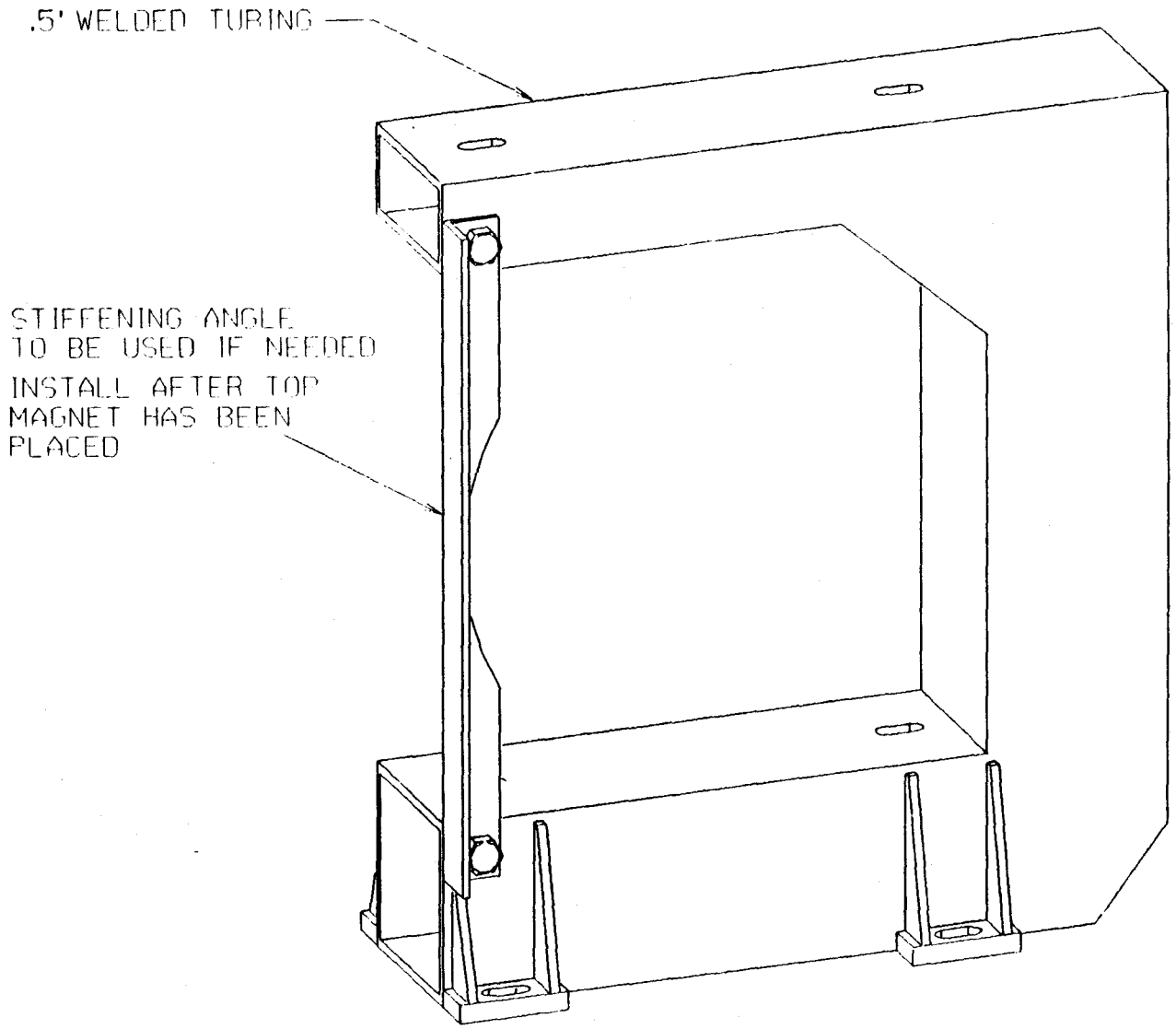

EXHIBIT 9.1
MAGNET SUPPORT ISOMETRIC

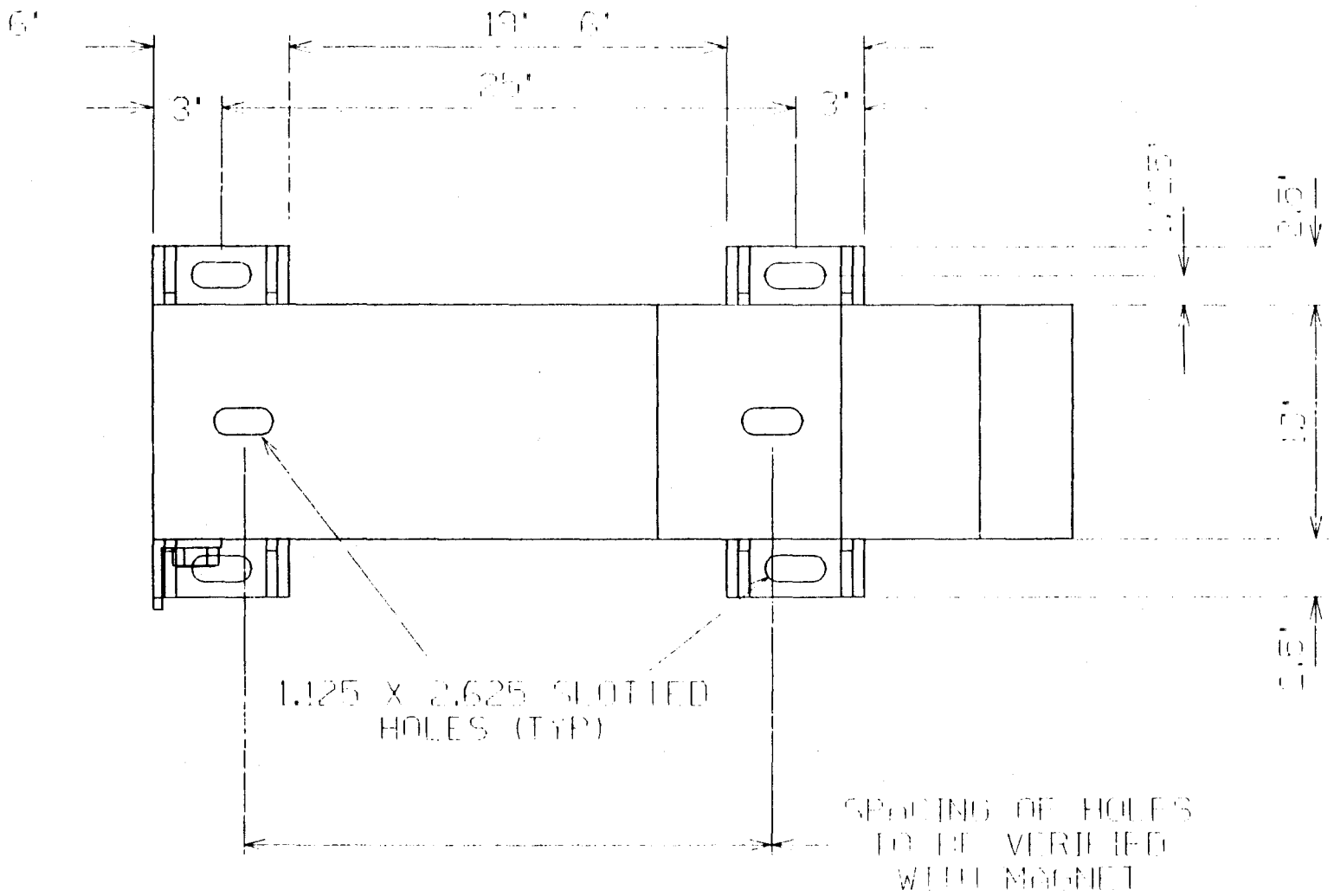

EXHIBIT 9.2
MAGNET SUPPORT PLAN

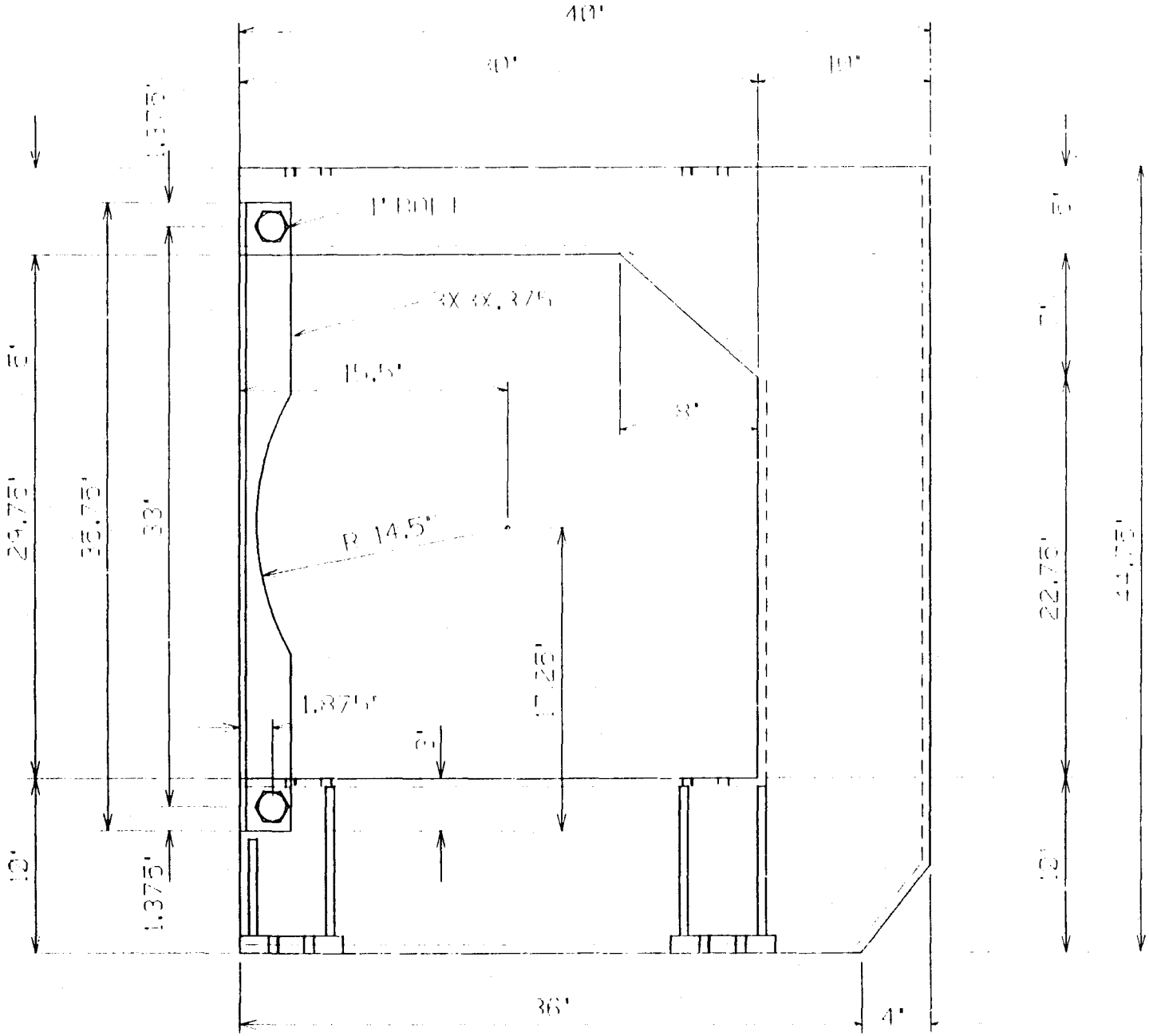

EXHIBIT 9.3
MAGNET SUPPORT ELEVATION

ANALYSIS OF 26" DIA. DIPOLE SSC MAGNET SUPPORT ASSEMBLY

Following are results of computer analyses performed on the Dipole Vacuum Vessel and its supports. Each unit of the vacuum vessel consists of a 607" long 26" DIA. x 3/8" THK. steel pipe supported by 1/2" THK. box shaped members spaced at 336" apart.

- Static (Gravity) Loads:

Displacement	Vertical	Horizontal	Bending Stresses
Upper Dipole			
At Ends	0.064"	0.078"	0.000 ksi
At Mid Span	0.062"	0.078"	1.292 ksi
At Supports	0.038"	0.078"	2.424 ksi
Lower Dipole			
At Ends	0.026"	0.000"	
At Mid Span	0.025"	0.000"	
At Supports	0.000"	0.000"	

- Results of Modal Analysis to determine modal frequencies of the structure:

MODE	FREQUENCY (cps)	PERIOD (sec)
1	6.416	0.156
2	7.279	0.137
3	8.408	0.119
4	9.164	0.109
5	11.336	0.088
6	14.710	0.068
7	20.481	0.049
8	23.267	0.043
9	36.386	0.027
10	46.788	0.021

- Response Spectrum Analysis of vibrations at site VF-1.7:

Results indicate no dynamic response when structure is subjected to the Displacement Spectra obtained from Fig. K-3 (Horizontal displacements generated by blast) of the vibrations report prepared by The Earth Technology Corp., Report No. SSC-SR-1043, Dec. 1989. Dynamic response due to the displacement spectra obtained from Fig. E-6 (Vertical displacements generated by train vibration) of the above report indicated 0.1 micron vertical and transverse displacements at the ends and at the midspan of the pipe.

ANALYSIS OF 26" DIA. DIPOLE SSC MAGNET SUPPORT ASSEMBLY

(NOTE: 1% DAMPING ASSUMED FOR ALL MODES.)

DISPLACEMENTS IN MILS

	LOADING DESCRIPTION	ENDS OF PIPE	DISPLACEMENTS AT SUPPORTS	MIDSPAN
		CASE [A]:	OPEN C-SUPPORT	
		CASE [B]:	C-SUPPORT WITH ADDED VERTICAL MEMBER	
1	VERTICAL HARMONIC LOAD	0.182	0.142	0.146
	AMPLITUDE = 0.000008"	0.022	0.008	0.015
	@ RESONANT FREQUENCY			
2	TRANSVERSE HARMONIC LOAD	0.272	0.212	0.218
	AMPLITUDE = 0.000005"	0.013	0.007	0.009
	@ RESONANT FREQUENCY			
3	LONGITUDINAL HARMONIC LOAD	0.007	0.007	0.007
	AMPLITUDE = 0.000005"	0.008	0.008	0.008
	@ RESONANT FREQUENCY			

MODAL FREQUENCIES

MODE	FREQUENCY (cps)	PERIOD (sec)
	CASE [A]	
	CASE [B]	
1	6.413	0.1559
	7.231	0.1383
2	7.319	0.1366
	8.290	0.1206
3	8.296	0.1205
	10.251	0.0975
4	9.620	0.1039
	11.434	0.0875
5	11.156	0.0896
	13.105	0.0763

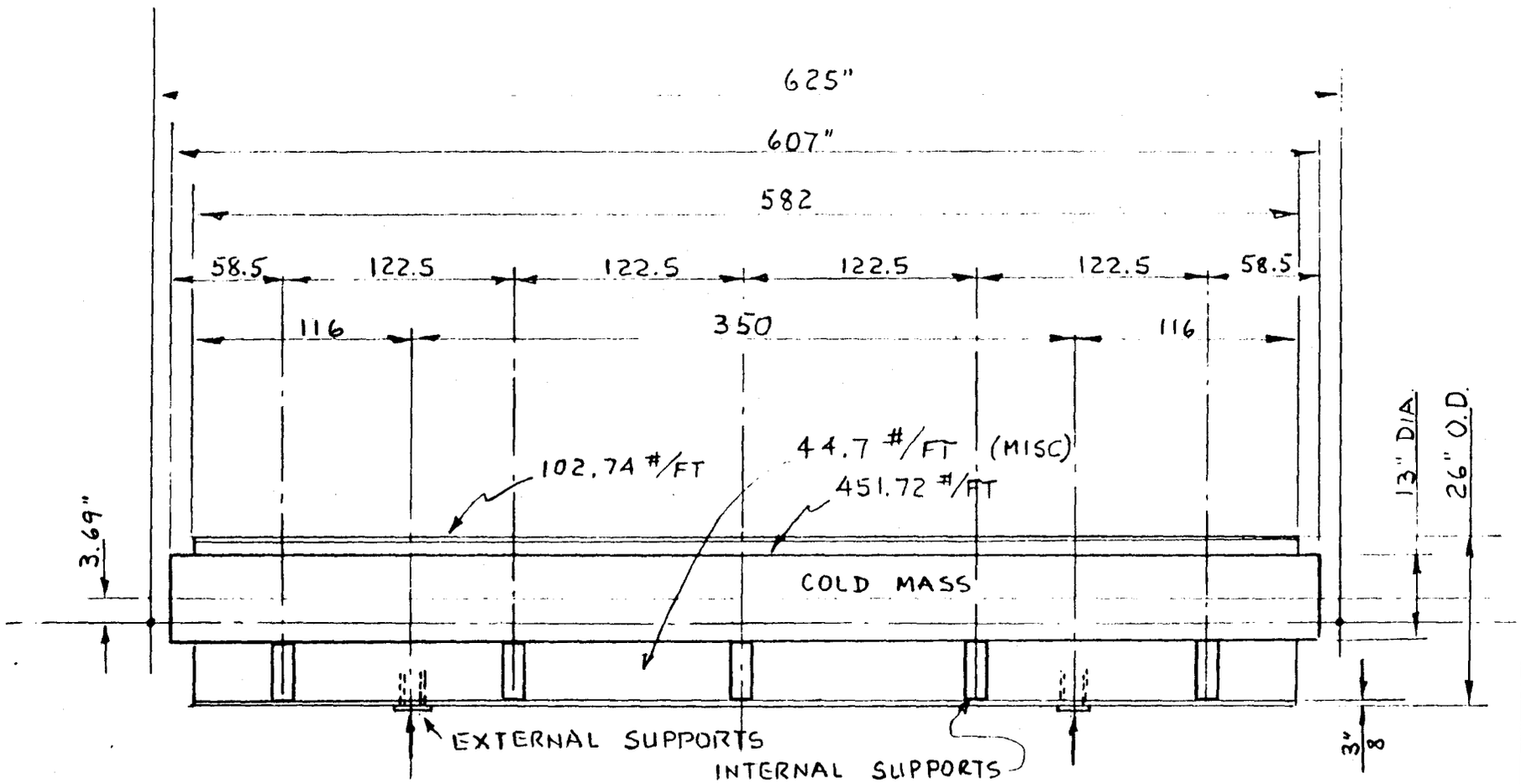

NOTE: ALL DIMENSIONS ARE APPROXIMATE AND UNCONFIRMED. USE ONLY FOR PRELIMINARY ANALYSIS

EXHIBIT 9.6
SSC 26-IN DIAMETER DIPOLE
MAGNET DIMENSIONAL DATA FC
DYNAMIC ANALYSIS

SSC - 26" DIA DIPOLE MAGNET
DIMENSIONAL DATA FOR
DYNAMIC ANALYSIS

DESIGNED BY J. BROWN DATE 3-15-
CHECKED BY DATE

SHEET 1 OF 1

JOB NO. 85122-000

Project No. 87-888-0011
Report No. SSC-SR-1043
December 1989

Final

Field Measurements and Analyses of Underground Vibrations at the SSC Site

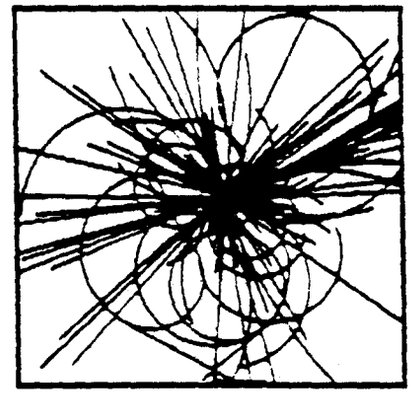

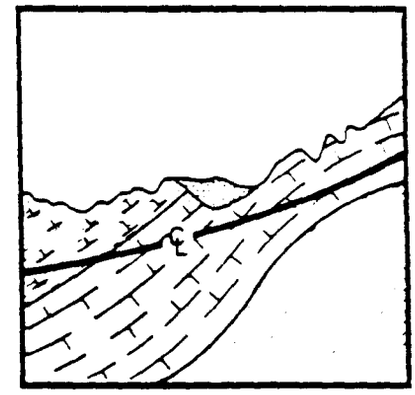

Prepared by: *The Earth Technology Corporation*
Long Beach, California

Prepared for: RTK a joint venture
Oakland, California

EXHIBIT 9.7

D

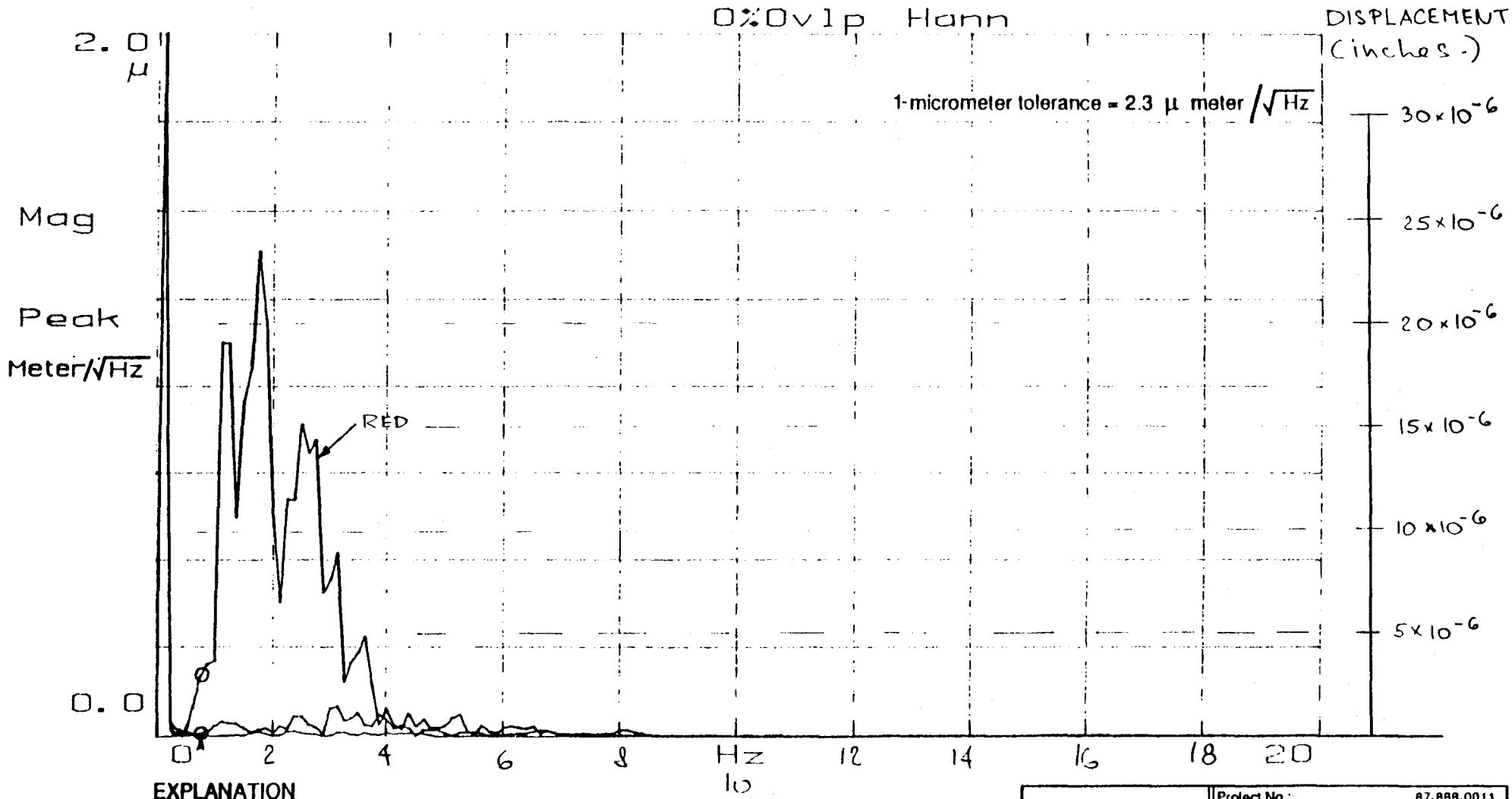

EXPLANATION

Geophone Depths in feet (meters)
1 Hz Geophone 4106 @ 63.0 (19.2)
Blue = S and max. amplitude waves generated by blast
Red = P wave generated by blast
Black = Ambient vibration
⊙ Lower Frequency Limit of Calibration

DISPL. IN INCHES =
$\mu \times 10^{-6} \times \sqrt{0.187} \times 39.4 = \mu \times 10^{-6} \times 17.0$

The Earth Technology Corporation	Project No.: 87-888-0011
	RTK Joint Venture

Displacement Linear Spectrum
Site VF-1.7

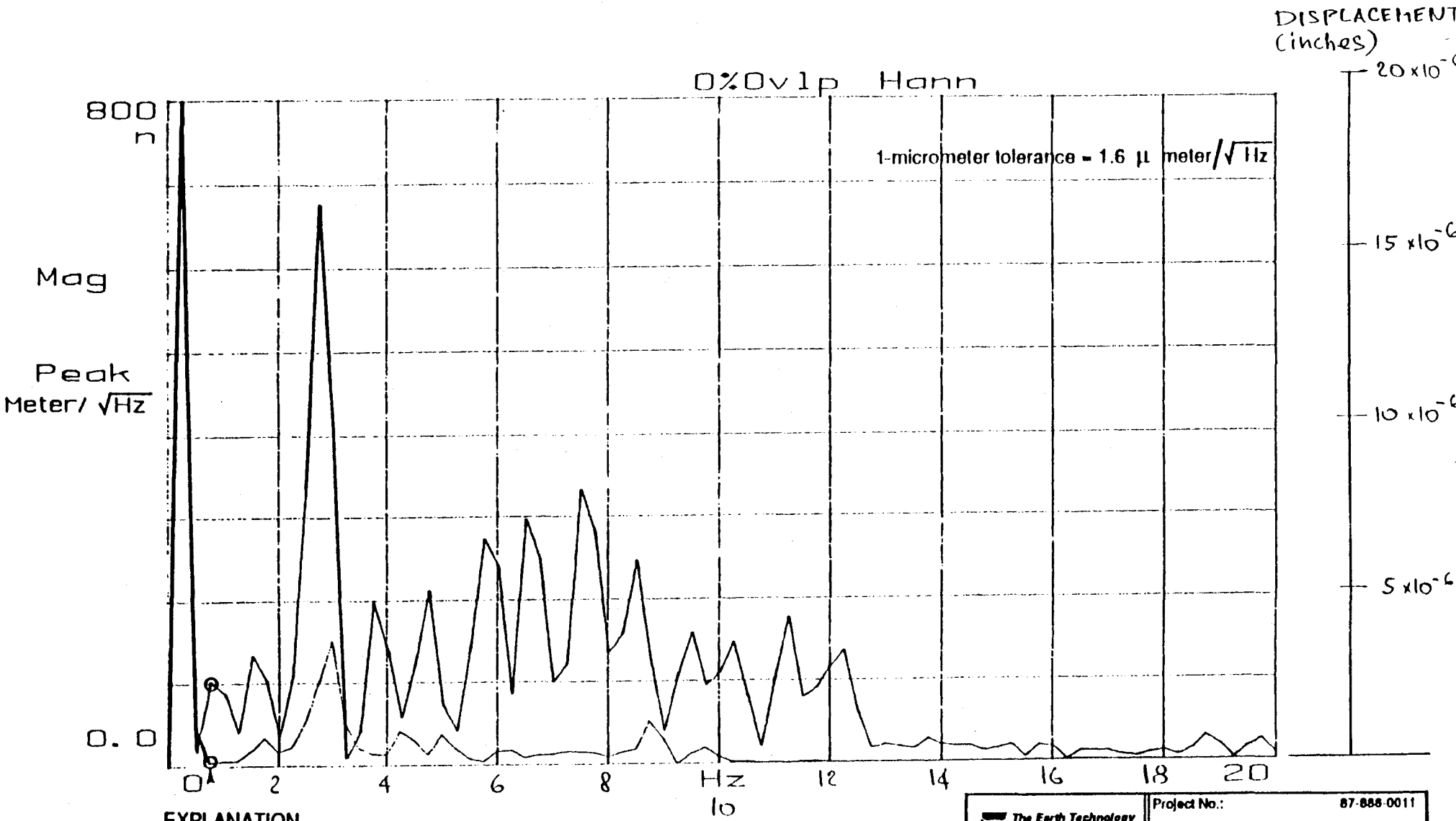

EXPLANATION

1 Hz Geophone Data

Red = Max. Train Vibrations Measured @ 64.0 feet (19.5 meters)
Black = Ambient Vibrations Measured @ 64.0 feet (19.5 meters)

Lower Frequency Limit of Calibration
Bandwidth = 0.375 Hz

DISPLACEMENT IN INCHES:
$n \times 10^{-9} \times \sqrt{0.375} \times 39.4$

The Earth Technology Corporation

Project No.: 87-888-0011

RTK Joint Venture

Displacement Linear Spectrum
Data Set 2
Site VF-1.7

12 89

EXHIBIT 9

INTENTIONALLY BLANK

10. PERSONNEL AND TOOL CARRIERS

Electrically operated personnel and tool carriers are commercially available in a variety of sizes. One and two-passenger carriers are available in the required 30-inch width, however, three and more passenger vehicles, are not readily available in that width. Vehicles of this capacity and width can be specially designed but would necessarily cost more. More research with other vendors is required and more data will be found when seeking prequalification of vendors.

A typical range for these vehicles is 20 to 30 miles. Since the maximum distance that would normally be traveled by these units is 2.7 miles (half the distance between E shafts), they would be able to make several round trips before recharging or changing batteries.

Personnel vehicles typically run at a maximum speed of nine miles per hour, so the longest round trip to a work area would be 36 minutes, which seems acceptable. Faster vehicles would be dangerous and slower vehicles would waste too much labor time.

The one and two-passenger vehicles come equipped with four 244-ampere-hour batteries which give 24V of electric power. These vehicles would cost around $4000 each. A typical one-passenger vehicle is shown on Exhibit 10.1; it can be used to transport tools or another person in the rear section.

A typical working crew could consist of three people towing a small trailer with tools and supplies. These vehicles come equipped with six 244-ampere-hour batteries which give 36V of electric power. Exhibits 10.2 and 10.3 show the vehicle and trailer. The cost of these vehicles ranges from $9000 to $10,000, with trailers costing another $700. Exhibits 10.4 through 10.6 show other typical vehicles offered by industry.

It is assumed that electric outlets will be located frequently around the tunnel so that vehicles can be charging while parked near working areas. This would require furnishing vehicles with sealed batteries and permits or waivers from safety agencies. See Section 7.

All of these vehicles may come equipped with automated steering systems so it could be possible, if warranted, to dispatch vehicles with tools and supplies from the E shafts to the workplace without drivers. In this case it is recommended that the speed be reduced to 5 miles per hour or less to provide time for automatic safety devices to actuate in case of problems or obstacles. Safety bumpers and modifications to the braking system would also be required. Costs for these modifications have not been included in the vehicle costs above.

Vehicles would have to disconnect trailers when reversing direction and then trailers would have to be turned by hand and reconnected to the towing vehicle.

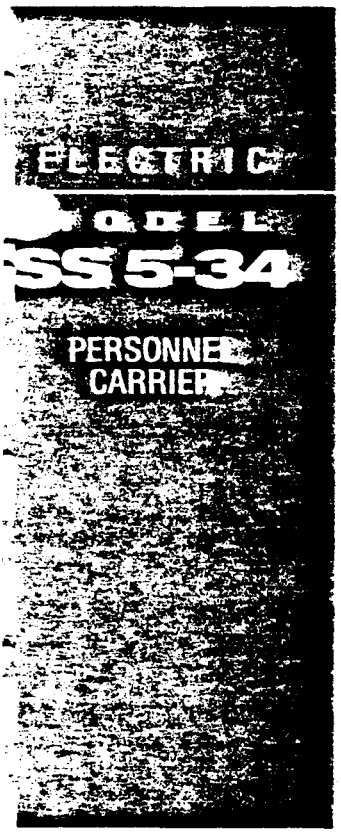

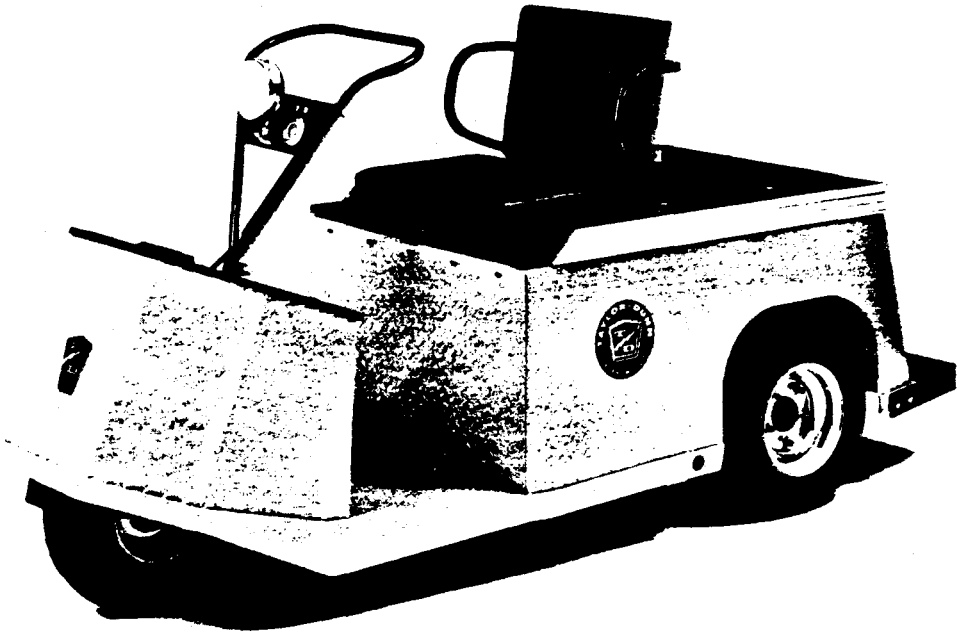

Vehicle features optional fold down seat backrest and rear step. Also featured are optional headlight and taillight.

Here is a compact and economical personnel carrier for everyone from executive and supervisory personnel to security and maintenance. The Model SS 5-34 performs dependably in plants, warehouses, hotels, motels, and resorts. It speeds the operations of shopping centers, malls, apartment complexes, and campuses and is used to provide vital service in hospitals.

Perfect for narrow aisles and tight spots because of its 144" clearance circle, it features safety loop tiller steering to protect the driver's hands. Its pneumatic tires easily handle all conditions from smooth floor to outdoor driving. A precision laser crafted frame and all-steel unitized body stand up to constant heavy-duty use. The SS 5-34 is designed for maximum protection of its componentry.

With a 500 lb. payload capacity, the SS 5-34 is ideal for carrying tools, delivery of mail, hauling small cargo, or distributing parts, and with its optional fold down seat, it converts instantly to a two passenger vehicle. Or, it may be used as a towing vehicle where it can tow over 3,000 lbs.

MODEL SS 5-34 (3 WHEEL) ELECTRIC PERSONNEL CARRIER SPECIFICATIONS
FOR A LOAD CAPACITY UP TO 500 LBS. (226.7 KG.).

Unit Weight: (with charger and batteries) 701 lbs. (309 kg.)
Load Capacity: 500 lbs. (226.7 kg.) (200 lbs. per passenger plus load).
Batteries: Four 220 a.h. (90 minute rating) electric vehicle batteries.
Charger: 25 amp. 24 volt Lestronic II line compensated built-in charger with controls on dash.
Drive Axle: Two belt drive to automotive differential.
Motor: NEMA rated 24 volt, 4.5 h.p. (@ 935 r.p.m.) intermittent duty to 1.5 h.p. (@ 2,600 r.p.m.) normal duty.
Speed: 10 m.p.h. (16 km.p.h.)
Brakes: Mechanical brake through differential to both rear wheels. Foot operated brake pedal parking brake on foot pedal.
Tires & Wheels: Three 4.80 x 8 Load Range B highway tread pneumatic tires. Single front wheel on tapered roller bearings. Tires and wheels are demountable type.
Color: Safety Orange.
Controls & Wiring: Heavy duty master control switch with key lock. Power wire is No. 6 insulated cable. Four speeds forward and reverse utilizing solenoids. Heavy duty speed control 1/4" (6.35 mm) x 1/2" (12.70 mm) buss bar contacts. Foot operated accelerator pedal.
Steering: Loop tiller.
Frame: All steel unitized body. Heavy duty 16 gauge diamond plate steel facing on all exterior surfaces.
Bumper: Heavy duty steel front and rear.
Rub Rails: Heavy duty steel on both sides.
Springs: Heavy duty coil springs front and rear.
Shock Absorber: Heavy duty on rear.
Horn and Indicators: 12 volt electric horn, battery discharge indicator.
Seats: Seat of foam, covered with heavy duty black naugahyde upholstery.

OPTIONAL FEATURES AT ADDITIONAL COST:
Traffic yellow or special color paint, PWR-TRON speed control, fully automatic Lestronic II portable chargers, geared steering, lift-out battery box, 230 or 244 a.h. batteries, convertible seating for additional passenger, hourmeter, headlight, taillight, mirror, light on pole, hitch, wheel covers, foam-filled or Steelguard tires, solid cushion tires, stoplight, undercoating, FLAT OUT tire treatment.

This product conforms to requirements for Type E as stated in O.S.H.A. Standard Section 1910.178 (Powered Industrial Trucks) and ANSI B56.8-1988.

Specifications, standard equipment, accessories and modifications subject to change without notice.

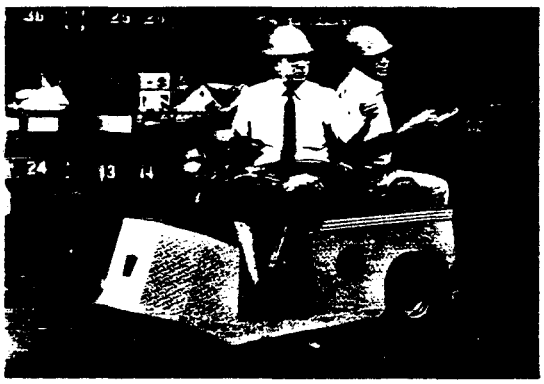

An optional fold down seat on the Model SS 5-34 allows instant conversion to a two passenger vehicle.

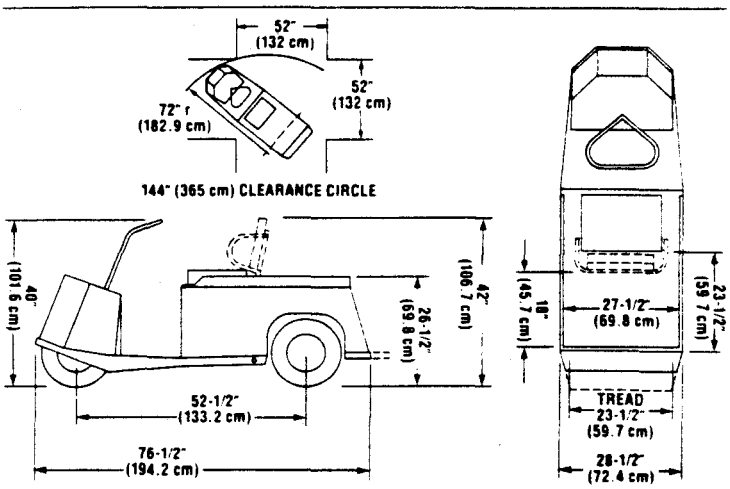

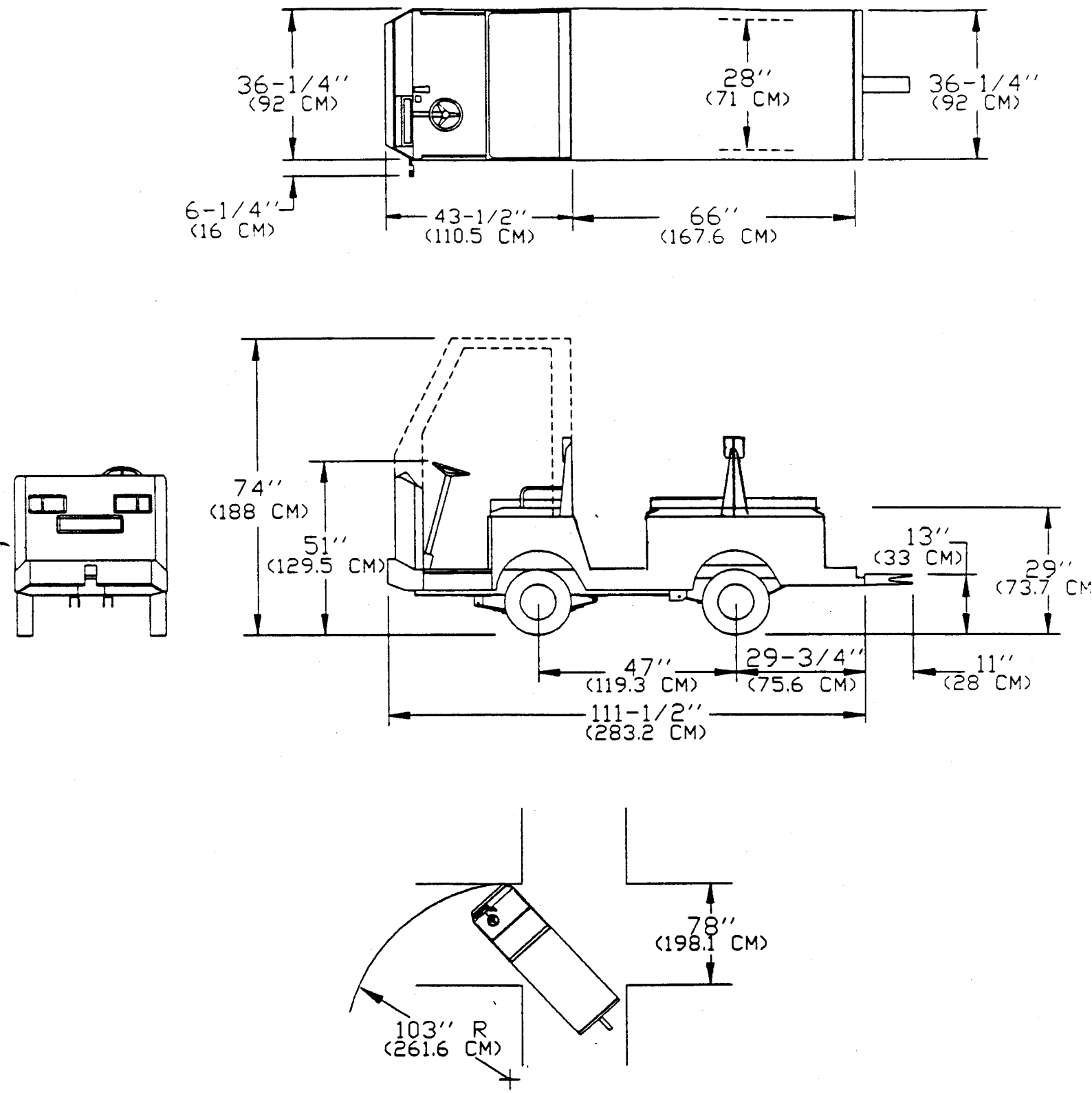

C 4-15

[redacted]

EXHIBIT 10.2
BUHERER INC. THREE-PASSENGER VEHICLE

MODEL T-B4
LARGE TRAILER
T-A-T
TRACKING TRAILER

Model T-A-T trailer may be attached to any Taylor-Dunn vehicle for towing.

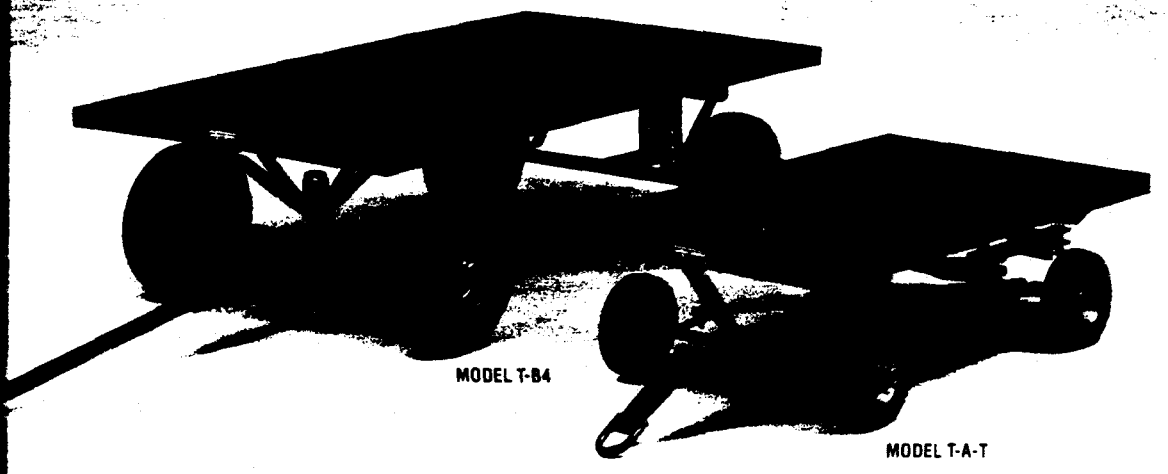

MODEL T-B4

MODEL T-A-T

The Model T-B4 trailer is for carrying heavier loads, with its payload capacity up to 1500 lbs. Constructed of heavy duty angular steel, the T-B4 comes standard with a rear hitch plate for multiple trailer towing, 4.80 x 8 pneumatic tires, and wood deckboard. Optional features include solid steel or wood stake sides, many tire options so you can match tires and wheels with the towing vehicle, and a variety of hitches for towing purposes.

The Model T-A-T is a true tracking trailer with a payload capacity of 750 lbs. Constructed of welded heavy duty angular steel, the T-A-T is available with such standard features as a hitchplate, plus a pin and clevis hitch on the rear of the vehicle for multiple trailer towing purposes. Also standard are semi-pneumatic tires (for smooth surfaces) and a wood deckboard. Options for the T-A-T include solid steel sides and stake sides for containing large loads. A train of T-A-T trailers may be hooked onto any Taylor-Dunn vehicle for towing.

MODEL T-B4 LARGE TRAILER (TO-911-00)

Type: Four wheel trailer with turning front axle and fixed rear axle
Weight: 368 lbs. (166.9 kg.)
Capacity: 1500 lbs. (680.4 kg.)
Maximum Length: 112 inches (284.5 cm.) including tongue
Maximum Width: 42 inches (106.7 cm.)
Bed Size: 42 x 76 inches (106.7 x 193.1 cm.)
Wheel Base: 49 inches (124.5 cm.)
Bed Height: 22 inches (55.9 cm.)
Wheel Size: 5.70 x 8, Load Range B highway tread.
Color: Safety Orange.
This vehicle is not designed for highway use.

OPTIONAL FEATURES AT ADDITIONAL COST:
Special color paint, 14" high stake sides, pintle hitch, automatic coupling hitch, 18 x 8.50 x 8 Terra tires 4-ply rating, FLAT OUT tire treatment.
Specifications, standard equipment, accessories and modifications subject to change without notice.

MODEL T-A-T (4 WHEEL) TRACKING TRAILER (TO-910-00) SPECIFICATIONS FOR A LOAD CAPACITY UP TO 750 LBS. (340 KG.).

Type: Four wheel trailer of tracking design utilizing fifth wheel steering both front and rear with front and rear axles connected by tie rods
Weight: 165 lbs. (74.85 kg.)
Capacity: 750 lbs. (340.2 kg.)
Maximum Length: 78 inches (198.1 cm.) including tongue
Maximum Width: 31½ inches (80 cm.)
Bed Size: 31½ x 54 inches (80 x 137.2 cm.)
Wheel Base: 36 inches (91.4 cm.)
Bed Height: 16 inches (40.6 cm.)
Wheel Size: 10 x 2.75 heavy service semi-pneumatic tires
Hitch: Clevis hitch is standard.
Color: Safety Orange.
This vehicle is not designed for highway use.

OPTIONAL FEATURES AT ADDITIONAL COST:
Special color paint, 14" high stake sides, pintle hitch.
Specifications, standard equipment, accessories and modifications subject to change without notice.

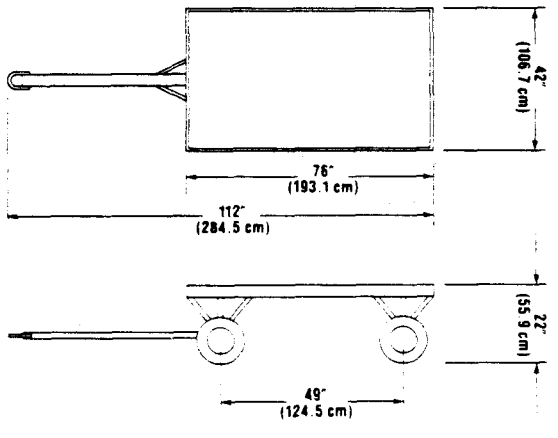

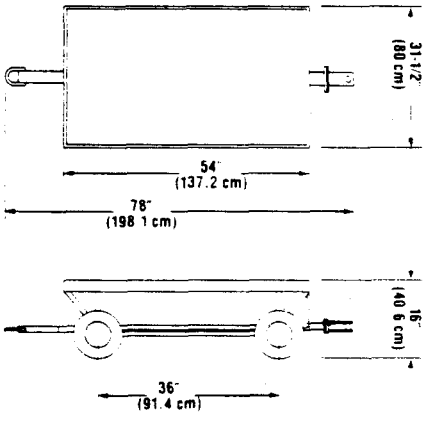

EXHIBIT 10

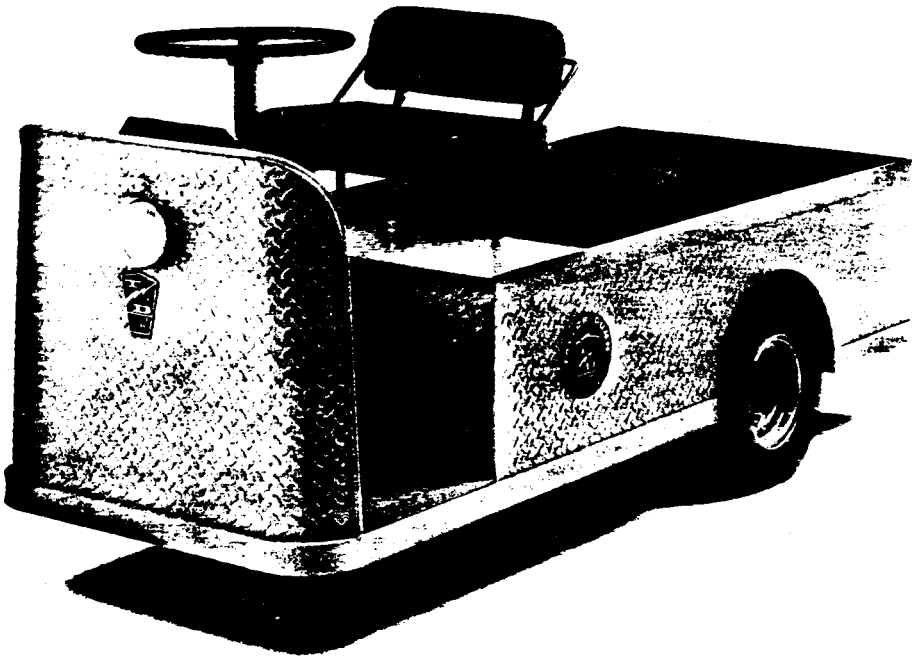

MODIFY TO C 4-15 CONFIGURATION

ELECTRIC

MODEL C 4-33 C 4-32

BURDEN CARRIERS/ TOW TRACTORS

When you must transport very heavy loads and negotiate narrow aisles at the same time, the Model C 4-33 or Model C 4-32 burden carriers/tow tractors are an ideal solution. At only 30" wide and with a small 140" clearance circle, these vehicles can go places other power equipment just cannot reach. They have the shortest turning radius in sit-down combination burden carriers/tow tractors.

With payload capacities of 1200 and 1400 lbs., the C 4-33 and C 4-32 have towing capabilities of up to 17,000 lbs. With a "Power Traction" direct-drive automotive axle and a variety of speeds and motor drives, the Model C easily handles most indoor moving jobs. For smooth floor conditions in industry, hospitals, schools, warehouses, or anywhere that quiet, fume-free heavy-duty electric power is needed, the C 4-33 and C 4-32 are ideal.

MODEL C 4-33 (3 WHEEL) AND C 4-32 (4 WHEEL) ELECTRIC COMPACT BURDEN CARRIER AND TOW TRACTOR SPECIFICATIONS
FOR A LOAD CAPACITY UP TO 1,200 LBS. (544 KG.).

MODEL C 4-33/24 VOLTS/3 WHEEL
Unit Weight: (with charger and batteries) 802 lbs. (363.8 kg.)
Load Capacity: 1,200 lbs. (544 kg.) (200 lbs. per passenger plus load)
Batteries: Four 220 a.h. (107 min. rating) electric vehicle batteries
Charger: 25 amp. 24 volt. Lestronic II built-in charger
Drive Axle: "Power Traction" drive axle operating in constant oil bath
Motor: NEMA-rated 24 volt. 4.5 h.p. (@ 935 r.p.m.) intermittent duty to 1.5 h.p. (@ 1600 r.p.m.) normal duty.
Speed: 6.5 m.p.h. (10 km.p.h.) standard

MODEL C 4-32/36 VOLTS/4 WHEEL
Unit Weight: (with charger and batteries) 918 lbs. (416 kg.)
Load Capacity: (200 lbs. per passenger plus load) 1,400 lbs. (635 kg.)

The narrow aisle Model C equipped with optional fiberglass cab and naugahyde doors, stake sides, and cab-mounted amber strobe light

Batteries: Six 220 a.h. (107 min. rating) electric vehicle batteries
Charger: 25 amp. 36 volt. Lestronic II built-in charger
Drive Axle: "Power Traction" drive axle operating in constant oil bath
Motor: NEMA-rated 36 volt. 6 h.p. (@ 1400 r.p.m.) intermittent duty to 2 h.p. (@ 2800 r.p.m.) normal duty motor
Speed: 9.0 m.p.h. (14 km.p.h.) standard

MODEL C 4-33/C 4-32
Brakes: Mechanical brake through differential to both rear wheels. Hand operated parking brake
Tires & Wheels: 4.80 x 8. Load Range B highway tread pneumatic tires
Color: Safety Orange
Controls & Wiring: Enclosed heavy duty forward and reverse switch with key switch. Power wire No. 6 insulated copper cable. "PWR-TRON" Solid state speed control
Steering: Steering wheel, chain and sprocket reduction to front fork
Frame: All-steel unitized body and frame. Heavy duty 16 gauge diamond plate facing on all exterior surfaces
Bumper: Heavy duty steel, welded to frame
Horn and Indicators: 12 volt electric horn, battery discharge indicator
Seat: Individual seat and backrest, seat and back of foam, covered with heavy duty black naugahyde upholstery. Adjustable.

OPTIONAL FEATURES AT ADDITIONAL COST:
230 or 244 a.h. batteries. 25 amp 24 or 36 volt Lestronic II portable charger. 40 amp 24 or 36 volt Lestronic II built-in or portable charger. 6.7 h.p. motor, special color paint, headlight and taillight, hourmeter, light on top of cab, stoplight, windshield wiper, stake sides, fiberglass cab, naugahyde doors, diamond plate deck, automatic coupling hitch, pintle hitch, mirror, 16½" x 4" x 11½" extra solid cushion tires, 6-ply Steelguard tires or foam-filled tires, undercoating, FLAT OUT tire treatment.

This product conforms to requirements for Type E as stated in O.S.H.A. Standard Section 1910.178 (Powered Industrial Trucks) and ANSI B56.8-1988.

Specifications, standard equipment, accessories and modifications subject to change without notice.

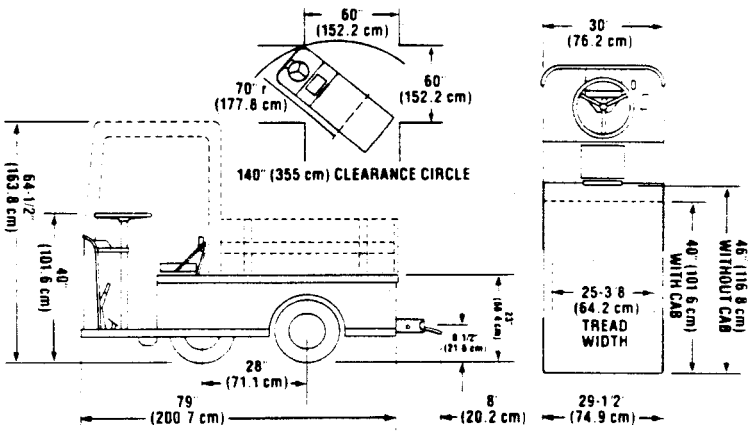

EXHIBIT 10.4

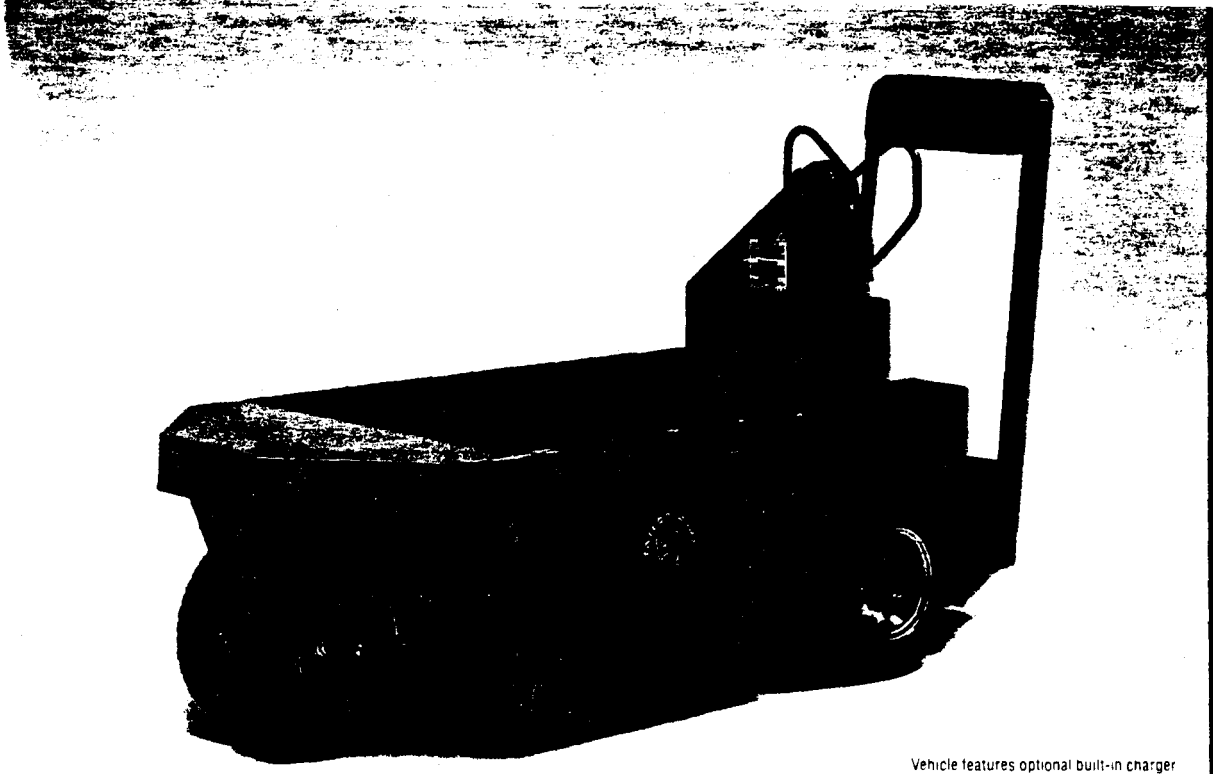

Vehicle features optional built-in charger

ELECTRIC MODEL SC 1-75

STOCKCHASER/ ORDER PICKER

The Model SC 1-75 has already proven itself in a wide variety of applications such as carrying castings, wire coils, machine parts, and fittings. Where maneuverability and power are both required, this is the ideal stockchaser/order picker for the job.

A dual front fork adds stability, while a steel deck ensures strength. It's available in a selection of frame and wheelbase lengths to properly handle bigger, heavier loads. It also offers a choice of ladder heights and payloads to meet your specific industrial applications.

This rugged, reliable vehicle provides easy maintenance as well as excellent narrow aisle maneuverability. With a "Power Traction" direct-drive automotive axle, the Model SC 1-75 is available with load capacities up to 3200 lbs.

MODEL SC 1-75 (3 WHEEL) ELECTRIC STOCKCHASER SPECIFICATIONS
FOR A LOAD CAPACITY UP TO 3,200 LBS. (1,451 KG.).

Unit Weight: (with charger and batteries) 893 lbs. (405 kg.).
Load Capacity: Up to 3,200 lbs. (1,451 kg.) (200 lbs. per passenger plus load).
Batteries: Four 220 a.h. (107 min. rating) electric vehicle batteries.
Charger: 25 amp, 24 volt Lestronic II built-in.
Drive Axle: "Power Traction" drive axle operating in constant oil bath.
Motor: NEMA-rated 24 volt, 4.5 h.p. (@ 935 r.p.m.) intermittent duty to 1.5 h.p. (@ 1600 r.p.m.) normal duty motor.
Speed: 8 m.p.h. (12.9 km.p.h.) standard.
Brakes: Drive shaft brake through differential to both rear wheels. Deadman brake on control treadle.
Tires & Wheels: Demountable, 4.80 x 8 Load Range B pneumatic tires. Dual front wheels on 3/4" tapered roller bearings. All wheels demountable from hubs.
Color: Safety Orange.
Controls & Wiring: Standard four speeds forward and reverse with heavy duty speed control with 1/4" x 5/8" (6.35 mm x 15.87 mm) buss bar contacts. Speed control and brake by single foot treadle. Enclosed heavy duty forward and reverse switch with key lock. Power wire is No. 4 insulated cable.
Steering: Vertical steering wheel.
Frame: All-welded steel unitized body. Heavy duty 16 gauge diamond plate facing on all exterior surfaces. Flush diamond plate steel deck.
Bumper: Heavy duty 1/4" x 4" (0.6 x 10.2 cm.) steel bumper welded to frame.
Horn and Indicators: 12 volt electric horn, battery discharge indicator.
Backrest: Padded backrest and rear guard rail for opertor safety.

OPTIONAL FEATURES AT ADDITIONAL COST:
230 or 244 a.h. batteries, 40 amp Lestronic II charger, 5.5 m.p.h. to 6.5 m.p.h. (8.9 to 10.4 km.p.h.) speed, 6.7 h.p. motor, special paint color, solid cushion or Steelguard tires for increased load capacity, lift-out or roll-out battery box, dolly, 4, 5 and 6 step bolt-on ladders, headlight, taillight, hourmeter, automatic coupling hitch, PWR-TRON speed control, longer wheelbase and bed sizes, clipboard and undercoating, FLAT OUT tire treatment.

This product conforms to requirements for Type E as stated in O.S.H.A. Standard Section 1910.178 (Powered Industrial Trucks) and ANSI B56.8-1988.

Specifications, standard equipment, accessories and modifications subject to change without notice.

The optional roll-out battery box on the Model SC 1-75 offers quick and easy access.

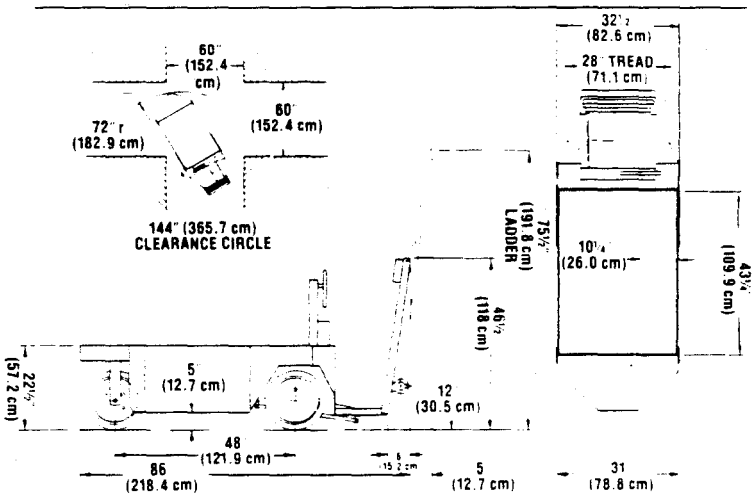

EXHIBIT 10.5

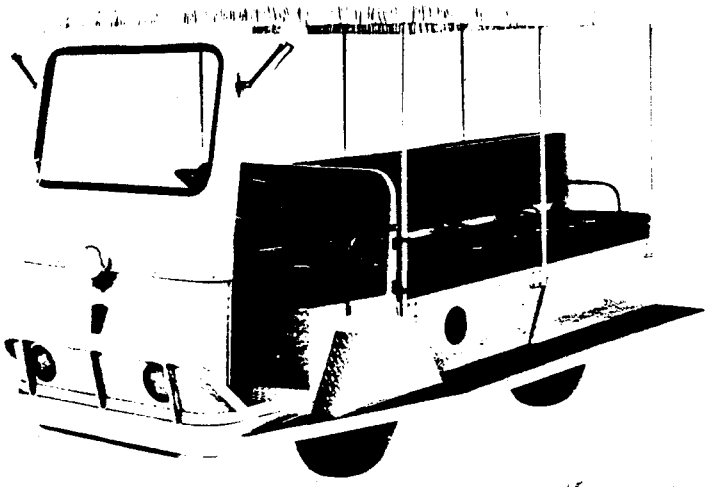

Other special vehicles are available upon request. Please contact your local distributor for more information.

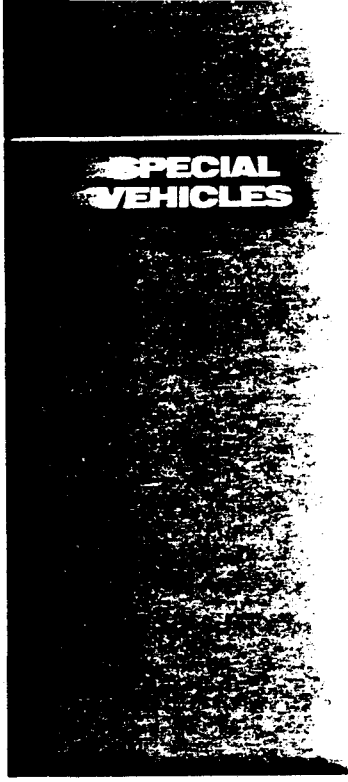

The Model B 2-48 is shown here as a 10-passenger tram equipped with surrey top, windshield, and side view mirrors.

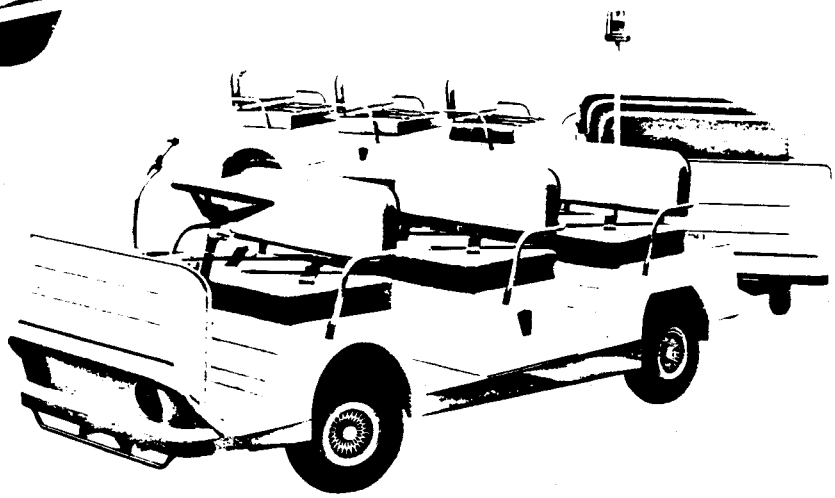

The B 2-48 tram becomes an effective, efficient people mover with tram trailers connected. Shown here with an optional P.A. System and amber strobe light on pole.

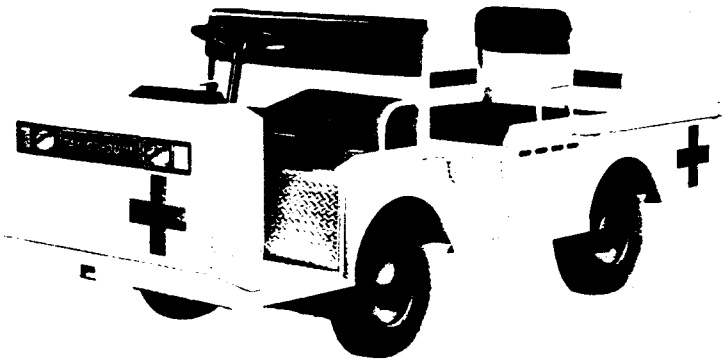

The Model B 2-10 may become an in-plant or on-site emergency vehicle. Here, it is equipped as a hospital ambulance, with nurse's seat, stretcher area, and drop side rails.

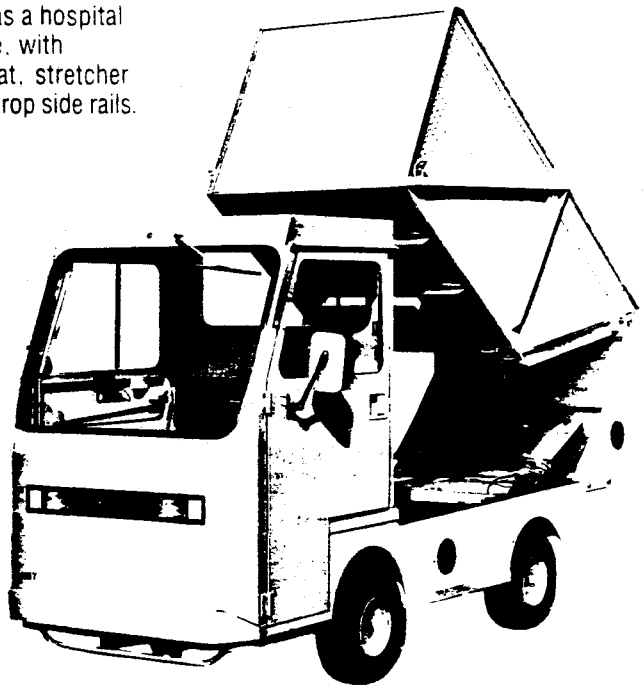

The same B 2-48 that was a personnel carrier is now an in-plant welding truck, equipped with optional welding cut-out, lockable tool box, and side view mirrors.

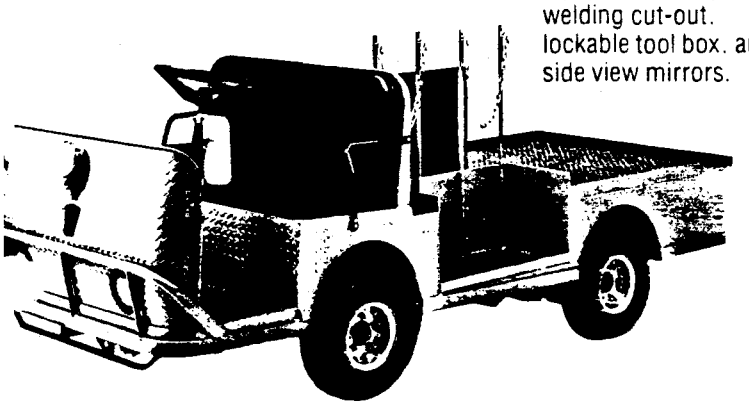

In this hard-working configuration, the Model B 2-48 is equipped with a steel cab and hydraulically-powered dump body.

EXHIBIT 10.6

INTENTIONALLY BLANK

11. VEHICLE MANEUVERING AREAS

Vehicles inside the tunnel are going to require room to maneuver, to bypass other vehicles, to turn around, and to negotiate several curves in bypasses, labyrinths, and parking areas. They will also require areas for maintenance, repair, parking, and battery charging.

E SHAFT AREA - 55-FT SHAFT

The E shaft tunnel will have to be protected from radiation by 20-ft thick shields of concrete forming a labyrinth shown in Exhibit 11.1. The exhibit shows the minimum requirements for the maneuvering of a three-passenger transport vehicle towing a trailer with tools.

The middle shield will be a sliding shield, so that when magnets are being delivered, they do not have to be taken around the labyrinth. Exhibit 11.2 shows the shape of the sliding shield, and Exhibit 11.3 shows a detail of the walking-beam type mechanism that propels the shield from one side to the other. Exhibit 11.4 shows the principle of operation of the walking beam. Exhibit 11.5 shows pictures of Hillman rollers typically used for these applications.

Magnets and magnet transporters will have to turn the corner at the intersection of the E shaft tunnel with the beam tunnel. A layout for that situation is shown in Exhibit 11.6, which shows that a piece of the corner will have to be chopped off to allow the magnet to make the turn. The clearance between the magnet and the supports as it goes around the curve is approximately 6 inches. Therefore, automated steering is advisable in this area.

E SHAFT AREA - 30-FT SHAFT

A labyrinth will also be required for radiation protection in this area. However, this labyrinth will be fixed.

Vehicles will have to negotiate a radiation protection labyrinth as shown in Exhibit 11.7. This layout shows the minimum dimensions required for a three-passenger vehicle with a trailer to negotiate the curves.

Exhibits 11.7 and 11.8 also show the space required by different vehicles in making a U-turn.

TUNNEL TURNAROUND AREAS

Dimensions of turnaround areas required inside the tunnel niches are also shown on Exhibits 11.7 and 11.8. for different vehicles.

INTERACTION REGION BYPASS

Exhibit 11.9 shows the minimum radius that should be used around interaction region bypasses.

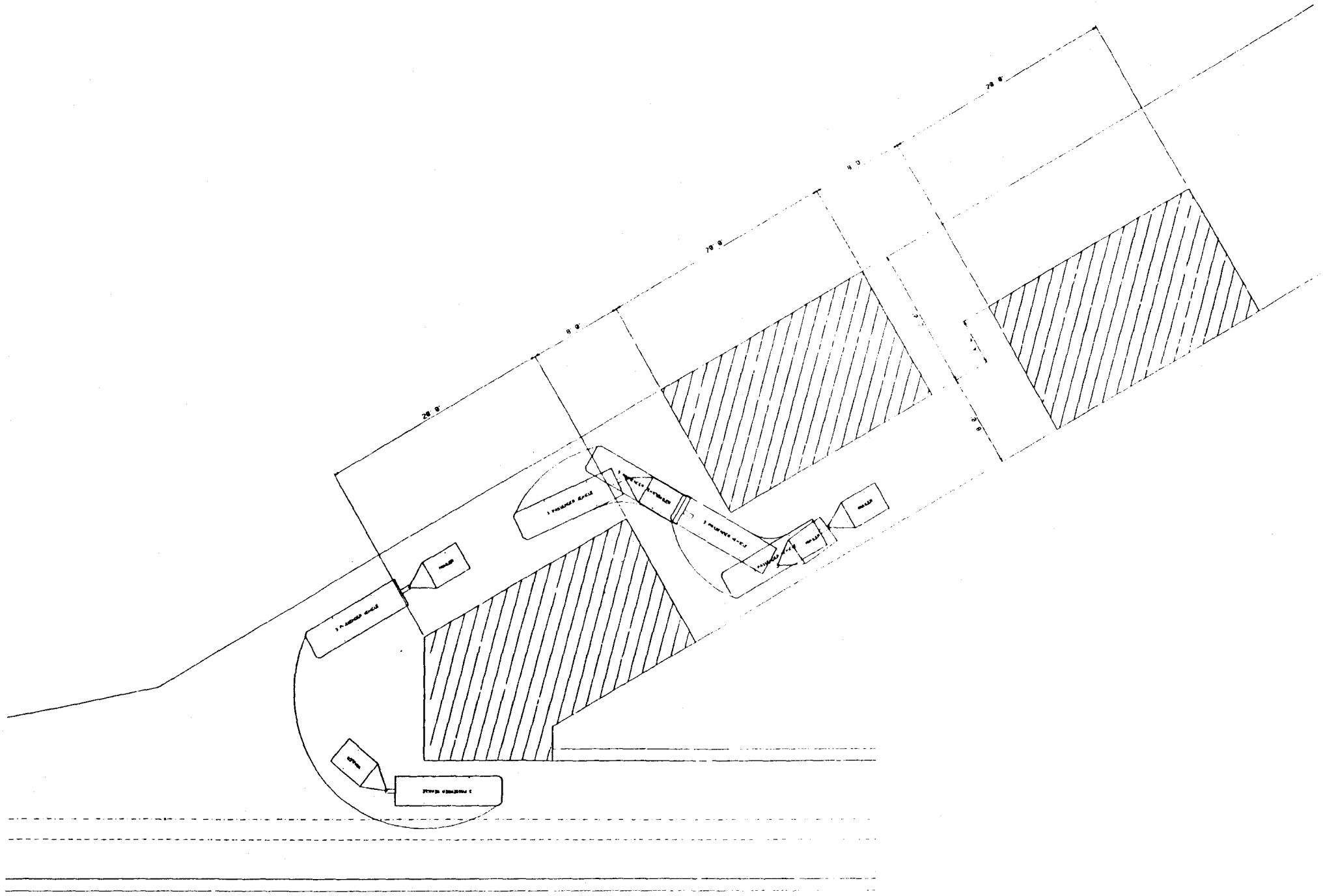

EXHIBIT 11.1
E SERVICE AREA PASSENGER

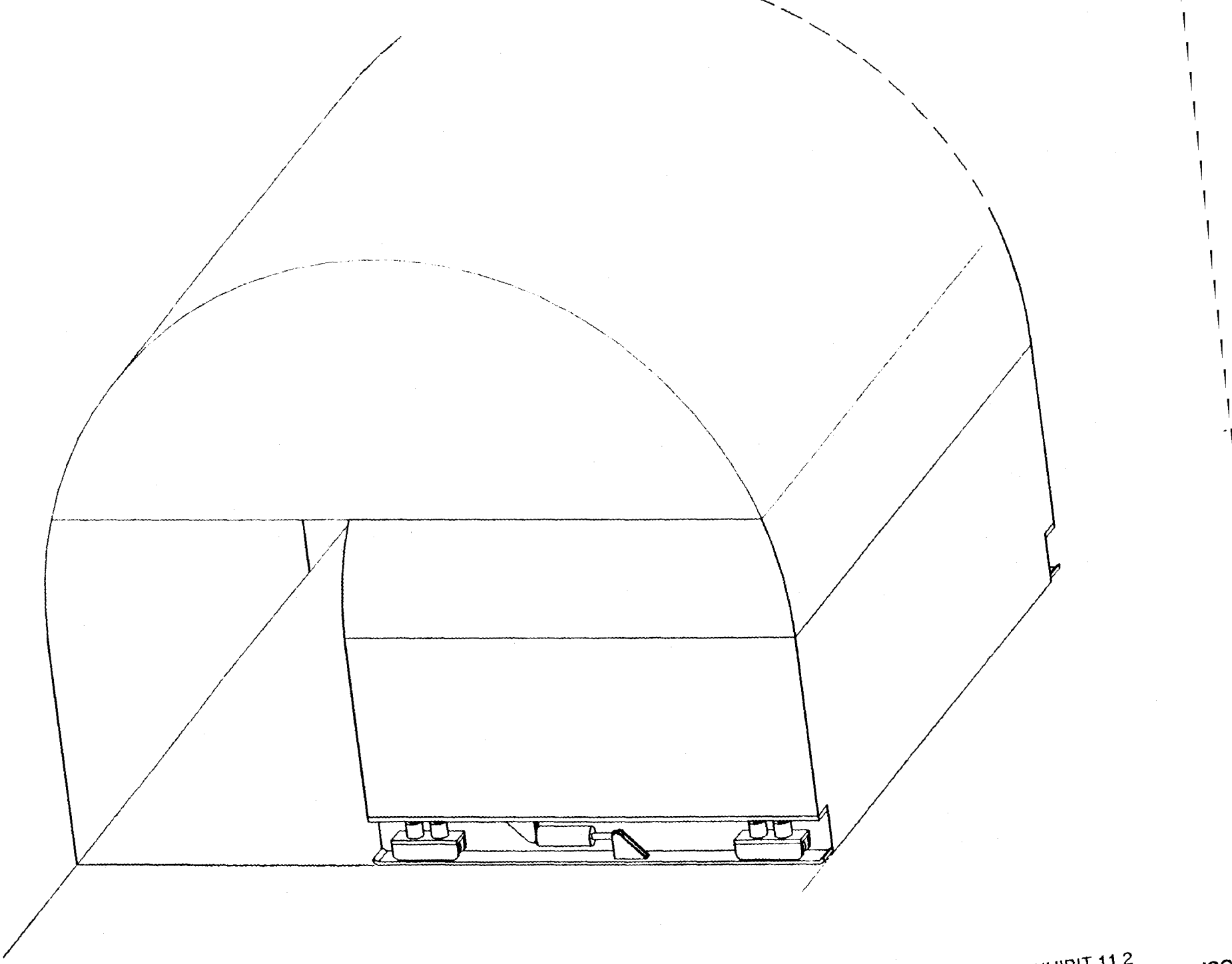

EXHIBIT 11.2
CONCRETE SHIELD ISO

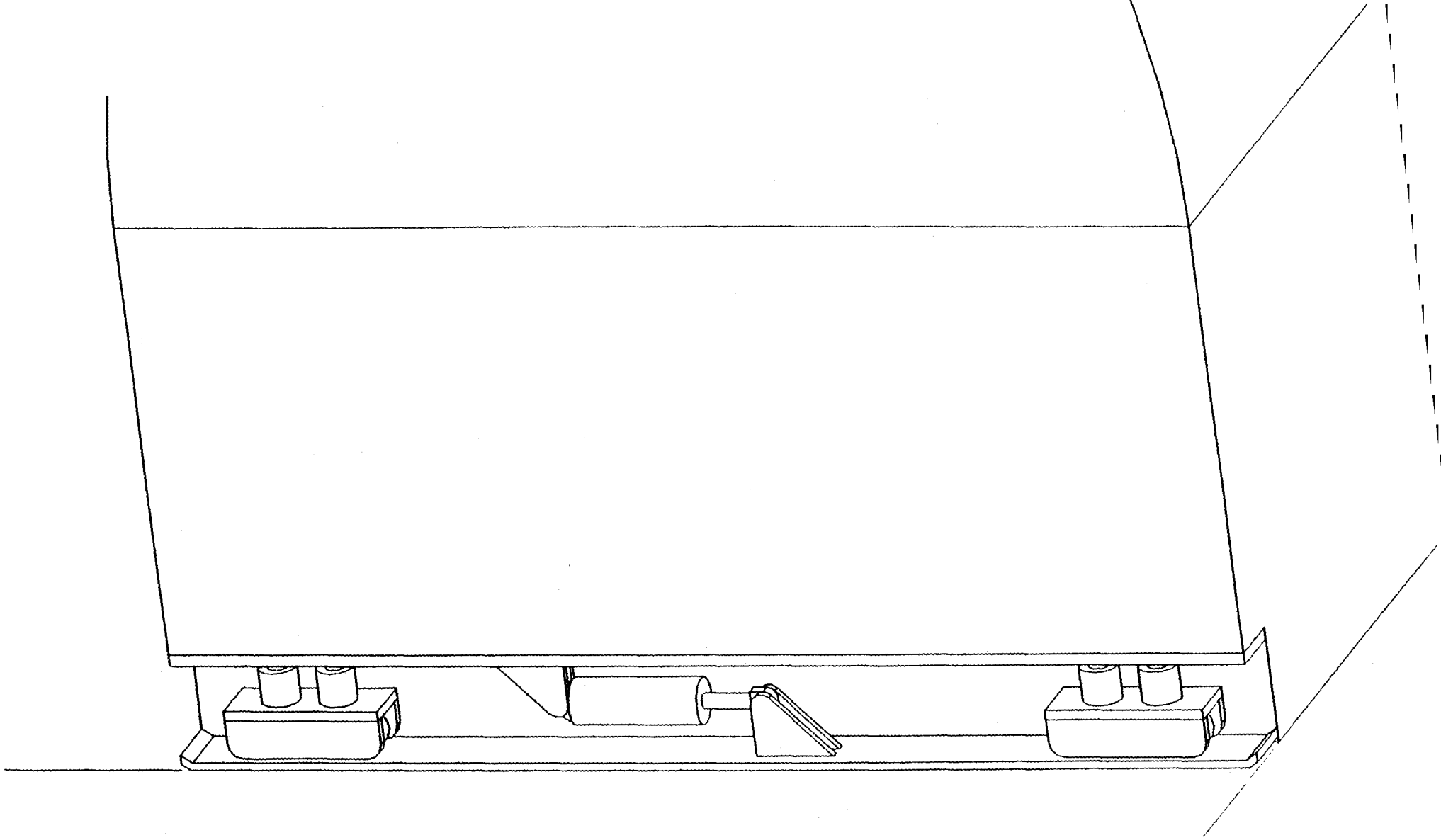

EXHIBIT 11.3
CONCRETE SHIELD WALL
BEAM DETAILS

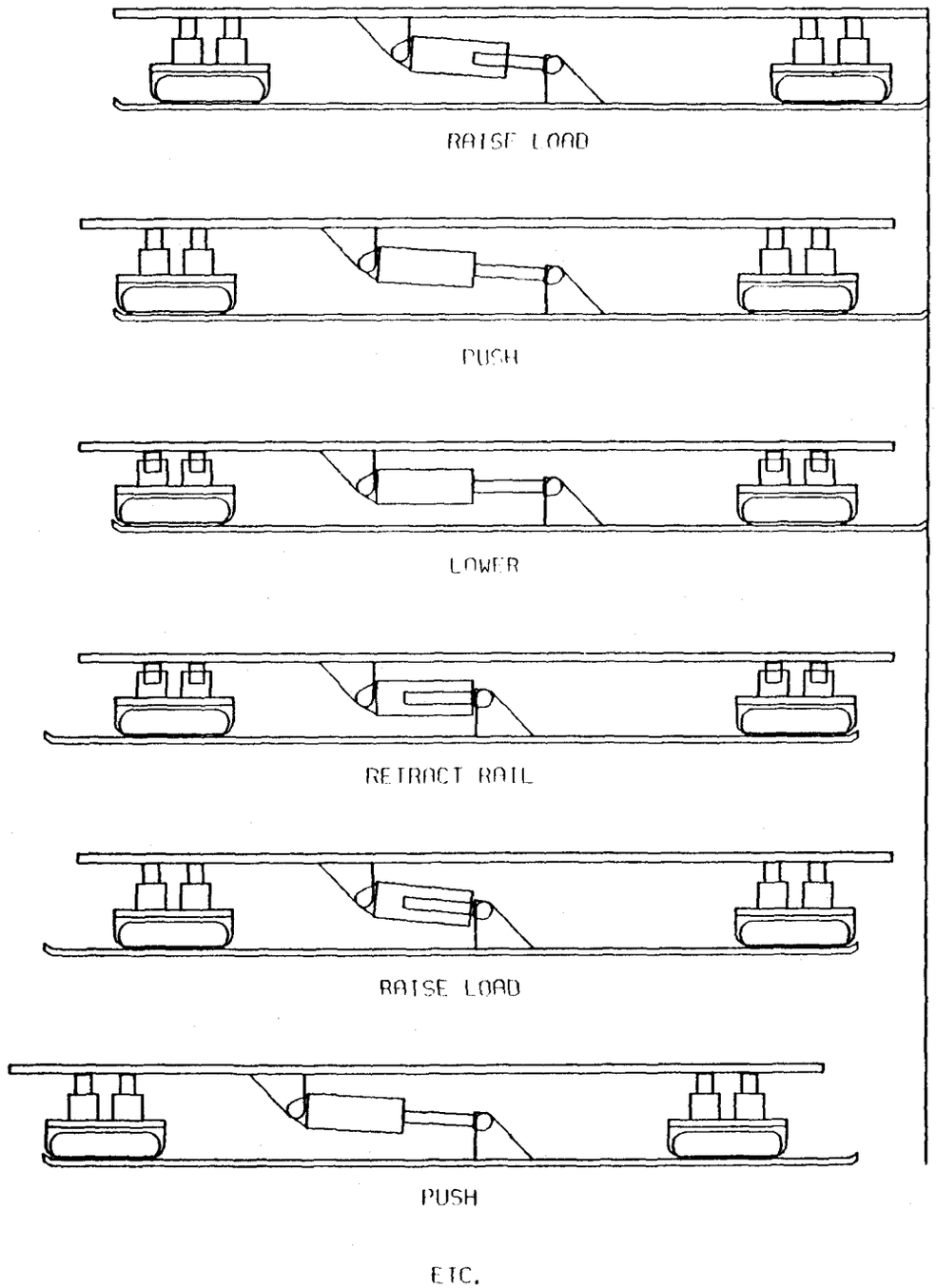

EXHIBIT 11.4
WALKING BEAM STEPS

ERS ROLLERS

(Formerly Express Rollers)

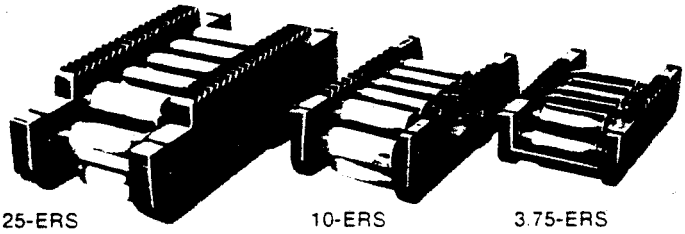

25-ERS 10-ERS 3.75-ERS

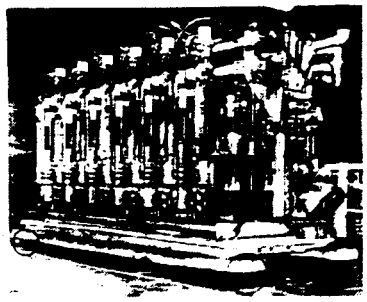

A new glass bottle machine is installed in line on Hilman Rollers.

ERS rollers are the lowest profile high capacity rollers in the world! Designed on the endless chain concept, the ERS Rollers' style is basically for straight line motion; yet each can be outfitted with a swivel attachment for turning and positioning. They are the economy leaders in the Hilman Roller line. Seven different sizes move from 15 to 400 tons per set of four with heights ranging from under 3 inches (76.2 mm) to under 6 inches (152.4 mm).

Model	Old Model Number	Capacity Metric Tons Ea.	Capacity Metric Tons Set of 4	Height In.	Height Mm.	Width In.	Width Mm.	Length In.	Length Mm.	Weight Lbs.	Weight Kg.	Number Contact Rolls
3.75-ERS	2	3.75	15	2¾	70	4⅝	117	8⅝	219	16	7.3	5
5W-ERS	2W	5	20	2¾	70	5½	140	8⅝	219	20	9.1	6
10-ERS	3	10	40	3⅜	86	5¼	133	10⅜	264	24	10.9	6
12.5W-ERS	3W	12.5	50	3⅜	86	5⅝	143	10⅜	264	32	14.5	6
25-ERS	4	25	100	4¾	121	6⅞	175	15⅝	397	78	35.4	6
50-ERS	5	50	200	5⅝	143	7¾	197	23	584	156	70.8	7
100X-ERS	5X	100	400	5⅝	143	8	203	23	584	165	74.8	8

ERS SWIVEL ATTACHMENTS

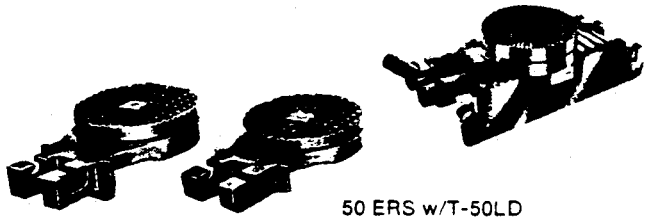

50 ERS w/T-50LD Swivel Attachment

Each ERS Roller can be outfitted with a respective Swivel Attachment for pivotability and height flexibility. Attachments are chrome steel ball bearing, available with swivel-locking device (add suffix "L") for greater efficiency. Three sizes steering handles fit all attachments. Coefficient of turning friction is about 2% of load with small handle. The D top is diamond steel; the P top is the Preload Pad type.

Model	Old Model Number	Fits Model	Combined With Roller* Height* In.	Height* mm.	Width* In.	Width* mm.	Length* In.	Length* mm.	Weight Lbs.	Weight Kg.
T-3.75LD or P	T-2L	3.75-ERS	4⁷/₁₆	113	5⅞	149	11¼	283	13	5.9
T-5WLD or P	New	5W-ERS	4⁷/₁₆	113	5⅞	149	11¼	283	13	5.9
T-10LD or P	T-3L	10-ERS	5¹/₁₆	129	6	152	12¾	324	14	6.4
T-12.5WLD or P	New	12.5W-ERS	5¹/₁₆	129	6	152	12¾	324	14	6.4
T-25LD or P	T-4L	25-ERS	7⅛	181	8	203	18	457	40	18.1
T-50LD or P	T-5L	50-ERS	8	203	8	203	25¼	641	45	20.4
T-100LD or P	T-5XL	100X-ERS	8	203	8	203	25¼	641	45	20.4

*For P type swivel, add ¾" (19mm) in height, 1½ lbs in weight.

STEERING HANDLES

H 36 E 36" Length - 914 mm Fits up to T-12.5WLD
H 48 E 48" Length - 1219 mm Fits all Attachments
H 60 E 60" Length - 1524 mm Fits all Attachments

SUPER HEAVY DUTY ROLLERS

500-XT

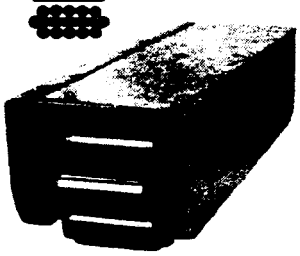

300-XT

A large step-up transformer is set on Hilman Rollers.

Hugh structures skate almost effortlessly on Super Rollers. With load capacities of 100 to 500 tons per unit, virtually any gigantic load becomes transportable. Typical applications include reactors, bridge sections, barges, ship sections, entire oil rigs and offshore modules. Under 10 inches (254 mm) high, these all-hardened-steel rollers almost always require a steel moving surface. Their durability combined with a 5% coefficient of friction make them super-savers.

Model	Old Model	Capacity Tons Metric Tons	Height In.	Height Mm.	Frame Width* In.	Frame Width* Mm.	Length In.	Length Mm.	Weight Lbs.	Weight Kg.	Contact Rolls
100-XT	5XT	100	6¾	172	8	203	21	533	195	88.5	7
100-XOT	5XOT	100	6¾	172	14	366	21	533	245	111.1	7
150-XTL	—	150	6¾	172	8	203	30	762	292	132.5	11
150-XOTL	—	150	6¾	172	14	366	30	762	350	158.8	11
150-XTW	—	150 $1250	6¾	172	9⅞	251	21	533	285	129.3	14
150-XOTW	—	150	6¾	172	16	406	21	533	335	152.0	14
200-XTDL	—	200	6¾	172	8	203	36	914	370	167.8	14
200-XOTDL	—	200	6¾	172	14	366	36	914	415	188.2	14
200-XTDW	5XTDW	200	6¾	172	11⅝	295	21	533	325	147.4	14
200-XOTDW	—	200	6¾	172	21	533	21	533	385	174.6	14
200-XTDWC	—	200	6¾	172	14½	368	21	533	427	193.7	14
200-XOTDWC	—	200	6¾	172	21	533	21	533	507	230.0	14
300-XT	6X	300 $2780	10	254	10¾	273	34	864	665	301.6	8
300-XOT	—	300	10	254	21	533	34	864	775	351.5	8
500-XT	7X	500	10	254	20	508	34	864	1285	582.9	16
500-XOT	—	500 $4735	10	254	30	762	34	864	1398	634.1	16

* All D & T hole patterns must be specified.
* Small charge for drill and tap work.
* Swivel tops are available on special order.
* Width pertains to top plate only, roller body same as XT model.

EXHIBIT 11.5

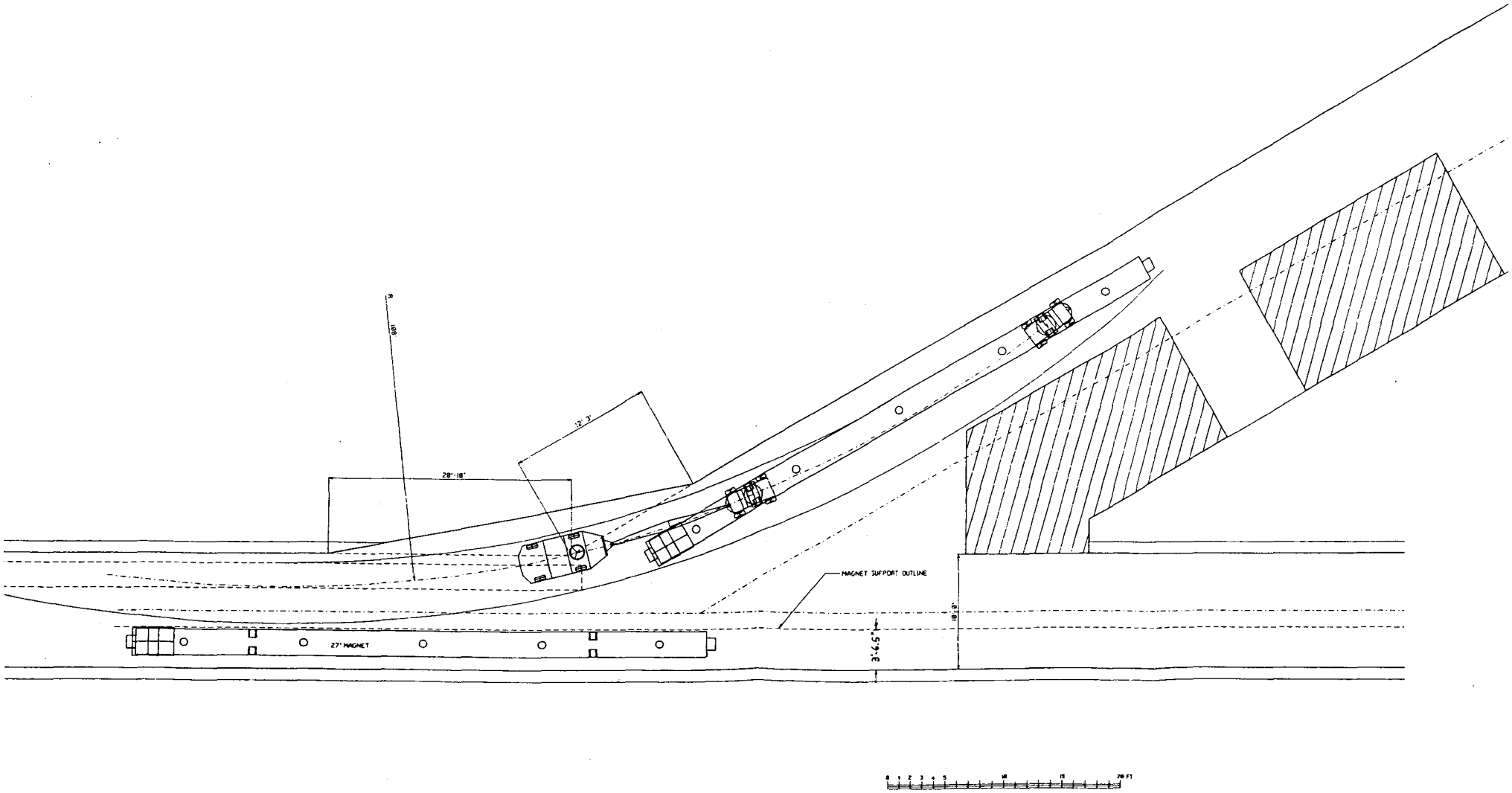

EXHIBIT 11.6
E SERVICE AREA MAGNE
DELIVERY

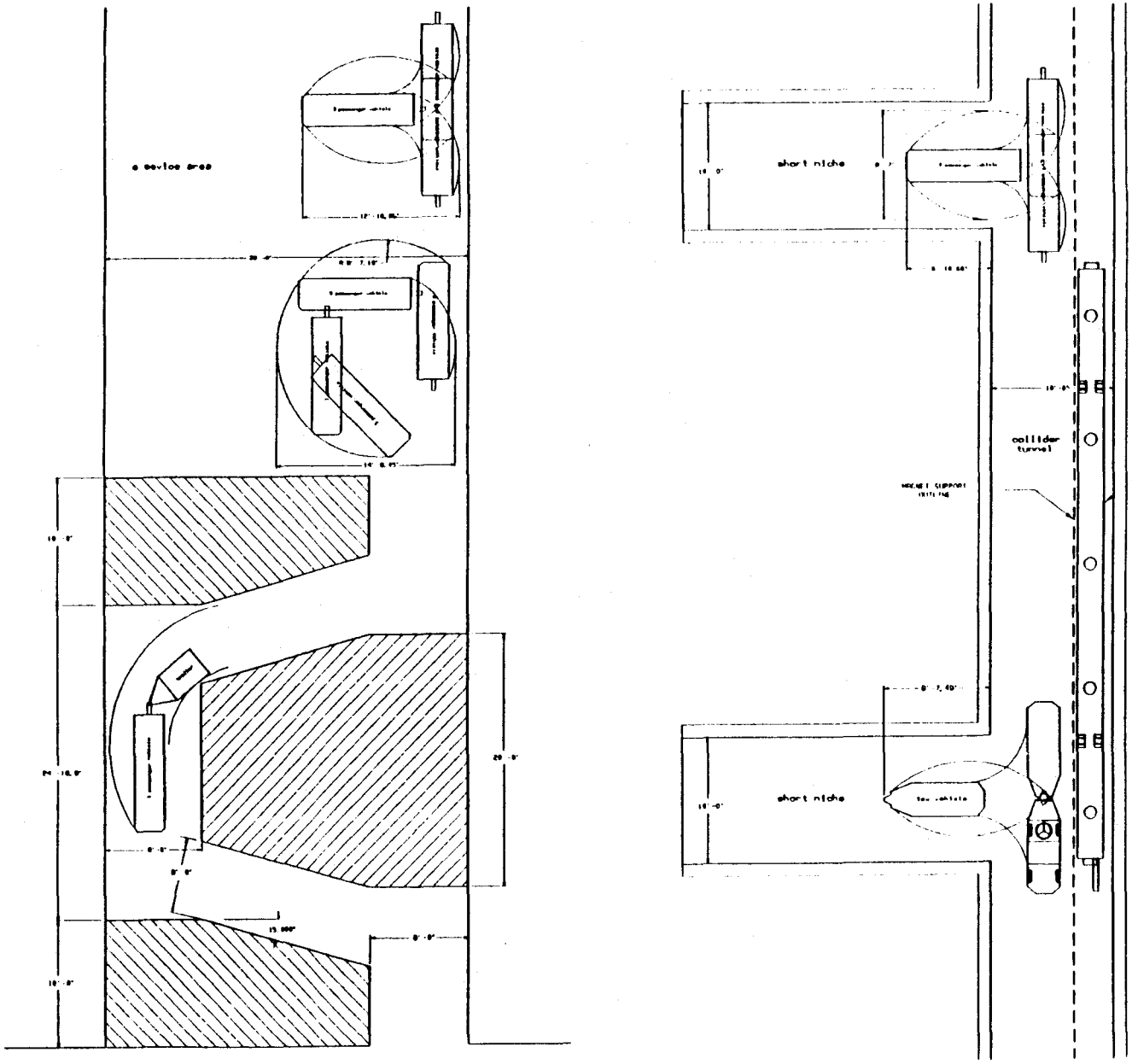

EXHIBIT 11.7
TURNING SPACE REQUIREMENTS THREE-PASSENGER AND TOW VEHICLES

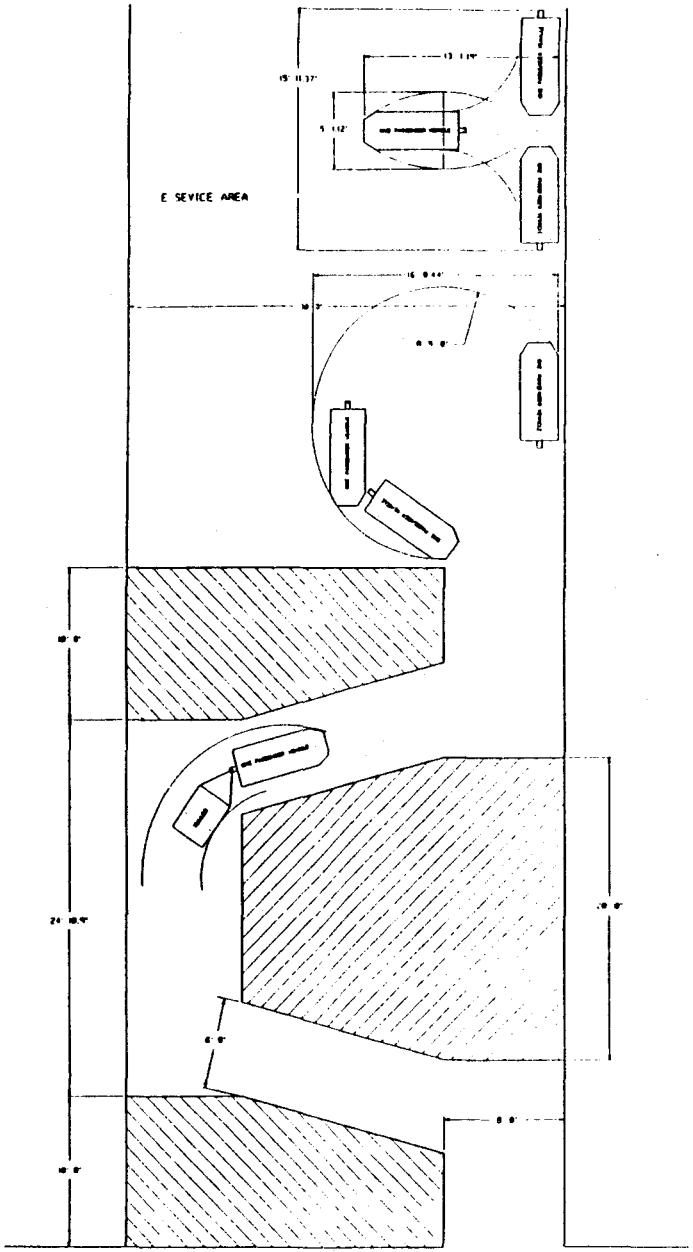

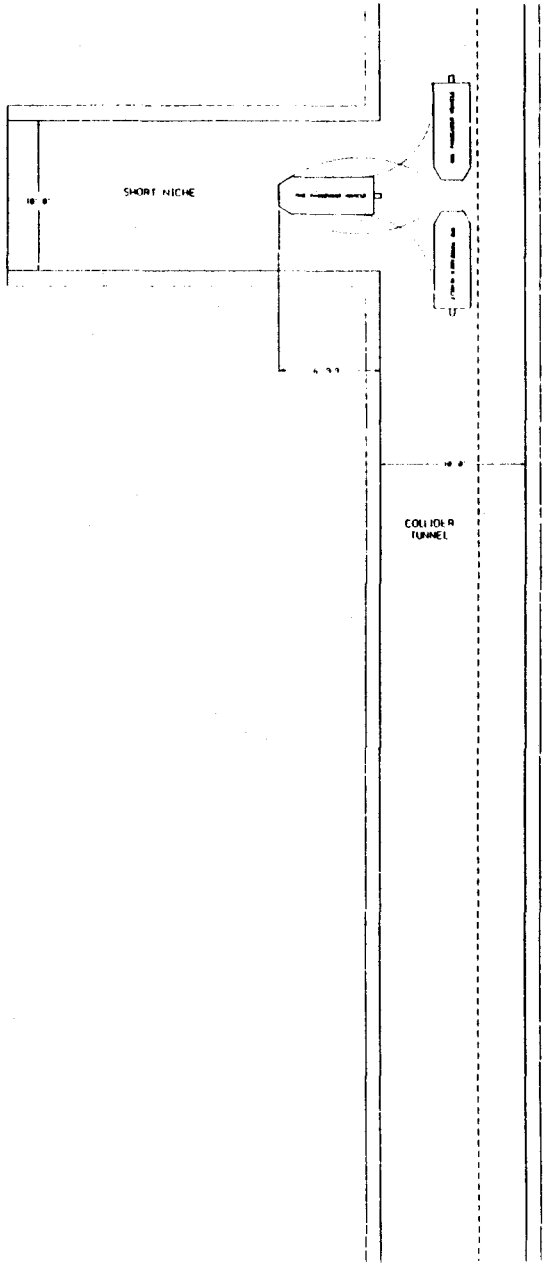

EXHIBIT 11.8
TURNING SPACE REQUIREMENTS
ONE-PASSENGER VEHICLE

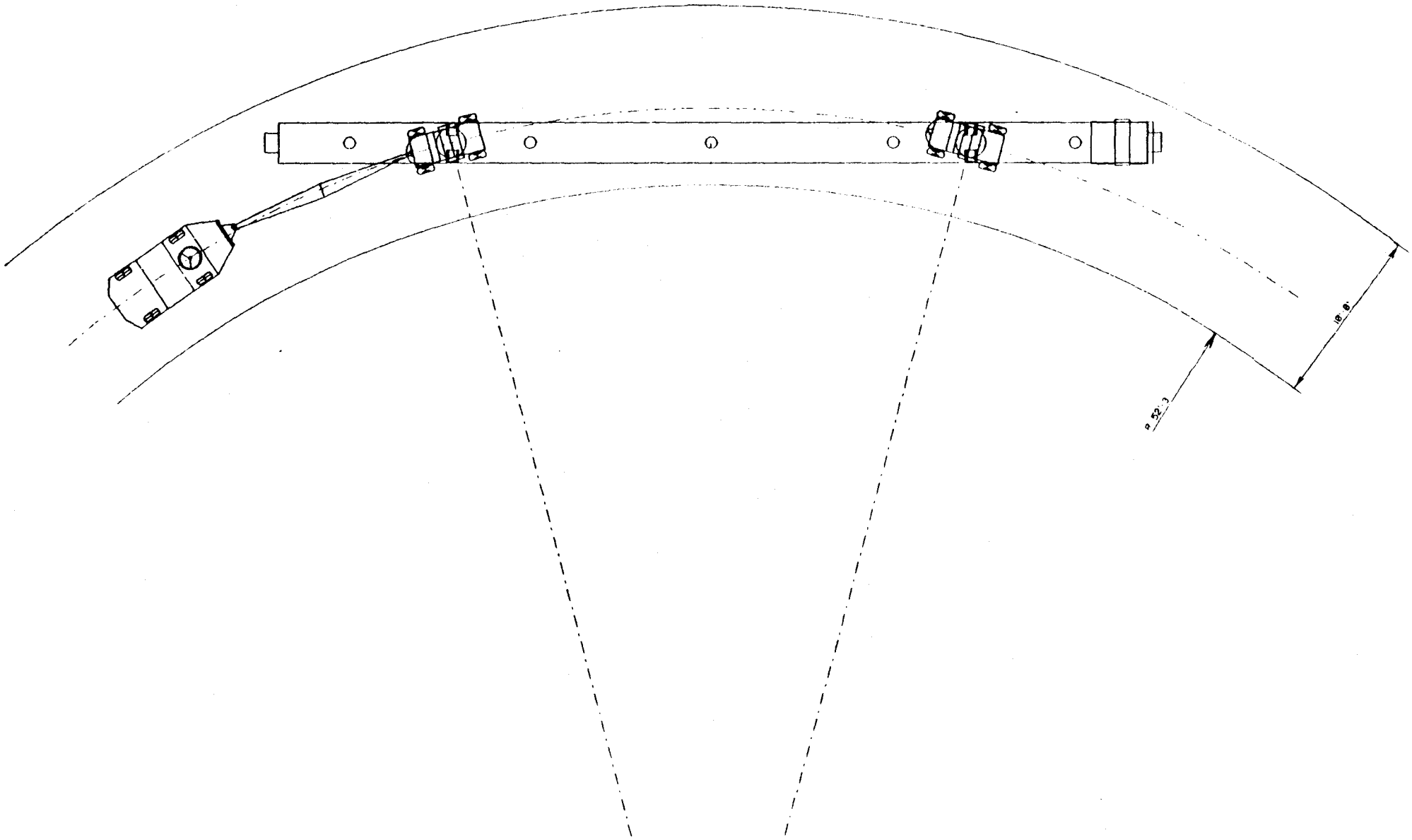

EXHIBIT 11.9
27-FT MAGNET TURNING RADIUS FOR 10-FT-WIDE PASSAGE

INTENTIONALLY BLANK

12. TUNNEL LAYOUT

In order for magnets, equipment, and utilities to fit in the tunnel, and for transport, installation, and maintenance vehicles to operate and maneuver, accurate layouts have to be made, with all items represented.

Layouts of tunnel cross sections should be made for every area. Exhibit 12.1 shows a preliminary layout of the most typical cross section. Layouts of other cross sections were not produced for lack of accurate information. The layout shows all power and control cables and cable trays with their proper estimated dimensions and clearances. The cable trays have been layed out to give proper access for installation and maintenance.

Two 30-inch-wide traffic lanes have been provided for transport and maintenance vehicles. Passing clearance is only 4.5 inches between vehicles and between vehicles and magnet supports, with a 3-inch clearance to the edge of the ditch.

A 5-inch clearance envelope has been allowed for tolerance in the tunnel boring. Since the beam cannot deviate from its alignment, an allowance must be made for the magnet support location to be compatible with the tunnel alignment tolerance. This means that the effective floor space is diminished by this amount, because the beam and magnet supports cannot be allowed to deviate from the beam alignment to follow the tunnel alignment. The electrical trays and wiring are not affected as much, because they can be lowered if necessary and can also follow the tunnel alignment in the horizontal direction.

As shown in the layout, under the worst condition, one of the wheels of the transport vehicles may end up riding partially on the ditch. In this event, two things can be done: make the ditch narrower or decrease the clearance between vehicles when passing.

An attempt was made in the layout to preserve a 1-ft, 4-inch nominal clearance around the magnets so that a person could slide around to the back of the magnets for inspection, mounting, or assembly assistance, etc. This clearance does not take into account the tunnel boring tolerances. However, a person could still slide around the magnets with a 1-ft clearance, which would be close to the worst case of tunnel boring misalignment.

Exhibit 12.2 shows the same tunnel cross section during installation of the bottom magnet. During this operation, the lifting devices will have to be retracted and the magnet lifted over the hydraulic unit in order to get the transporter out of the way. Assuming the worst case in tunnel tolerances, the clearances available are rather minimal in this situation.

It is also suggested that during ASST operations, tunnel boring tolerance constraints be simulated to experience the worst situations to be encountered.

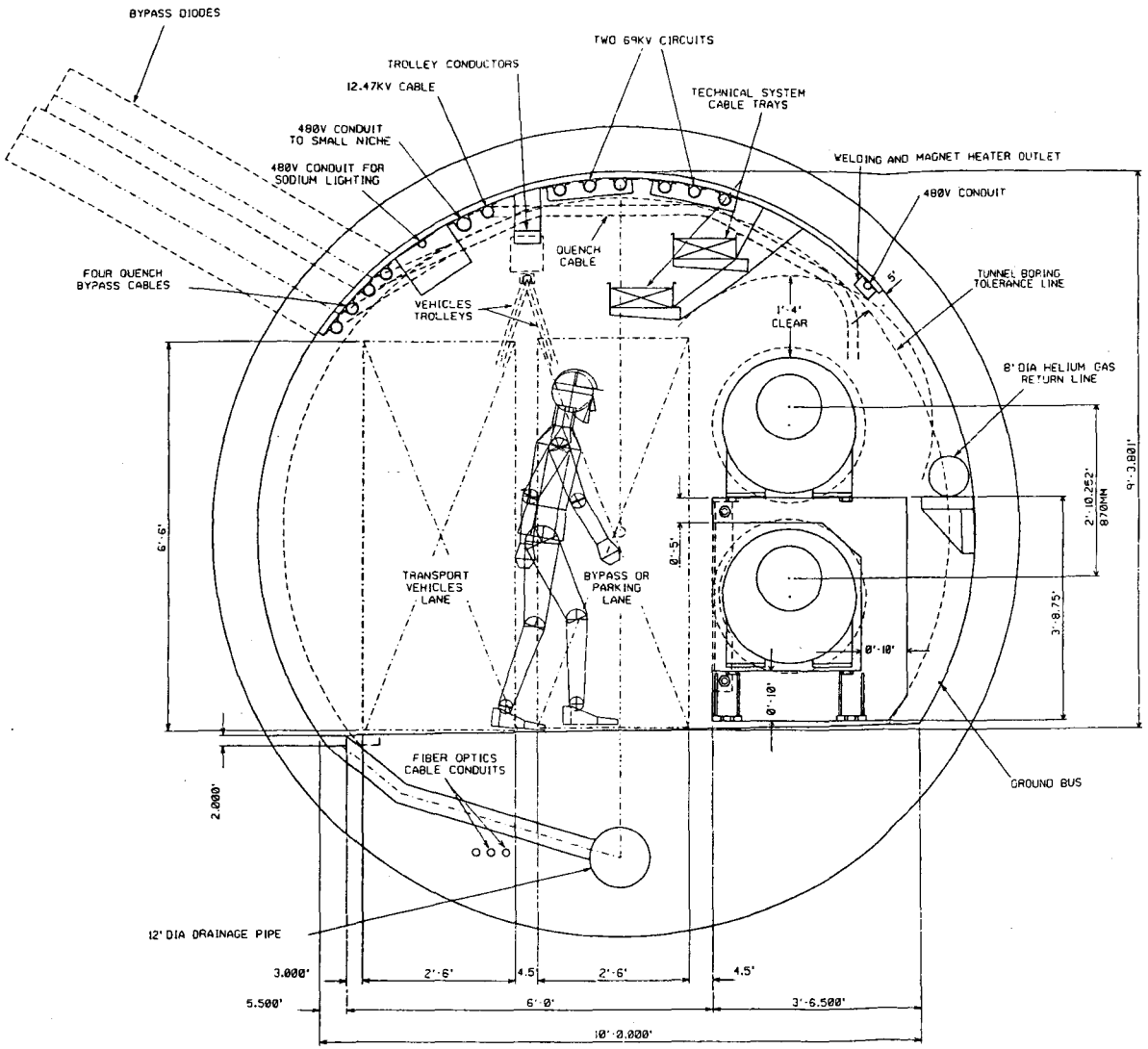

ALT 'F'

APRIL 28, 1990

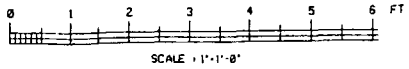

EXHIBIT 12.1
SSC TUNNEL CROSS SECTION
27-FT MAGNET

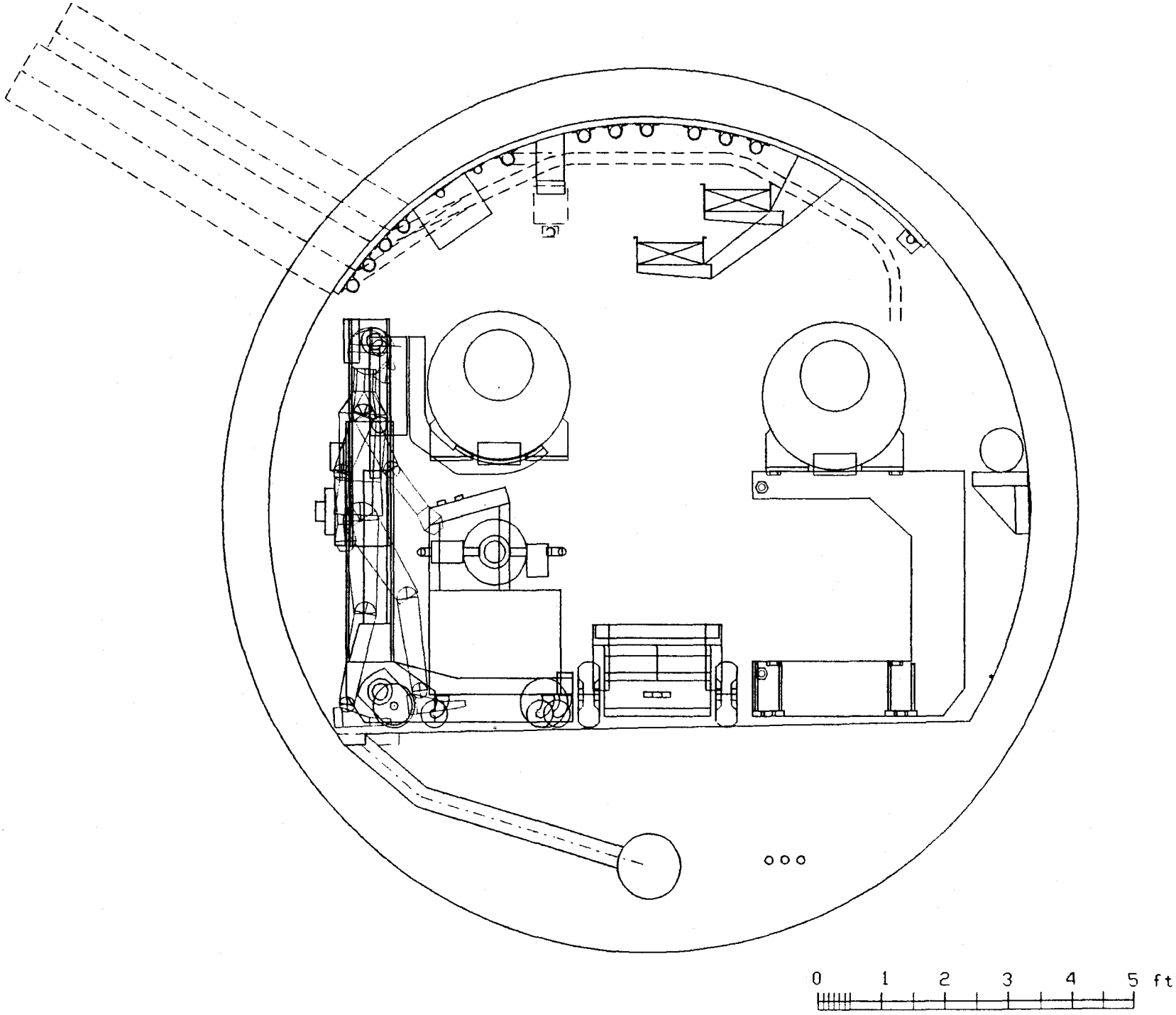

EXHIBIT 12.2
TUNNEL CROSS SECTION
DURING MAGNET INSTALLATION

INTENTIONALLY BLANK

13. PROTOTYPES, BIDDERS LISTS, AND SPECIFICATIONS

Designs shown in this report are conceptual and do not take advantage of all the experience and off-the-shelf equipment that may be available. Vendors have been researched and contacted, and some information has been obtained, but in general, vendors have not been willing to spend much time without a more formal approach.

It is assumed that all vehicles and systems will be prototyped and tested in the ASST and PIF programs.

It is suggested that formal prequalification documents, with all requirements clearly defined, be prepared for vendors of all the transport systems considered. These documents would also request detailed information regarding vendor experience, complete catalogs, and samples of similar type of work performed.

It is also suggested that vendor lists be prepared for the different types of equipment. These vendor lists could be compiled in a cooperative effort between the different groups that have previously been involved in such systems, such as the SSC Lab, RTK, Lawrence Berkeley Livermore Laboratory, Fermi Laboratory, etc.

Prequalification documents should be sent to these vendors and responses evaluated and short listed. The information obtained should be cataloged and made available to the engineers involved in the design.

Simultaneously with the prequalification effort, detailed specifications should be written for each type of equipment or system. The specifications would be accompanied with rather detailed conceptual drawings and design criteria, so vendors would have no doubt as to the intent, function, and physical limitations of the equipment.

Once the prequalification documents are received and evaluated, short-listed vendors would be sent bid documents and the specifications and drawings. These vendors would bid on prototypes only at this time.