SSCL-SR-1047

The Superconducting Super Collider

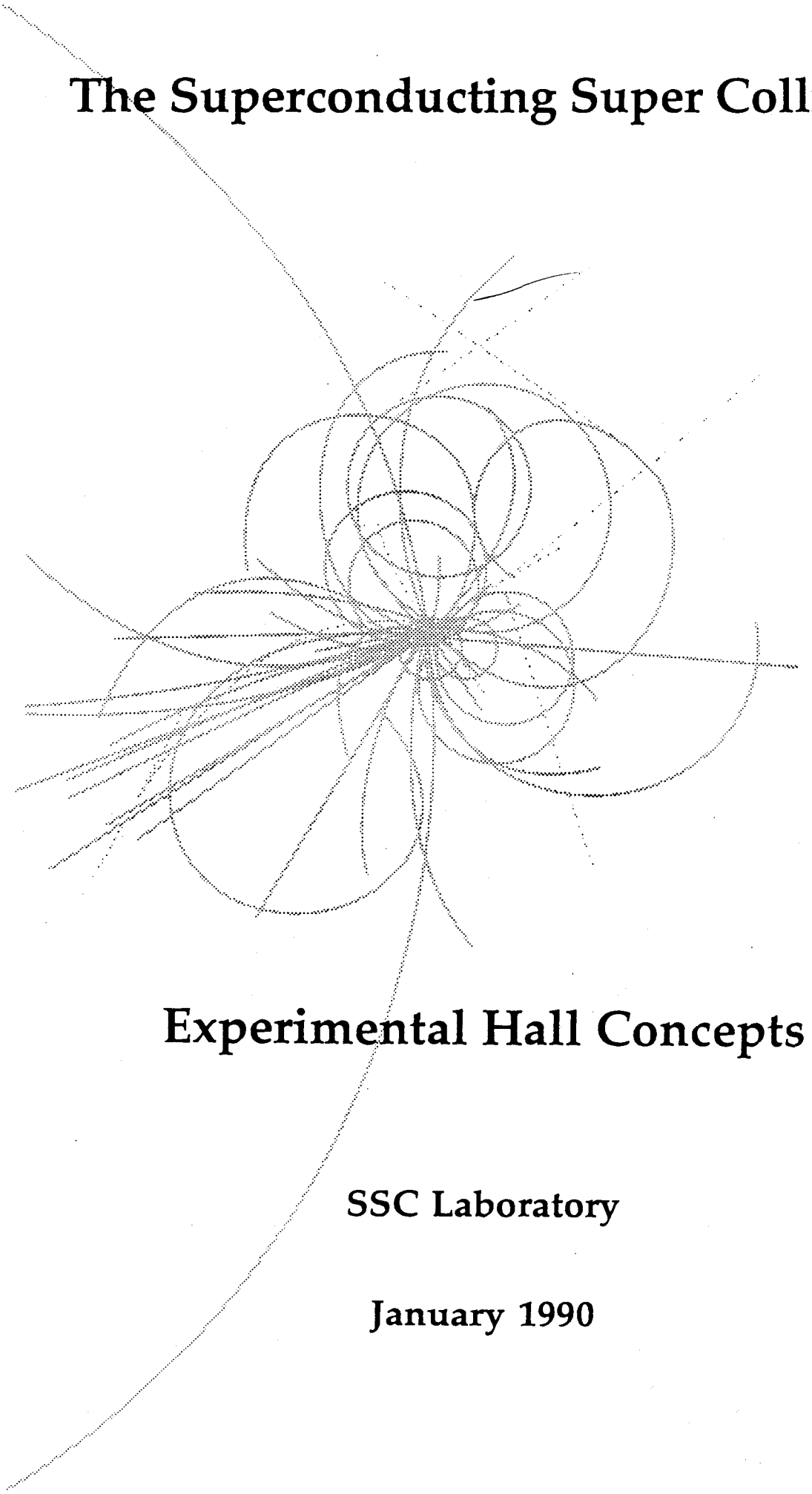

Experimental Hall Concepts

SSC Laboratory

January 1990

Table of Contents

1.1 Layout of the SSC and Experimental Areas 1
2.1 Model for the Experimental Program 2
2.1.1 Layout of the Interaction Regions 2
2.1.2 Model of Experiments and Underground Halls 2
3.1 Hall Design Descriptions 3
3.1.1 Large Halls Version A 4
3.1.1.1 Detector Examples 4
3.1.1.2 Hall Description 4
3.1.1.3 Assembly 5
3.1.2 Large Halls Version B 6
3.1.2.1 Detector Description 6
3.1.2.2 Hall Description 7
3.1.2.3 Assembly 8
3.1.3 Medium Halls Version A 9
3.1.3.1 Detector Description 9
3.1.3.2 Hall Description 10
3.1.3.3 Assembly 11
3.1.4 Medium Hall Version B 12
3.1.4.1 Detector Description 12
3.1.4.2 Hall Description 13
3.1.4.3 Assembly 14
3.1.5 Small Halls 15
3.1.5.1 Examples 15
3.1.5.2 Hall Description 15
3.1.5.3 Assembly 15
3.1.6 Test and Calibration Halls 16
3.1.6.1 Calibration Beam Specification 16
3.1.6.2 Secondary Beam Requirements 16
3.1.6.3 Hall Description 17
3.1.6.4 Operations 18
3.1.6.5 Functional Description 19
4.1 References 20

Figures. In order of appearance in the text.

Figure G-01. Schematic layout (key plan) of the SSC with experimental halls.
Figure G-02. Profiles of experimental halls with geological features.
Figure G-03. Interaction regions with excavation limits.
Figure IR2-10. Exploded view of the LSD detector.
Figure IR2-11. Plan and section views of the LSD detector.
Figure IR2-01. Isometric view of the experimental hall for LSD.
Figure IR2-02. Plan and sections of LSD hall and detector.
Figure IR2-03. Isometric view of the excavation for the LSD hall.
Figure IR2-04. Plan and sections of the excavation for the LSD hall.
Figure IR2S-01. Cut and cover construction sequence, steps 1 through 4.
Figure IR2S-02. Cut and cover construction sequence, steps 5 through 8.
Figure IR2-12. LSD assembly sequence, steps 1 and 2.
Figure IR2-13. LSD assembly sequence, steps 3 and 4.
Figure IR2A-01. Isometric view of NMD detector in large hall, version A.
Figure IR2A-02. Plan and section views of the NMD detector in large hall, version A.
Figure IR2A-10. Exploded view of the NMD detector.
Figure IR2A-11. Plan and section view of the NMD detector.
Figure IR2A-12. NMD assembly sequence in large hall, version A, steps 1 and 2.
Figure IR2A-13. NMD assembly sequence in large hall, version A, steps 3 and 4.
Figure IR3-10. Exploded view of L* detector.
Figure IR3-11. Plan and section view of L* detector.
Figure IR3-01. Isometric view of the L* experimental hall.
Figure IR3-02. Plan and section views of the L* hall and detector.
Figure IR3-03. Isometric view of the excavation of the L* experimental hall.
Figure IR3-04. Plan and section views of the excavation of the L* hall.
Figure IR3-12. L* assembly sequence, steps 1 and 2.
Figure IR3-13. L* assembly sequence, steps 3 and 4.
Figure IR8-10. Exploded view of BCD detector.
Figure IR8-01. Isometric view of version A medium hall.
Figure IR8-02. Plan and section views of version A medium hall and BCD detector.
Figure IR8-03. Isometric view of the excavation for version A of the medium hall.
Figure IR8-04. Plan and section views of the excavation for version A medium hall.
Figure IR8-12. BCD assembly sequence, steps 1 and 2.
Figure IR8-13. BCD assembly sequence, steps 3 and 4.
Figure IR5-10. Exploded view of the D0 Upgrade detector.
Figure IR5-11. Plan and section views of the D0 Upgrade detector.
Figure IR5-01. Isometric view of the version B medium experimental hall.
Figure IR5-02. Plan and sections of version B medium hall and D0 Upgrade detector.
Figure IR5-03. Isometric view of the excavation of the version B medium hall.
Figure IR5-04. Plan and sections views of the excavation, version B medium hall.
Figure IR5-12. Assembly sequence of D0 Upgrade detector.

Figure IR1S-01. Small hall cavern construction sequence, steps 1 through 4.
Figure IR1S-02. Small hall cavern construction sequence, steps 5 through 8.
Figure IR1-01. Isometric view of the small experimental hall.
Figure IR2-02. Plan and section views of the small experimental hall.
Figure CH-01. Isometric view of calibration hall.
Figure CH-02. Plan and section views of the calibration hall.
Figure CH-03. Plan and section detector arrangement for LSD and BCD calibration.

Tables

Table 1. Model of Experiments and Underground Halls 3

Table 2. Dimensions of the Large Solenoid Detector 5

Table 3. Precision Muon Detector Main Parameters 8

Table 4. Dimensions of the Bottom Collider Detector 11

Table 5. Dimensions of the D0 Upgrade Detector 14

Table 6. Specifications for SSC Test/Calibration Beams 17

Table 7. Particle Yields for High and Lower Energy Beams 18

Experimental Hall Concepts

Supplement to the Site-Specific Study of SSC Support Facilities for Four Generic Detector Designs

At the Superconducting Super Collider Laboratory (SSC), there will be several areas at which the proton beams in the collider rings are brought into collision. At these interaction regions (IRs), apparatus will be assembled in order to accomplish a diverse experimental physics program at the SSC Laboratory. Experimental apparatus will vary significantly in size, weight, and complexity depending in detail upon the physics goals of the particular experiment. Experimental apparatus will also require test and calibration in particle beams extracted from the Medium Energy Booster (MEB) and/or High Energy Booster (HEB). Requirements for underground halls to house experiments or calibration buildings in the test beams will depend upon the character of the evolving experimental program at the SSC. The nature of the experimental program at the collider has not been determined and awaits decisions in response to proposals for specific experiments some years hence. Nevertheless, it is possible to provide a realistic description of the type of experimental facilities that will be required to house and operate a representative experiments at the SSC. Descriptions of specific SSC experimental concepts are contained in numerous studies and will not be given in detail in this report.[1] In this document, we concentrate on the facilities needed to house experiments.

We emphasize that the halls and detectors described in this report represent a program that was created for planning purposes only. The actual program will only be determined after the proposals have been submitted to the SSC Laboratory and reviewed by the Program Advisory Committee (PAC). The choice of experiments for this report was dictated by a desire to create as varied a program as possible and the need to use detectors for which there was already substantial amount of descriptive material available. This document, is not intended to be a specification of or limit on the SSC program in any way.

This document is a supplement to the *Site-Specific Study of SSC Support Facilities for Four Generic Detector Designs*.[2]

1.1 Layout of the SSC and Experimental Areas

A schematic layout (key plan) of the SSC is given in Figure G-01 showing the locations of the IRs and the test beam area. Interaction regions IR-1 to IR-4 are located in the west cluster and regions IR-5 to IR-8 are located in the east cluster. In this report, unless otherwise noted, we will assume that the inner bypass leg in the east cluster will not be constructed initially and thus IR-6 and IR-7 represent a possible future expansion path for the experimental program. Also shown in Figure G-01 is a utility section on the east side of the ring that might also be used for future experiments. Profiles of the experimental halls

showing the geological structure of the sites are given in Figure G-02. A plan view of the halls showing the excavation limits is shown in Figure G-03.

2.1 Model for the Experimental Program

In order to determine the size and nature of the underground halls to house detectors, we have used available information on potential SSC experiments.[3] As was explained above, the precise nature of the SSC experimental program will only be defined after receipt of proposals by the laboratory. Using workshop and other studies, we have developed possible models for the experimental program at the SSC solely for the purpose of determining the requirements for underground halls and other support facilities. The models developed do not reflect the final choices that will be made about the initial complement of SSC detectors but do reflect the best possible estimates of experimental facilities that are possible at this time.

2.1.1 Layout of the Interaction Regions

The basic layout of the collider has been shown previously in Figure G-01. Experiments will be located in the west cluster at up to four IRs (IRs 1–4) and in the east cluster, also at up to four IRs (IRs 5–8). The IRs in the west cluster are arranged in a bypass configuration, two regions located on each leg of the bypass configuration. In our model, we assume that both "legs" of the west bypass arrangement have been fully instrumented to transport beams and that IRs 1–4 have been developed. Also in our model, we assume that only one leg of the bypass arrangement in the east cluster is instrumented initially to transport beams; thus, only IRs 5 and 8 are developed. To summarize, our model assumes that six IRs have been developed for the initial complement of experiments.

2.1.2 Model of Experiments and Underground Halls

It is neither possible nor fruitful to consider facilities requirements for all possible detectors at this time. Therefore, we have chosen a subset of the possible detectors to study in detail in order to determine the underground hall requirements. The representative detectors we have selected are the Large Solenoid Detector (LSD) and the L* detector to set requirements for large halls and the Bottom Collider Detector (BCD) and the D0 Upgrade to determine the requirements for medium-sized halls. The requirements for the small underground halls have not been examined in as much detail as those of the larger halls but are consistent with housing experiments such as the exotic spectrometers of reference 5. It should be emphasized that these are representative choices of detector types and in no way constitute a decision as to the final nature of the SSC experimental program.

The layout of the halls based on these detector concepts is given in Figure G-01. The two large detectors are located in the inner leg of the bypass arrangement on the west cluster, the two medium-sized detectors in the east cluster and two small experiments on the outer leg of the west cluster. This arrangement is summarized in Table 1.

Table 1
Model of Experiments and Underground Halls

Interaction Region	Depth to Beam (ft)	Type of Hall	Assembly Hall?	Detector Model
1	183	Small	Yes	To be determined
2	171	Large	No	LSD
3	133	Large	No	L*
4	140	Small	Yes	To be determined
5	154	Medium	Yes	D0 Upgrade
6	153	Future	—	Future
7	129	Future	—	Future
8	138	Medium	Yes	BCD

The location of the experiments is determined by geological considerations, experiment operational considerations and accelerator operations. The geological conditions to support the large, heavy detectors are superior in the west cluster favoring the location of the large halls in the west cluster. Also, the location of the small experiments/halls in the west cluster will allow optimal operation of the large detectors. Operation of the collider requires approximate equality in the configuration of the final IR optics in neighboring IRs . Hence, pairing the two large detectors, capable by definition of operating at the maximum luminosity, and the two more modest detectors, possibly operating at reduced luminosity at least initially, is implemented in this model.

3.1 Hall Design Descriptions

Detectors for experiments at the SSC have been proposed and studied in the Proceedings of the 1984, 1986, and 1988 Summer Studies at Snowmass,Colorado[4] and in the Proceedings of the 1987 Workshop on Experiments, Detectors and Experimental Areas at Berkeley, California.[5]

Detectors will require halls sized for their construction and operation. These halls, large, medium and small, are described below. Large and medium halls are subdivided into version A and version B. The version A large hall is adequate for almost all proposed large detectors. Version B of the large halls is larger than version A and is designed to house the few very large detectors proposed to date. Versions A and B of the medium halls are required by the two very dissimilar medium detectors of our program model. It is emphasized that the detector models referred to in this section are only used as examples of current detector planning to aid in determining hall and surface facilities parameters. The description for detector halls presented here was developed by creating three-dimensional models of the various detectors in a computer-aided design (CAD) system and then creating construction and assembly scenarios using the models.

3.1.1 Large Halls Version A

Version A of the large halls will be built to house a class of large 4π multipurpose detectors. A 4π detector will measure the energies of electrons, muons, and jets over a large fraction of solid angle. These detectors are expected to weigh from 20,000 to 60,000 tons and to have on the order of a half-million channels of electronics. Because of the scale of these detectors, it is envisioned that they will have to be built in place. The halls will have to be dimensioned to accommodate the detectors and their assembly. The major axis of these halls will be along the collider beam line.

3.1.1.1 Detector Examples

Of the possible examples of experiments for the large hall version A, the LSD which includes a 9-m-diameter by 16-m-long superconducting solenoid, presents the greatest handling problems. For this reason, the version A hall has been designed to accommodate the construction of the LSD. To demonstrate that the version A large hall will accommodate other detectors of this class, the assembly of a dissimilar large detector, the nonmagnetic detector (NMD), is also shown within this hall.

For specificity in this study, we have chosen a version of the LSD with a liquid ionization calorimeter, a central tracker, a central muon detection system, and forward calorimeters and muon detectors, as shown in Figure IR2-10. Plan and section views of the LSD detector are shown in Figure IR2-11. The central detector extends over ± 3 units of rapidity with additional forward calorimetry extending to ± 5.5 units of rapidity. The calorimetry will be monolithic with both electromagnetic and hadronic components. The coil encloses both the central calorimetry and the central tracking devices. Outside the calorimetry and coil, the muon system will identify and measure muons above 10 GeV and will cover a rapidity range of ± 5. Detailed specifications are given in Table 2.

3.1.1.2 Hall Description

The large detectors will require many years to assemble and will be built in the interaction halls on the beam line. In our model both large halls will be on the inside leg of the west experimental diamond bypass configuration. Also, because of the length of the construction phase of these experiments, the personnel and equipment shafts are located to give earliest access to the hall. The surface facilities are not built directly over the hall to allow work on detector components to begin before completion of the hall construction. The size of the hall is determined by the construction needs of the detectors and by the requirement that it should be possible to disassemble the detector for repair. No shielded assembly hall is required for detector construction since collider operations can bypass the large detector halls.

Figure IR2-01 shows an isometric view and Figure IR2-02 shows plan and elevation views of an experimental hall for the LSD. The cut-and-cover excavation for the large hall, version A is shown in Figure IR2-03, and the plan and section views are shown in Figure IR2-04. The sequence for construction of the halls is shown in Figures IR2S-01 and IR2S-02. For the LSD hall, there will be a 5-m-diameter personnel shaft which includes an elevator, a stairwell, and a vent duct. There will also be a 9-m equipment shaft with stairwell and vent duct. Components lowered down the equipment shaft would be moved by transfer carts to a position where they would be accessible to the overhead crane in the hall. Both the

Table 2
Dimensions of the Large Solenoid Detector

	Weight (t)	Inner Radius[a] (m)	Outer Radius[b] (m)	Length (m)	Z1[c] (m)	Z2[d] (m)
Inner vertex chamber		0.02	0.15	0.3		
Tracking	2	0.40	1.60	8.0		
Central electromagnetic calorim.	200	1.60	4.10	8.0		
Forward electromag. calorim. (2)	70	0.15	2.20		17.0	17.5
Central hadronic calorim.	4,800	0.70	4.10			
Forward hadronic calorim. (2)	1,930	0.75			17.5	20.0
Coil	900	4.10	4.60	16.0		
Central Muon Toroid	19,000	4.20	7.10	21.4		
Intermediate Toroid	10,000				11.2	15.2
Forward Toroids (2)	1,520	0.42	2.50		20.0	25.0
Muon Chambers						
Total	38,422			50.0		

[a] Inner radius is the radial distance to the innermost part of the detector element.
[b] Outer radius is the radial distance to the outermost part of the element.
[c] Z1 is the distance from the IP along the beam to the nearest part of the element.
[d] Z2 is the distance from the IP along the beam to the farthest part of the element.

equipment and personnel shafts are outside the excavation perimeter to allow early completion of the shafts. Their precise location is determined by the excavation perimeter and radiation safety considerations. After completion of construction, there will be a 12-m by 9-m construction shaft to allow lowering of large preassembled components and, in particular, a half coil for the large solenoid. After construction, this shaft would be closed with movable shielding blocks for detector operation. A utility bypass tunnel is provided to allow the passage of a loaded collider magnet transporter or any other traffic that must avoid the detector hall.

The LSD hall is 80 m along the beam line and 28 m transverse to the beam with the IP located and 9.5 m above the floor of the hall and about 1 m off the hall center line. The total hall height is 29 m. Two overhead cranes on a common rail are provided, a 100/100-ton crane and a 100/20-ton crane. The hook height of these cranes is 25 m to allow the topmost components to be placed on the detector. The dimensions of the hall are based on access to the assembled detector, clearance for component retraction during maintenance of the central part of the detector, and lay down space for assembly of detector components.

3.1.1.3 Assembly

The assembly of the LSD in this experimental hall is described here. Construction of some subassemblies will take place in the surface facilities and off site. The assembly sequence is shown in Figures IR2-12 and IR2-13. This assembly sequence is only an example of such activities. A true assembly sequence requires a better definition of detector parameters.

Step 1: Assembly of the magnet yoke begins. This requires 10,000 to 13,000 tons of steel modules. The magnet yoke is assembled on the beamline and will not be moved. At peak speed, it is expected that about 100 tons of steel can be assembled per day. A temporary enclosure is constructed as a clean room to assemble the calorimeters which have to be protected from the dirty nature of the steel fabrication. The calorimeter weight is expected to exceed 5000 tons.

Step 2: All other heavy steel construction begins on the collision hall floor. This includes the 4 muon half toroids (2500 tons each) and two end cap calorimeter assemblies (3500 tons each). These components are designed to be movable and are constructed at convenient locations in the hall. Work continues on the calorimeters and tracking chambers. The two half coils of the large solenoid are preassembled on the surface and lowered into the collision hall. The coils are installed when the yoke is sufficiently complete to support the coil. Timing of this step is driven by completion of the coil.

Step 3: The calorimeter assembly is completed, the temporary enclosure is removed, and the calorimeter is installed inside the coil using specially designed transfer supports.

Step 4: The calorimetry and tracking components that were preassembled at the surface are lowered into the collision hall and installed on their respective support structures: muon toroids, end caps, and magnet yoke. The end cap toroids are rolled into position on the detector. Assembly of the forward components takes place as preassembled pieces are lowered into the hall from the surface. Final installation of electronics, utilities, and service takes place; checking and testing of the completed detector begins.

Similar construction sequences have been developed in this hall for the NMD. Hall size and access shafts are also adequate for this detector. Figure IR2A-01 shows an isometric view and Figure IR2A-02 shows plan and elevation views of the NMD detector in the large hall version A. The NMD detector is shown in Figure IR2A-10. Plan and section views of the NMD detector are shown in Figure IR2A-11. Figures IR2A-12 and IR2A-13 show an assembly sequence for the NMD in this hall.

3.1.2 Large Halls Version B

The version B large hall has been designed to house the L* detector. Its main feature is precise muon momenta measurements over a large fraction of solid angle. This detector will also measure electron and jet energies over a large fraction of solid angle. The main physical feature of this model detector is a magnet with an inner free diameter of 19 m and a free length of 28 m. The magnet coil plus return yoke will weigh approximately 55,000 tons. Detector components will add approximately 2500 tons and will have on the order of a quarter-million channels of electronics. Because of the scale of this detector, it will be built in situ. The hall will be sized to accommodate the detector and its construction, and its major axis will be along the collider beam line.

3.1.2.1 Detector Description

The detector for the version B hall, as shown in Figure IR3-10, employs a large magnetic volume filled with precision tracking chambers to measure muon momenta very accurately. Plan and section views of this detector are shown in Figure IR3-11. A preliminary version of this detector is described in the "Proceedings of the Workshop on

Experiments, Detectors and Experimental Areas for the Supercollider".[6] The hall design in this report is based on the description of this detector in "L* at the SSC".[7] This detector consists of, from the IP outward, a vertex detector, a transition radiation detector, an electromagnetic and hadronic calorimeter, precision muon tracking chambers, and the magnet coil. The volume within the magnet is octagonal, 19 m wide by 28 m long, with a field of 0.75 T. The muon tracking system consists of a barrel region of two rows of 16 elements and two end cap sections that have yet to be fully defined. Each barrel element will contain five chambers that will be held by their individual support frames fixed to the stable part of the magnet yoke. Suspended in the center of the magnetic volume is a stainless steel tube of approximately 6.5 m inner diameter by 9.0 m length that will house the calorimeter, transition radiation detector, and vertex detector. To cover the forward angles of less than 5 degrees from the beam line, there will be forward calorimeters situated just outside the magnetic volume. Specifications are given in Table 3.

Table 3
Precision Muon Detector Main Parameters

	Total Weight (t)	Inner Radius[a] (m)	Outer Radius[b] (m)	Length (m)	Z1[c] (m)	Z2[d] (m)
Inner vertex chamber		0.05	0.17	1.00		
Transition radiation detector		0.17	0.48	2.00		
Calorimeter barrel	1000	0.50	3.0	4.20		
Calorimeter end cap (2)	500	0.10	1.54		1.27	4.27
Forward calorimeter (2)	400	0.10	1.75		16.75	19.25
Muon chamber barrel (2)	320	3.50			0.10	13.50
Muon chamber end caps (2)	192	0.45	7.75		4.85	13.65
Magnet coils (2)	6800	9.50	11.50		0.30	13.50
Magnet iron	49000	11.36	13.5	16.25		

[a] Inner radius is the radial distance to the innermost part of the detector element.
[b] Outer radius is the radial distance to the outermost part of the element.
[c] Z1 is the distance from the IP along the beam to the nearest part of the element.
[d] Z2 is the distance from the IP along the beam to the farthest part of the element.

3.1.2.2 Hall Description

The large halls are on the inside leg of the west experimental diamond. As for the version A large hall, the construction for the version B large hall will be by open pit technique. Because of the length of the construction phase for the detector, the personnel and equipment shafts are located outside the excavation perimeter to give earliest access to the hall. Some surface facilities are not built directly over the hall to allow work on detector components to begin before completion of the hall construction. No shielded assembly hall is required for detector construction since collider operations can bypass the large detector halls.

Figure IR3-01 shows an isometric view and Figure IR3-02 shows plan and section views of the L* experimental hall. The cut-and-cover excavation for the large hall version B is shown in Figure IR3-03, and the plan and section views are shown in Figure IR3-04. The width of the collision hall is determined largely by the large warm 20-MW solenoidal magnet

and its assembly equipment. Rail tracks will be laid out on each side of the hall to carry magnet parts of hundreds of tons. Adding to the overall width will be the space required to run hall and detector services. The length of the hall consists of zones, the center zone occupied by the magnet and the adjacent end zones occupied with detector assembly areas and component lowering and unloading areas.

The hall is 108 m long, 40-m wide, and 37.5 m high with 40-m by 20-m construction shafts at each end. It is equipped with two 100/20-ton cranes on common rails. In the center, there is a shaped concrete cradle to house the base of the magnet yoke. Both cranes have a hook height of 32.5 m and a span of approximately 40 m. The cranes are used for handling the large quantities of steel required for the magnet yoke assembly, most of which would be lowered down a construction shaft by a mobile 300-ton crane on the surface. For loads larger than 300 tons, lifting towers will be installed in the construction shafts.

The 40-m by 20-m construction shafts are sized to allow the lowering of large pre-assembled pieces from the surface during construction. An example is a coil pancake weighing approximately 400 tons and measuring 23 m diameter by 1.2 m thick. After construction, the shaft would be plugged with shielding blocks and a mobile concrete cover for collider operation. The counting rooms shaft, 20 m by 28 m, is sized to accept counting room modules that are preassembled on the surface. The shaft, situated above the magnet, penetrates to within 8 m of the collision hall roof. The complete counting room complex will extend above ground. It includes an elevator and stairwells with vent ducts. On each side of the shaft there is a chicane, 5 m by 3 m, passing through the roof to the main hall creating detector services passages.

There are connecting tunnels situated at either end of the hall to the 9-m-diameter equipment and personnel shafts that permit the introduction of light equipment without removing the shielding plugs above the construction shafts. Each includes an equipment elevator, a stairwell, and vent duct. Their precise location is determined by the hall excavation perimeter and by radiation safety considerations. The collider utility bypass tunnel is provided to allow the passage of a loaded collider magnet transporter or any other traffic that must avoid the detector hall.

3.1.2.3 Assembly

A possible assembly sequence of the L* model detector hall is described below. Construction of most subassemblies will take place in the surface facilities or off site. The assembly sequence is shown in Figures IR3-12 and IR3-13.[8]

Step 1: Assembly of the magnet yoke begins. The central disk and calorimeter support tube is installed in the center of the magnet cradle. The bottom three octants of the yoke on either side of the central disk are installed, aligned, and cemented into place. Rails are installed to facilitate the movement of coil pancakes from shaft to magnet. It should be noted that work can proceed on the two ends of the detector independently.

Step 2: Preassembled coil pancakes are lowered into the hall at one end using lifting towers and moved into place on the installed rails. When all the pancakes are in place for one end of the magnet, the iron return crown is installed in much the same fashion as the pancakes, and the remaining five octants of yoke iron are stacked around the coil and secured.

Step 3: Coil assembly begins on the other end of the magnet and proceeds in a fashion identical to the first end. At the same time, precision muon tracking modules are being installed in the completed half of the magnet. After lowering into the hall, a tracking module is positioned around a service tube extending from the calorimeter support tube and slid into the magnet and secured. There are 16 modules per magnet half.

Step 4: After the magnet assembly is completed on the second end, the preassembled calorimeter is lowered into the hall on that end and installed into the central calorimeter support tube using a rail system similar to the magnet installation system. The preassembled calorimeter contains the transition radiation detector and vertex detector. When this operation and the muon tracking system installation on the first half are completed, installation of muon modules can begin on the second half of the detector. The return yoke doors on either end of the detector are installed after chamber installation is complete. Forward calorimetry is then installed. Final installation of electronics, utilities, and service takes place, and checking and testing of the completed detector begins.

3.1.3 Medium Halls Version A

Version A of the medium halls consists of two adjacent volumes, a collision hall where the interaction point (IP) exists and an attached assembly hall where major detector components are assembled. The major axis of the collision hall is along the collider beam line. This hall is sized to house the BCD model detector. There are several versions of detectors to study bottom quark physics with similar overall layouts. This hall would be suitable for any of these with little modification. The total weight of the BCD detector is approximately 12,000 tons, and it will have on order of half a million channels of electronics. Construction of heavy steel pieces, such as magnet yokes and hadron absorbers, will take place in the collision hall. The assembly hall is shielded from the collision hall so that work on detector components may take place while the collider is operating. The hall will be constructed so that major detector pieces may be moved between collision and assembly hall.

3.1.3.1 Detector Description

The BCD detector, as shown in Figure IR8-10, is designed to investigate bottom quark physics. Particles with bottom quarks are most copiously produced at small angles with respect to the beamline. Hence, the major axis of the BCD detector will be along the collider's beams. The specific detector described here is from the "Proceedings of the 1988 Summer Study on High Energy Physics in the 1990s".[9] The BCD detector is based on a dipole magnet geometry. The IP is at the center of a superconducting dipole surrounding the IP. The heart of the detector is a silicon vertex detector approximately 1 m long and 2 cm in radius. The regions between 5 and 25 degrees with respect to the beam line are instrumented in both directions from the IP, while a region between 1 and 5 degrees is instrumented in one direction. All three regions are instrumented in much the same way: vertex detection surrounded by straw tube tracking followed by Ring-Imaging Cherenkov (RICH) detectors and Transition Radiation Detectors (TRDs) for particle identification, followed by electron calorimeters, and finally muon detectors. The small angle arm has an additional spectrometer magnet that also acts to compensate the collider beams for the field of the central dipole. The

major components and dimensions of the BCD detector are given in Table 4. The total length of the detector is 50 m.

Table 4
Dimensions of the Bottom Collider Detector

	Inner Radius[a] (m)	Outer Radius[b] (m)	Length (m)	Z1[c] (m)	Z2[d] (m)
Magnet 1	2.0	5.0	5.0	−2.5	2.5
Magnet 2	2.0	4.0	3.0	12.0	15.0
Instrumented steel 1'	0.1	5.5	4.0	−6.0	−10.0
Instrumented steel 1	0.1	5.5	4.0	6.0	10.0
Instrumented steel 2	0.1	4.1	10.0	30.0	40.0
RICH 1'	0.1	3.0	1.5	−3.0	−4.5
RICH 1	0.1	3.0	1.5	3.0	4.5
RICH 2	0.1	2.0	2.0	16.0	18.0
RICH 3	0.1	3.1	4.0	23.0	27.0
Tracking 1'	0.1	3.0	0.5	−4.5	−5.0
Tracking 1	0.1	3.0	0.5	4.5	5.0
Tracking 2	0.1	1.9	0.8	10.5	11.3
Tracking 3	0.1	2.5	4.0	19.0	23.0
Tracking 4	0.1	3.1	1.0	27.0	28.0
TRD 1'	0.1	3.0	0.3	−5.0	−5.3
TRD 1	0.1	3.0	0.3	5.0	5.3
TRD 2	0.1	3.1	1.0	28.0	29.0
E&M 1'	0.1	3.2	0.7	−5.3	−6.0
E&M 1	0.1	3.2	0.7	5.3	6.0
E&M 2	0.1	3.1		29.0	30.0
Total			50.0	−10.0	40.0

[a] Inner radius is the radial distance to the innermost part of the detector element.
[b] Outer radius is the radial distance to the outermost part of the element.
[c] Z1 is the distance from the IP along the beam to the nearest part of the element.
[d] Z2 is the distance from the IP along the beam to the farthest part of the element.

3.1.3.2 Hall Description

In our model, the version A medium hall is at the northern experimental area on the outside leg of the east experimental diamond bypass. As noted above, the version A medium hall will have a collision hall and an assembly hall. This choice is made in the baseline model with no east bypass so that detector construction may continue in the assembly hall while the collider is operating. Construction of the version A medium hall will be by open pit technique. Because of the length of the construction phase for the detector, the personnel and equipment shafts are located outside the excavation perimeter to give earliest access to the hall.

Figure IR8-01 shows an isometric of the version A medium hall; Figure IR8-02 shows plan and section views of the hall and the BCD detector. The cut-and-cover excavation for

this hall is shown in Figure IR8-03; and the plan and section views are shown in Figure IR8-04. The width of the collision hall is determined largely by the width of the two dipole magnets. Adding to the overall width will be the space required to run hall and detector services. The length of the collision hall is determined by the overall length of the detector plus length for services. The collision hall is 60 m long, 18 m wide, and 20 m high. It is equipped with two 50/20-ton cranes on common rails with hook heights of 16 m. The IP is located 15.5 m from one end of the collision hall and 8 m from the ring inside wall. The assembly hall dimensions provide for adequate laydown and fabrication space for the detector. The dimensions and crane capacities of the assembly hall are the same as the collision hall.

The collision and assembly halls are connected by two equipment transfer tunnels. These tunnels are 7 m wide by 19 m long by 14 m high. They are positioned to provide good mobility between the two halls. The centerline of one tunnel is aligned with the IP to facilitate installation of the large vertex magnet. Each equipment transfer tunnel is provided with a shielding door with a storage recess. The door is 7 m thick and large enough to completely seal the tunnel. A 1-m-wide labyrinth around the shielding doors allows passage when the doors are closed. Shielding between the halls is provided by the 19 m of unexcavated rock between them. This thickness also maintains structural integrity of the rock.

There is a tunnel at one end of the assembly hall to a 9-m-diameter equipment shaft and a tunnel at the opposite end to a 5-m-diameter personnel shaft. Their locations are determined by the hall excavation perimeter and by radiation safety considerations. Both shafts have stairwells and vent ducts. The personnel shaft also contains an elevator. A 5-m by 5-m object may be lowered down the equipment shaft. The collider utility bypass tunnel is provided to allow the passage of a loaded collider magnet transporter or any other traffic that must avoid the detector hall.

3.1.3.3 Assembly

The assembly of the BCD detector is outlined below. The assembly sequence is shown in Figures IR8-12 and IR8-13. With the exception of the muon steel, all components are assembled in the assembly hall. Magnet and muon steel is erected in place in the collision hall because of its large size and weight, approximately 12,000 tons.

Step 1: The muon steel is assembled in the collision hall using components brought in through the equipment shaft and transfer tunnels. Magnets 1 and 2 are assembled in the assembly hall. Magnet 2 is assembled directly in line with a transfer tunnel so that, upon completion, it can be more easily moved to the collision hall. Magnet 1 is not moved to the collision hall until step 4, and is, therefore, assembled at the end of the assembly hall so as not to obstruct the transfer tunnel during step 3.

Step 2: At the start of step 2, magnet 2 is moved from the assembly hall to its position in the collision hall through the in-line transfer tunnel. Assembly of the tracking chambers, TRDs, RICHs, and electromagnetic calorimetry is then started in the assembly hall. These components are positioned in the assembly hall to facilitate their scheduled transfer to the collision hall.

Step 3: All components in the assembly hall, with exception of magnet 1, are moved into the collision hall through the transfer tunnels in the order needed. In the

collision hall, the detector components are installed in their respective positions.

Step 4: Magnet 1 is moved into the collision hall and installed. The vertex detector is installed to complete detector assembly.

3.1.4 Medium Hall Version B

Version B of the medium halls consists of a single volume divided into a collision hall and an assembly hall where major detector components are assembled. The two areas can be separated by a 7-m-thick radiation shield door. The major axis of the version B medium hall is transverse to the collider beam line. This hall is sized to house the D0 Upgrade model detector. This hall with minor modification would also be suitable for the upgrades of other present collider detectors, such as CDF or UA1. The present D0 detector at Fermi National Accelerator Laboratory (FNAL) would be transported to the SSC Laboratory and upgraded, primarily by surrounding it with additional calorimetry and muon detectors. The total weight of the D0 Upgrade detector would be approximately 18,500 tons, and it would have on order of a quarter million channels of electronics. Construction of heavy steel pieces, such as hadron absorber steel, will take place in the collision hall. When the shielding door is closed, work on detector components in the assembly hall may take place while the collider is operating. The halls will be constructed so that the central components of the detector may be moved between collision and assembly halls.

3.1.4.1 Detector Description

The D0 Upgrade detector is a nonmagnetic general 4π detector designed primarily for detection of electrons, muons, jets, and missing transverse energy. Particular attention has been given to the design of good liquid argon and uranium-copper calorimetry without projective cracks. The original concept for an upgraded D0 was reported at the 1984 Snowmass SSC Summer Study. An exploded view of the D0 Upgrade detector is shown in Figure IR5-10. Plan and section views of the D0 Upgrade detector are shown in Figure IR5-11.

To improve the hadronic calorimetry, a coarse iron-sampling calorimeter section would be added behind the present liquid argon devices. This steel would be the first section of the muon momentum measuring system and would be magnetized. Interspersing 15 layers of chambers in the iron catcher section would give about 6-cm (one third absorption length) sampling.

A new muon toroid system would be added with the associated wire chambers for measurement of muon trajectories. The first meter of the magnetized steel would be in the above described catcher section of the calorimetry. There would be an addition of a central and two end iron toroids whose geometries would be extensions of the present D0 design. The muon iron is separated into 1-m-thick shells to give one or two intermediate measurements on muon trajectories in the central and end cap regions, respectively.

The present D0 liquid argon calorimeters are modeled with the assumption that they would be rebuilt to incorporate new, faster electronics for the SSC. They would be completely disassembled and reassembled at the SSC Laboratory. For the tracking chambers, there would be 20 layers of sense wires for the inner vertex chamber and 20 and 28 layers in the outer barrel and forward chambers, respectively. A new TRD, located between the inner and outer tracking devices, would also be required. The components and their dimensions of the D0 Upgrade detector are given in Table 5.

Table 5
Dimensions of the D0 Upgrade Detector

	Weight (t)	Inner Radius[a] (m)	Outer Radius[b] (m)	Length (m)	Z1[c] (m)	Z2[d] (m)
Inner vertex chamber		0.05	0.17	1.00		
Tracking		0.17	0.50	2.00		
Central drift chamber		0.50	0.75	2.70		
Forward drift chamber		0.07	0.40		1.15	1.40
Central LAr calorimeter	350	0.75	2.60	2.61		
End cap LAr calorimeters (2)	900	0.05	2.60		1.70	4.25
Central catcher calorimeter	1,300	3.00	4.10	7.30		
End cap catcher calorimeter	1,100	0.40	4.00		4.35	5.90
Central muon toroid	7,860	4.20	6.20	12.00		
End toroids	7,000	0.42	6.20		6.00	9.00
Muon chambers						
Total	18,510					

[a] Inner radius is the radial distance to the innermost part of the detector element.
[b] Outer radius is the radial distance to the outermost part of the element.
[c] Z1 is the distance from the IP along the beam to the nearest part of the element.
[d] Z2 is the distance from the IP along the beam to the farthest part of the element.

3.1.4.2 Hall Description

In our model, the version B medium hall is on the east campus at the southern experimental area on the outside leg of the diamond bypass. As noted above, the version B medium hall will have a collision hall and an assembly hall. This choice is made in our model with no east bypass so that detector construction may continue in the assembly hall while the collider is operating. The version B medium hall construction will be by open pit technique. Because of the length of the construction phase for the detector, the personnel and equipment shafts are located outside the excavation perimeter to give earliest access to the hall. Some surface facilities are not built directly over the hall to allow work on detector components to begin before completion of the hall construction.

Figure IR5-01 shows an isometric view, and Figure IR5-02 shows plan and section views of the version B hall. The cut-and-cover excavation for the medium hall version B is shown in Figure IR5-03, and the plan and section views are shown in Figure IR5-04. The width of the collision and assembly halls is determined largely by the length along the beamline of the D0 Upgrade detector. Adding to the overall width will be the space required to run hall and detector services. The length of the collision and assembly hall is determined by the width of the detector in the collision hall, the 7-m width of the shielding door and the length necessary to assemble the detector in the assembly hall portion of the single volume. The combined collision and assembly hall is 79 m long and 23 m wide. The collision hall transverse to the beamline measures 19 m. The IP is 10 m from the wall opposite the shielding door and is centered along the beamline. The floor in the combined collision and assembly hall has three levels such that the height to ceiling is 24.2 m in the collision hall, 20.2 m over the assembly pit in the assembly hall, and 18.2 m over the floor in the remainder of the assembly hall. The hall is equipped with

two overhead cranes on a single set of rails continuous over both the collision and assembly halls. The crane on the collision hall end of the rails is an 100/100-ton crane and the crane toward the assembly end of the hall is a 50/10 ton crane. The hook heights are 4 m less than the ceiling heights over the various areas given above. A 23-m by 12-m pit in the assembly hall next to the shielding door has a rail system that is capable of transporting the core detector (without muon steel and toroids) into the collision hall. A 7-m-thick shielding door separates the collision and assembly halls when the beam is stored. The door resides in an enclave when access is permitted. A 1-m-wide labyrinth around the shielding door allows passage when the door is closed. A shielding plug rides on the crane rails to seal the upper area of the hall.

There is a 9-m by 12-m construction shaft over the floor pit in the assembly hall. This shaft is primarily used to lower the central and end muon toroids components. During operation of the collider, the construction shaft is plugged with shielding blocks. There is a tunnel at the end of the assembly hall to a 9-m-diameter equipment shaft and also a tunnel to a 5-m-diameter personnel shaft. The shaft locations are determined by the hall excavation perimeter and by radiation safety considerations Both shafts have stairwells and vent ducts. The personnel shaft also contains an elevator. A 5-m by 5-m object may be lowered down the equipment shaft. The collider utility bypass tunnel is provided to allow the passage of a loaded collider magnet transporter or any other traffic that must avoid the detector hall.

3.1.4.3 Assembly

The assembly of the D0 Upgrade detector is outlined below. The assembly sequence is shown in Figure IR5-12. With the exception of the muon steel, all components are assembled in the assembly hall. The central and end muon toroids are erected in place in the collision hall because of their large size and weight, approximately 15,000 tons.

Step 1: The calorimeter shells are brought into the assembly hall through the equipment shaft. A temporary clean room for calorimetry is constructed in the assembly hall to protect the sensitive calorimeter elements from other activities in the hall. The calorimeter modules are installed in the shells. At the same time in the collision hall, the central muon toroid is constructed from components lowered down the construction shaft.

Step 2: The steel for the central and end cap catcher calorimeters is assembled in the pit area of the assembly hall from pieces lowered down the construction shaft. In the collision hall, the end muon toroids are constructed from components lowered down the construction shaft.

Step 3: The chambers are installed in the central and end cap catcher calorimeters. Muon chambers are installed and aligned in the central and two end toroids in the collision hall. Assembly of the liquid argon calorimeter in the clean room continues.

Step 4: The catcher nearest to the calorimeter clean room is moved to one side of the assembly hall. The completed liquid argon calorimeter is then rotated 90 degrees and moved into place inside the catcher calorimetry. The catcher calorimeter is closed and the entire calorimetry assembly is moved as a single unit into the muon toroids enclosure in the collision hall. The muon toroid doors are closed and assembly is complete. The three level design of the hall floor facilitates the insertion of the inner calorimetry components.

3.1.5 Small Halls

In our model, the small halls will be built at IR1 and IR4. These halls will be built entirely by cavern construction techniques. The construction sequence for the small halls is shown in Figures IR1S-01 and IR1S-02. They will provide space for experiments that are in the few thousand ton class or smaller. These experiments typically have a short lifetime, extending over a few years of collider operation or less. Some experiments carried out in these halls may require as little as a few weeks in the collision hall. These experiments can be very sophisticated, requiring the same data handling capability that the large and medium experiments require, but with much smaller capacity. A small hall will consist of a collision hall and an assembly hall. The assembly hall can be used for construction and operation of the installed experiment or as a staging area for a following experiment.

3.1.5.1 Examples

A wide variety of experiments can be conducted in the small halls. These may include gas jet experiments, particle survey and yield measurements, and exotic particle detection experiments, such as quark or monopole searches.

3.1.5.2 Hall Description

These halls are sufficiently small to be built by cavern construction techniques. The class of experiments to be performed in the small halls will weigh a few hundred tons or less. A 10-ton crane running the length of the hall should be sufficient. These halls could be aligned with the long dimension along the beam line and have no assembly hall, or be aligned with the long dimension transverse to the beam line and have assembly and collision halls. To have access to the assembly hall during operation of the collider, a 7-m shielding wall is needed. In this model, we chose the transverse hall as shown in Figures IR1-01 and IR1-02. This hall is 10 m along the beam, 45 m transverse to the beam, and 15 m to the crane hook.

There are two 5-m-diameter shafts giving access to the hall. The construction shaft opens directly into the assembly area. Large detector pieces are lowered through this shaft. A tunnel from the assembly area leads to the second shaft, which is used mainly for personnel access. It contains an elevator, stairwell, and vent ducts. The collider utility bypass tunnel is provided to allow the passage of a loaded collider magnet transporter or any other traffic that must avoid the detector hall.

3.1.5.3 Assembly

With an assembly hall, detectors can either be assembled on a movable cart and transported to the detector hall as a complete unit or they can be assembled in pieces and the pieces moved to the collision hall. Transfer from the assembly hall to the collision hall will take place during periods when the collider is not operating or operating in the other leg of the bypass. If there is no assembly hall, detectors can either be assembled on the surface and lowered into the collision hall as a unit, or they can be assembled in the collision hall from components assembled on the surface. In either case, assembly in the collision hall will take place when the collider is not operating or operating in the other leg of the bypass.

3.1.6 Test and Calibration Halls

Experience with the hadron colliders at FNAL and CERN and with the electron-positron collider LEP have indicated that the calibration needs of experiments at the SSC will be substantial.[10] The Laboratory will need about one high-quality calibration beam per experiment, starting as soon as possible consistent with the overall construction of the SSC Laboratory. The calibration beams that have been designed for the SSCL have a high flux capability and a large dynamic range. The beam optics are based on the wide band beam at FNAL.[11]

The primary use of the test beams will be to do system verification, study the systematics of detector components, verify performance, and to calibrate modules before they are installed in collision halls. The largest use is expected to be for calorimeters, however tracking chambers and special lepton identification devices are also expected to use substantial beam time. By the time extracted beams will exist at the SSC Laboratory, the initial round of experiments will have passed the prototype and development stage. Thus, the primary need will be for calibration, mapping, and system verification.

3.1.6.1 Calibration Beam Specification

The issues to be addressed in calibration beams are lepton identification, momentum measurement (both electron and muon), jet energy measurement, and resolution. Since leptons are generally considered a conspicuous signature of new physics, it is important to study their behavior over as wide a range of energy as possible. Jets are for the most part a collection of low-energy (1–50 GeV) hadrons with leading particles which can have up to the full jet energy. For true understanding of detectors, a wide dynamic range for the beam energy is essential. The type and energy of the particles in the beam have to be identified at least, as well as the device being studied is expected to identify type and energy. A list of specifications is given in Table 6.[12]

3.1.6.2 Secondary Beam Requirements

The secondary beams must deliver beam particles in accordance with the specifications given in Table 5.4.6-1. Perhaps the most stringent requirement is the need to deliver 1 GeV/c beams with fluxes of 100 Hz. It is very difficult to design a dynamic range of 1000 into a single beamline. The low energy requirement dictates the need to deliver 200 GeV/c beam from the MEB to a second target station with a shorter secondary beamline. Other driving factors in the specification are the need to achieve 10^7 particles at 100 GeV/c to study pileup issues, and 100 Hz of electrons at the highest possible energy.

To meet these specifications a design based on the wide-band photon beam at FNAL has been chosen. This beam has excellent electron yields and can also deliver large hadron fluxes.

Table 6
Specifications for SSC Test/Calibration Beams

Lepton ID studies	
Beams to highest possible energy at	100 Hz of e, μ, π
Particle ID	1000:1
Energy resolution	absolute 0.3% relative 0.05%
Hadron response studies	
Beams	1–100 GeV
Flux up to (infrequently and at selected energies)	10^7 per second
Particle ID	100:1
Muon flux at detector hall	<150 k Hz/m^2 2 TeV @ 10^7/sec

The way in which the requirements for high energy are integrated with the low energy is discussed below. The high energy beam extends over the full 500 m length of the beam line and consists mainly of four bends that form back-to-back doglegs. The requirements for low energy beam will be generated from 200 GeV/c protons transmitted to a secondary target 200 m upstream of the test station. The shorter beam line is required to reduce the decay of the low energy pions that would occur in the longer beam line. The expected yields for both the high and low energy beams are given in Table 7.[13]

Table 7
Particle Yields for High and Lower Energy Beams

Primary Energy (GeV/c)	Secondary Momentum (GeV/c)	π^- per proton	e (sweep) per proton	e (natural) per proton
2000	1500	5×10^{-6}	1×10^{-8}	
2000	500	3×10^{-3}	3×10^{-4}	
2000	100	8×10^{-4}	1×10^{-3}	
2000	50	2×10^{-4}	1×10^{-3}	
200	50	2×10^{-5}	4×10^{-6}	
200	10	5×10^{-6}		30% (est)
200	2	7×10^{-8}		40% (est)
200	1	2×10^{-9}		50% (est)

3.1.6.3 Hall Description

The design of the calibration hall is fixed by the specification of the test beams, the calibration needs of our model experiments, and the requirement that the work in each beam line be independent of its neighbors. Radiation studies using the program CASIM indicate that outside a full width of 25 m, the exposure levels will be less than 10 millirem per year

for a primary flux of 10^{18} incident 2-TeV protons. This exposure is largely due to the muon fluxes. Beam separations of 25 m will allow personnel access in one beam line while the neighboring line is operating. If additional shielding is necessary, it can be provided by stackable shielding blocks. Since calibration requires frequent access to detector modules, independent beam operation is essential for efficient operation of the entire calibration program. The length of the hall must be sufficient to include test stands for all major components. For calorimeters, the stands and fixtures must have the correct geometric relationships to study the transition regions between detector elements.

The calibration hall with three beam lines and two examples of detector test and calibration arrangements (the LSD and BCD detectors) are shown in Figures CH-01, CH-02, and CH-03.[14] The support stands for each of these modules allows modules to be placed in orientations so that the beam can simulate all possible particle trajectories. These stands also move either below or beside the beam so that downstream modules can be calibrated without interference. In some cases, the stand will have sufficient motion to allow the module to be outside a radiation fence so there can be access to the module during low intensity operation of the beam. As needed, there may be electronics trailers, gas handling equipment, and other support services on the floor of the assembly hall.

Independent operation and control of each beam line is provided by surface buildings at the upstream end of the calibration hall. These buildings contain control rooms, electronics rooms, computer rooms, offices, and light mechanical and electronics shops.

3.1.6.4 Operations

Equipment to be used in the calibration hall is brought to a truck unloading dock on the surface at the downstream end of the hall. If equipment is sufficiently light and easy to handle, it could be brought to the floor of the hall in a freight/personnel elevator; otherwise, it would be conveyed to a transfer cart on the floor of the hall by a bridge crane in the truck unloading area. The transfer cart could then be moved to the proper bay and put in its proper position along the beam line. The transfer cart runs along rails behind beam stops.

User controls for particular beams are in the counting room associated with that beam. Beam-off operations include installing new modules, cabling and testing of installed modules, and installation, replacement, or reorganization of support equipment. Beam-on operation can be either low or high intensity mode. During low intensity mode, access to modules or support equipment outside a radiation fence is possible. During high intensity mode, all operation, of the equipment in the beam will have to be remote.

It is expected that in some cases a large number of modules will be in the beam each for a short period. In other cases, one representative module will undergo extensive testing in the beam over a long period of time. Generally, calorimeters in which the gain is in the calorimeter, such as scintillator or gas calorimeters, will be in the former category. Calorimeters where the gain is in the electronics, such as liquid argon calorimeters, will be in the latter category. The example for the LSD detector shown in Figures CH-01,-02, and -03 is the Martin-Marietta model of a liquid argon calorimeter.[15] The largest single piece, three central barrel calorimeter modules in a support container, weighs 44 tons.

3.1.6.5 Functional Description

Independent operation and services are provided for each beam line to allow efficient calibration of detector components. Each beam line has its own crane, a 50-ton crane in the central bay and in the truck unloading dock, and a 20-ton crane in each of the outer bays. There will be no walls between neighboring bays. The space between bays is deemed

sufficient for radiation safety. If additional shielding is necessary, it can be provided with stackable shielding. Beam controls and instrumentation readout are in the counting rooms associated with each beam line. Each beam line will have radiation monitoring and safety equipment. Work areas for personnel associated with each beam line is provided in buildings on the surface at the upstream end of the calibration hall.

A power substation and any support systems such as gas handling or cryogenic systems that may be necessary are on the surface downstream and beside the calibration hall. Additional support systems, such as dewars, storage tanks, or electronic rooms, may be necessary on the floor of the calibration hall.

4.1 References

[1]*Proceedings of the 1984 Summer Study on the Design and Utilization of the Superconducting Super Collider,* Snowmass, Colorado; R. Donaldson and J. Morfin, eds., 1984; *Proceedings of the 1986 Summer Study on the Physics of the Superconducting Super Collider,* Snowmass, Colorado; R. Donaldson and J. Marx, eds. (1986); *Proceedings of the Workshop on Experiments, Detectors and Experimental Areas for the Supercollider,* R. Donaldson and M. Gilchriese, eds., World Scientific (1987); *Proceedings of the 1988 Summer Study on High Energy Physics in the 1990s,* Snowmass, Colorado, S. Jousen, ed., (1988); *Cost Estimate of Initial SSC Experimental Equipment,* SSC Central Design Group Report No. SSC-SR-1023 (May 1986).

[2]*Site-Specific Study of SSC Support Facilities for Four Generic Detector Designs.* Michael Marx, Scientific Coordinator. Issued by RTK, 1800 Harrison Street, Oakland, California 95623.

[3]Footnote 1, op. cit.

[4]Proceedings of the 1984, 1986, and 1988 Summer Studies, op cit.

[5]Proceedings of the 1987 Workshop, op cit.

[6]Proceedings of the 1987 Workshop, op cit.

[7]Harris and Herve, "L* at the SSC," SSC Laboratory Report No. SSC-N-674 (September 1989).

[8]ibid.

[9]Proceedings of the 1988 Summer Study, op cit.

[10]J. Cooper, "Test Beam Requirements at the SSC," in *Proceedings of the 1984 Summer Study on the Design and Utilization of the Superconducting Super Collider,* R. Donaldson and J. Morfin, eds., Snowmass, Colorado (1984).

[11]Joel Butler, et al. Fermilab Note TM963 "Design for a New Wide Band Neutral Beam for the Tevatron," April 1980, Update April 25, 1989.

[12]A. Autin, et al., "Calibration Beams at the SSC," SSC Central Design Group Report No. SSC-230 (August, 1989).

[13]ibid.

[14]ibid.

[15]T. Adams, et al., "Status Report on an Engineering Study of Hermetic Liquid Argon Calorimetry for the SSC," presented at the Workshop on Calorimetry for the SSC, Tuscaloosa (March 1989).

SITE-SPECIFIC CONCEPTUAL STUDY
EXPERIMENTAL HALLS AND DETECTORS DRAWING LIST

DWG NO.	REV	DATE	TITLE
** LOCATION: IR - GENERAL DRAWINGS			
G-01	1	12/05/89	KEYPLAN
G-02	1	12/05/89	EXPERIMENTAL HALL PROFILES
G-03	1	12/05/89	EXCAVATION LIMITS
** LOCATION: IR1 - SMALL HALL (N)			
IR1-01	1	12/05/89	FINISHED HALL, ISOMETRIC
IR1-02	1	12/05/89	FINISHED HALL, PLAN AND SECTIONS
** LOCATION: IR1S - CAVERN CONSTRUCTION SEQUENCES			
IR1S-01	0	12/05/89	CAVERN CONSTRUCTION, STEPS 1 THROUGH 4
IR1S-02	0	12/05/89	CAVERN CONSTRUCTION, STEPS 5 THROUGH 8
** LOCATION: IR2 - LSD			
IR2-01	1	12/05/89	FINISHED HALL, ISOMETRIC
IR2-02	1	12/05/89	FINISHED HALL, PLAN AND SECTIONS
IR2-03	0	12/05/89	CUT-AND-COVER CONSTRUCTION, ISOMETRIC
IR2-04	0	12/05/89	CUT-AND-COVER CONSTRUCTION, PLAN AND SECTIONS
IR2-10	1	12/05/89	DETECTOR, EXPLODED ISOMETRIC
IR2-11	1	12/05/89	DETECTOR, PLAN AND SECTIONS
IR2-12	1	12/05/89	DETECTOR ASSEMBLY, STEPS 1 AND 2
IR2-13	1	12/05/89	DETECTOR ASSEMBLY, STEPS 3 AND 4
** LOCATION: IR2A - NON-MAGNETIC DETECTOR			
IR2A-01	1	12/05/89	FINISHED HALL, ISOMETRIC
IR2A-02	1	12/05/89	FINISHED HALL, PLAN AND SECTIONS
IR2A-10	1	12/05/89	DETECTOR EXPLODED ISOMETRIC
IR2A-11	1	12/05/89	DETECTOR, PLAN AND SECTIONS
IR2A-12	1	12/05/89	DETECTOR ASSEMBLY, STEPS 1 AND 2
IR2A-13	1	12/05/89	DETECTOR ASSEMBLY, STEPS 3 AND 4
** LOCATION: IR2S - CUT-AND-COVER CONSTRUCT. SEQUENCE			
IR2S-01	0	12/05/89	CUT-AND-COVER CONSTRUCTION, STEPS 1-4
IR2S-02	0	12/05/89	CUT-AND-COVER CONSTRUCTION, STEPS 5 THROUGH 8
** LOCATION: IR3 - L* DETECTOR			
IR3-01	1	12/05/89	FINISHED HALL, ISOMETRIC
IR3-02	1	12/05/89	FINISHED HALL, PLAN AND SECTIONS
IR3-03	0	12/05/89	CUT-AND-COVER CONSTRUCTION, ISOMETRIC
IR3-04	0	12/05/89	CUT-AND-COVER CONSTRUCTION, PLAN AND SECTIONS
IR3-10	1	12/05/89	DETECTOR, EXPLODED ISOMETRIC
IR3-11	1	12/05/89	DETECTOR, PLAN AND SECTIONS
IR3-12	1	12/05/89	DETECTOR ASSEMBLY, STEPS 1 AND 2
IR3-13	1	12/05/89	DETECTOR ASSEMBLY, STEPS 3 AND 4
** LOCATION: IR5 - D0 UPGRADE			
IR5-01	1	12/05/89	FINISHED HALL, ISOMETRIC
IR5-02	1	12/05/89	FINISHED HALL, PLAN AND SECTIONS
IR5-03	0	12/05/89	CUT-AND-COVER CONSTRUCTION, ISOMETRIC

SITE-SPECIFIC CONCEPTUAL STUDY
EXPERIMENTAL HALLS AND DETECTORS DRAWING LIST

DWG NO.	REV	DATE	TITLE
IR5-04	0	12/05/89	CUT-AND-COVER CONSTRUCTION, PLAN AND SECTIONS
IR5-10	1	12/05/89	DETECTOR, EXPLODED ISOMETRIC
IR5-11	1	12/05/89	DETECTOR, PLAN AND SECTIONS
IR5-12	1	12/05/89	DETECTOR ASSEMBLY, STEPS 1 THROUGH 4
** LOCATION: IR8 - BCD			
IR8-01	1	12/05/89	FINISHED HALL, ISOMETRIC
IR8-02	1	12/05/89	FINISHED HALL, PLAN AND SECTIONS
IR8-03	0	12/05/89	CUT-AND-COVER CONSTRUCTION, ISOMETRIC
IR8-04	0	12/05/89	CUT-AND-COVER CONSTRUCTION, PLAN AND SECTIONS
IR8-10	1	12/05/89	DETECTOR, EXPLODED ISOMETRIC
IR8-12	1	12/05/89	DETECTOR ASSEMBLY, STEPS 1 AND 2
IR8-13	1	12/05/89	DETECTOR ASSEMBLY, STEPS 3 AND 4
** LOCATION: THE CALIBRATION HALL			
CH-01	1	12/05/89	FINISHED HALL, ISOMETRIC
CH-02	1	12/05/89	FINISHED HALL, PLAN AND SECTIONS
CH-03	1	12/05/89	LSD & BCD CALIBRATION BEAM LINES, PLAN AND ELEV.

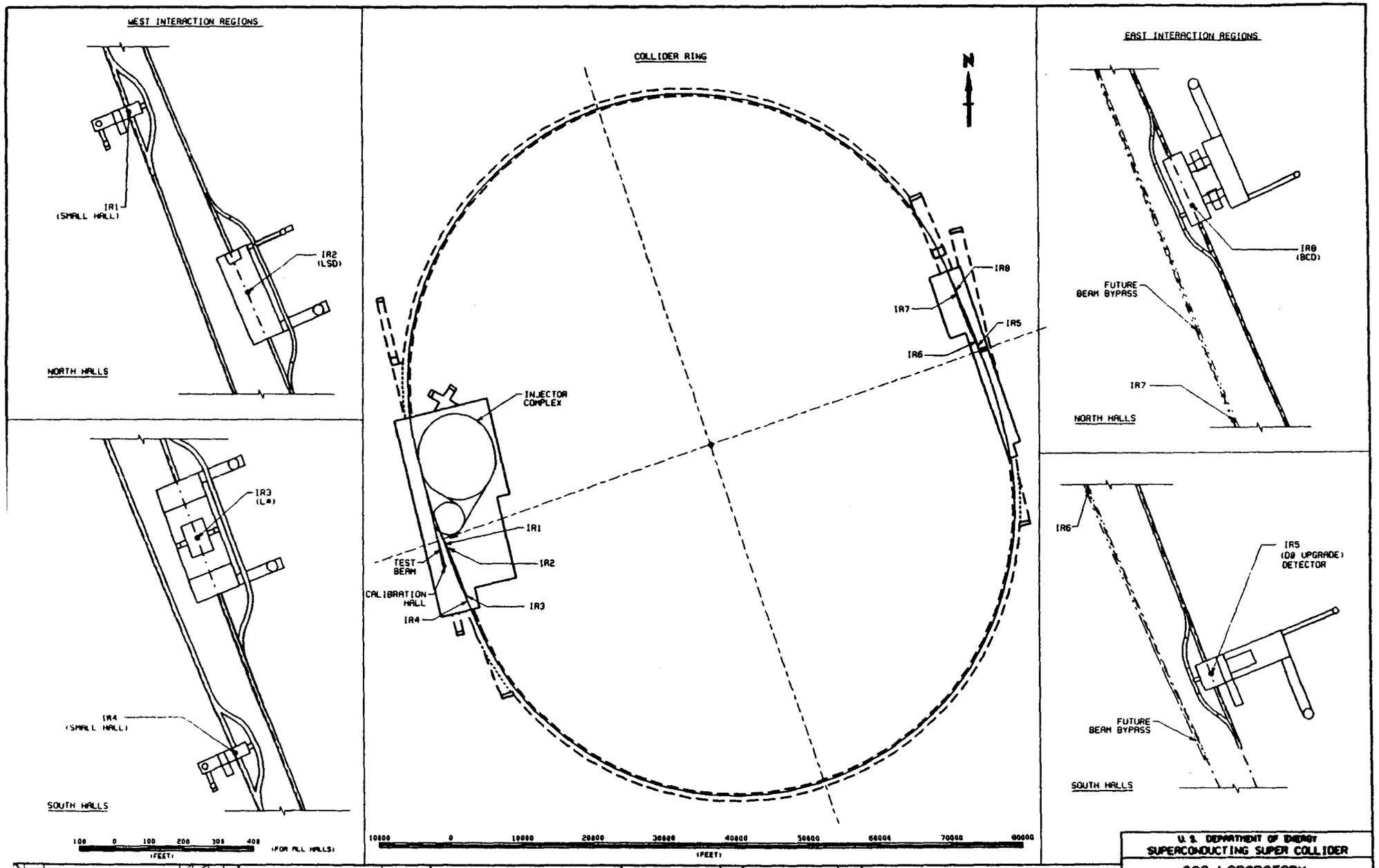

U. S. DEPARTMENT OF ENERGY
SUPERCONDUCTING SUPER COLLIDER

SSC LABORATORY

INTERACTION REGIONS

KEY PLAN

DRAWING G-01 | DATE | REV DATE 12/5/88 | SHEET

ID	DATE	REVISION	BY	APP	REFERENCE DRAWINGS	NUMBER	NOTES

APPROVAL	DATE	SCALE AS SHOWN	DATE
		DRAWN A. NUNEZ/M. DAVIS	
		CHECKED	
		ENGINEER	
		PROJECT	

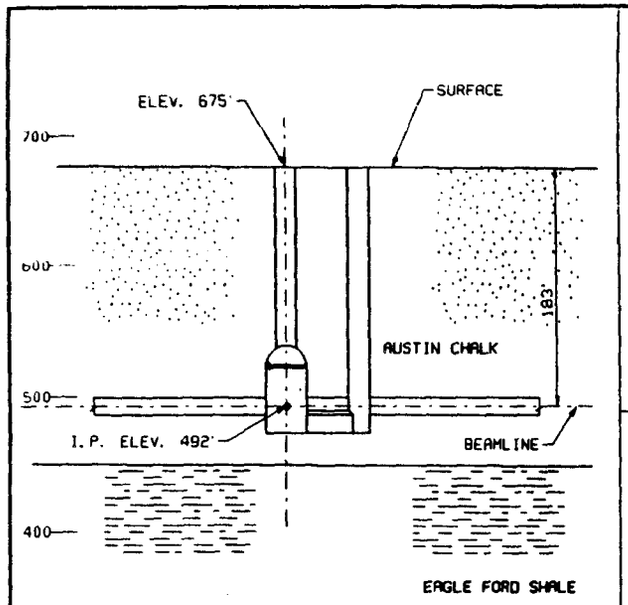

IR1 - SMALL HALL (NORTH)

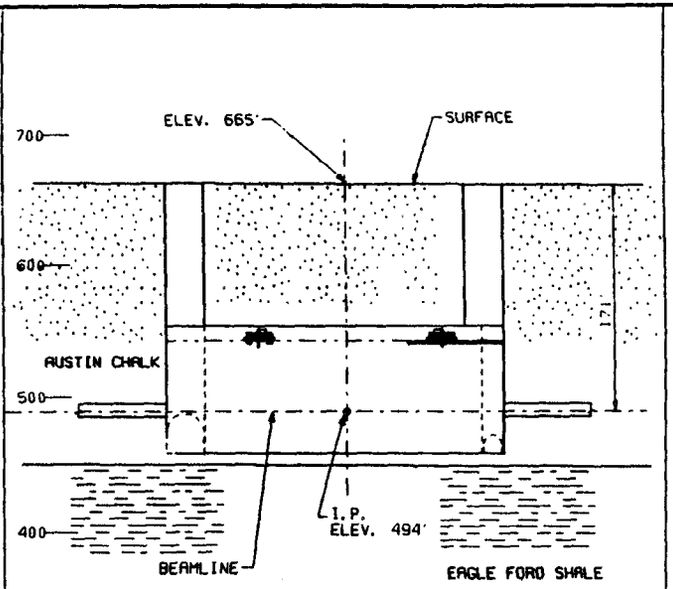

IR2 - LSD/NMD

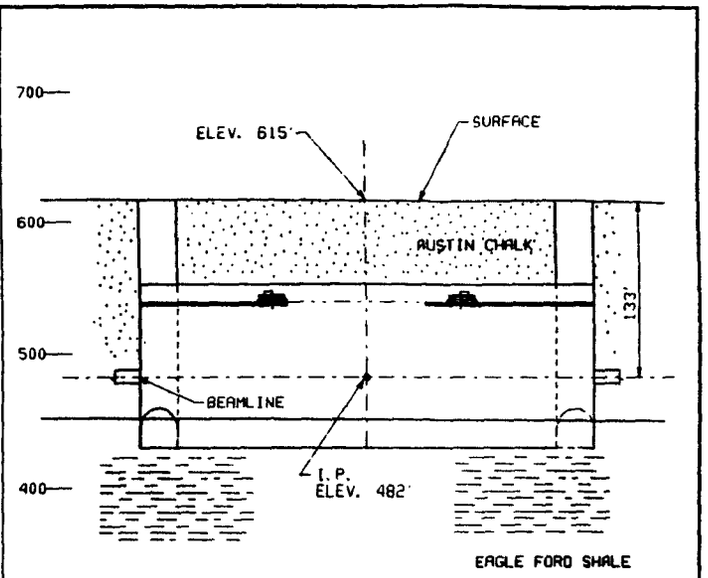

IR3 - L*

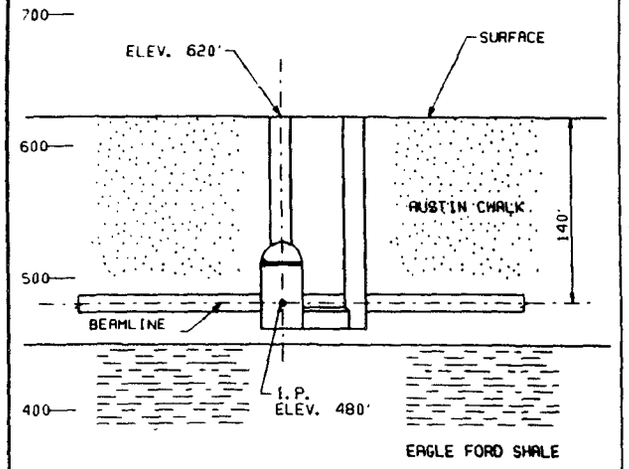

IR4 - SMALL HALL (SOUTH)

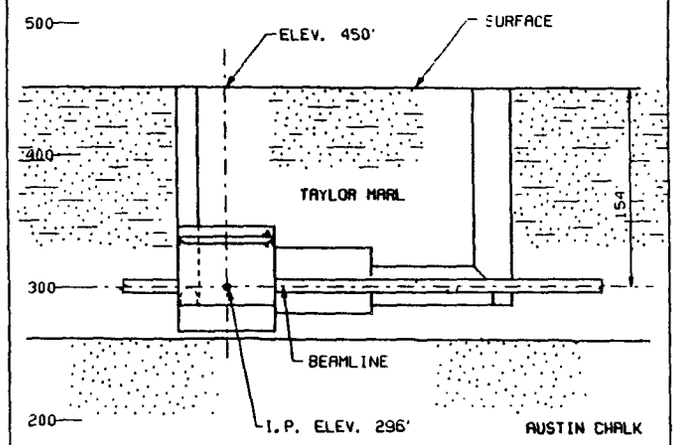

IR5 - DO UPGRADE DETECTOR

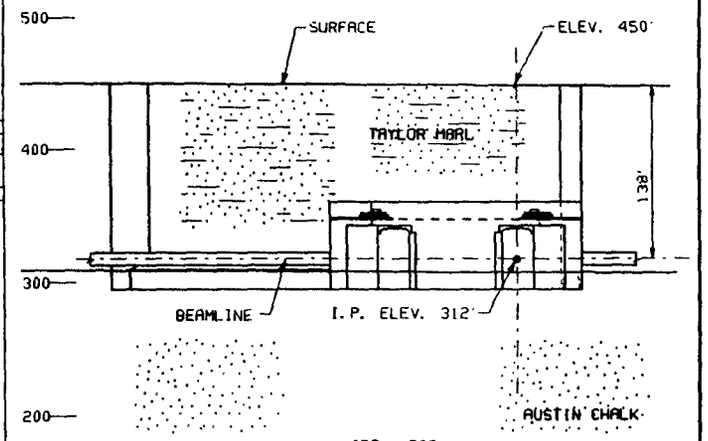

IR8 - BCD

40 0 40 80 120 160 200 240 280 320
(FEET)

1. ELEVATION DATA BASED ON GEOLOGICAL PROFILE DWG. TP-19 DATED 9/25/89 AND FIELD WORK

NO. | DATE | REVISION | APP | APP | REFERENCE DRAWINGS | NUMBER

NOTES

APPROVAL | DATE | SCALE NO SHOWN | DATE

U.S. DEPARTMENT OF ENERGY
SUPERCONDUCTING SUPER COLLIDER

SSC LABORATORY

EXPERIMENTAL HALL

PROFILES

DRAWING G-02 | DATE | REV DATE 12/5/89 | SHEET

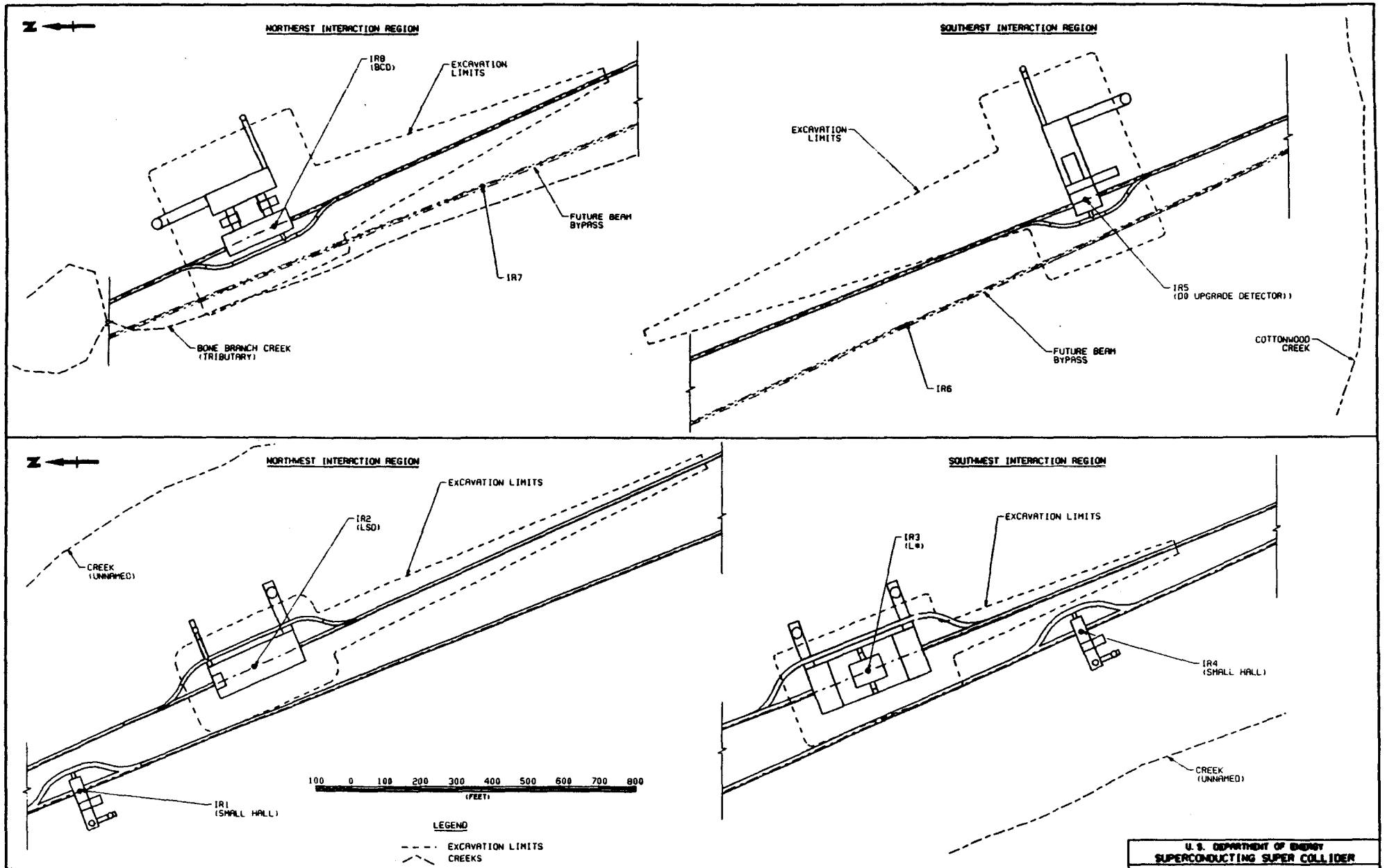
N
NORTHEAST INTERACTION REGION
IR8
(BCD)
EXCAVATION
LIMITS
FUTURE BEAM
BYPASS
IR7
BONE BRANCH CREEK
(TRIBUTARY)
SOUTHEAST INTERACTION REGION
EXCAVATION
LIMITS
IR5
(D0 UPGRADE DETECTOR))
FUTURE BEAM
BYPASS
IR6
COTTONWOOD
CREEK
N
NORTHWEST INTERACTION REGION
EXCAVATION LIMITS
IR2
(LSD)
CREEK
(UNNAMED)
IR1
(SMALL HALL)
100 0 100 200 300 400 500 600 700 800
(FEET)
SOUTHWEST INTERACTION REGION
EXCAVATION LIMITS
IR3
IR4
(SMALL HALL)
CREEK
(UNNAMED)
LEGEND
EXCAVATION LIMITS
CREEKS
U. S. DEPARTMENT OF ENERGY
SUPERCONDUCTING SUPER COLLIDER
SSC LABORATORY
INTERACTION REGIONS
EXCAVATION LIMITS
DRAWING G-03
DATE
12/5/89
SHEET

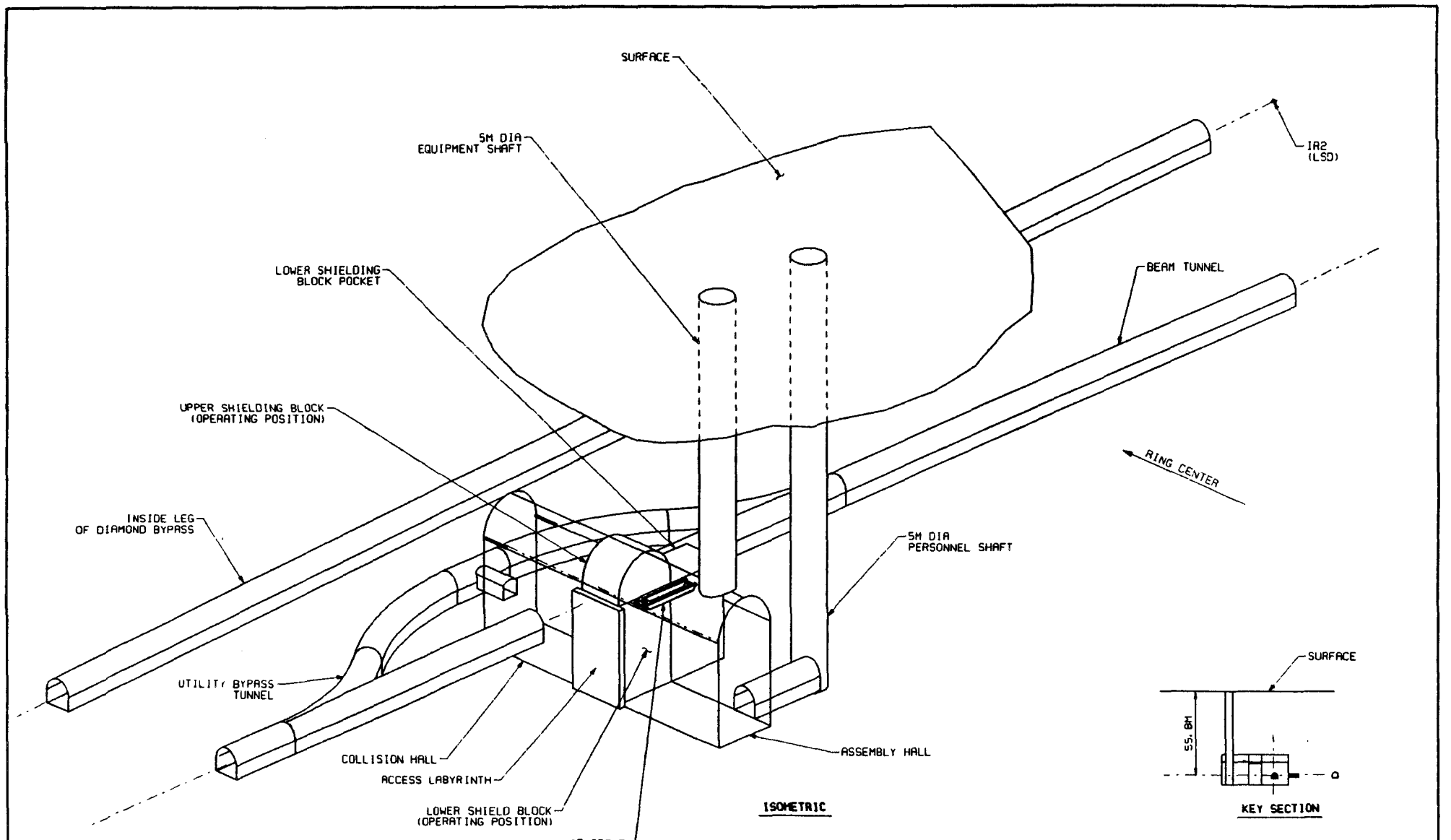

NO	DATE	REVISION	BY	APP	APP	REFERENCE DRAWINGS	NUMBER	NOTES

APPROVAL	DATE	SCALE NONE	DATE
		C. LAUGHTON	
		R. NUNEZ	

U.S. DEPARTMENT OF ENERGY
SUPERCONDUCTING SUPER COLLIDER

SSC LABORATORY

IR1- SMALL HALL (NORTH)
FINISHED HALL
ISOMETRIC

DRAWING IR1-01 | DATE | REV DATE 12/5/88 | SHEET

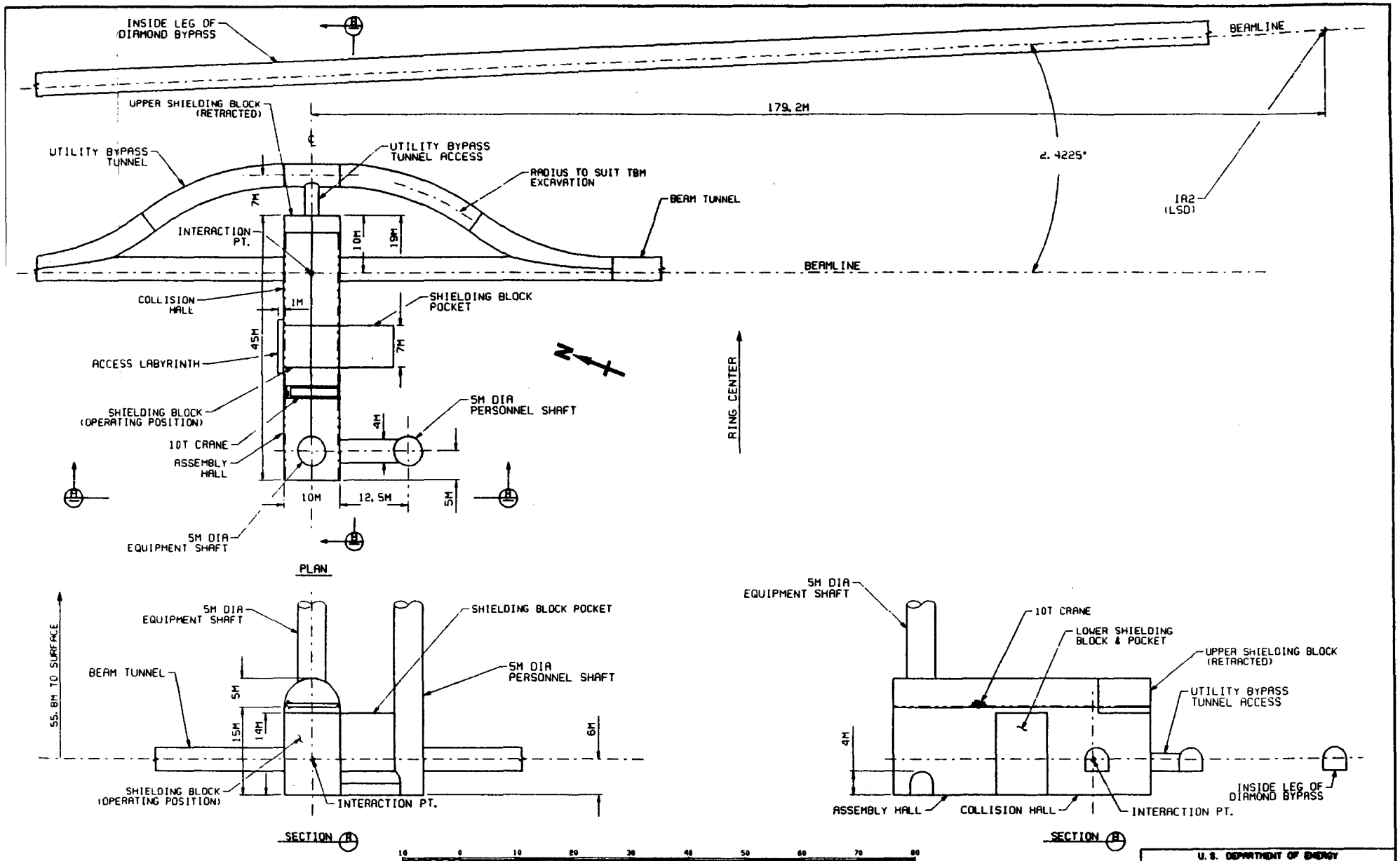
INSIDE LEG OF DIAMOND BYPASS
BEAMLINE
179.2M
2.4225°
IR2 (LSD)
UPPER SHIELDING BLOCK (RETRACTED)
UTILITY BYPASS TUNNEL
UTILITY BYPASS TUNNEL ACCESS
RADIUS TO SUIT TBM EXCAVATION
BEAM TUNNEL
INTERACTION PT.
7M
10M
19M
BEAMLINE
COLLISION HALL
1M
SHIELDING BLOCK POCKET
45M
7M
ACCESS LABYRINTH
SHIELDING BLOCK (OPERATING POSITION)
5M DIA PERSONNEL SHAFT
4M
10T CRANE
ASSEMBLY HALL
10M
12.5M
5M
5M DIA EQUIPMENT SHAFT
RING CENTER
PLAN
5M DIA EQUIPMENT SHAFT
SHIELDING BLOCK POCKET
55.8M TO SURFACE
BEAM TUNNEL
5M DIA PERSONNEL SHAFT
5M
15M
14M
6M
SHIELDING BLOCK (OPERATING POSITION)
INTERACTION PT.
SECTION A
5M DIA EQUIPMENT SHAFT
10T CRANE
LOWER SHIELDING BLOCK & POCKET
UPPER SHIELDING BLOCK (RETRACTED)
UTILITY BYPASS TUNNEL ACCESS
4M
INSIDE LEG OF DIAMOND BYPASS
ASSEMBLY HALL
COLLISION HALL
INTERACTION PT.
SECTION A
10 0 10 20 30 40 50 60 70 80
(METERS)
U.S. DEPARTMENT OF ENERGY
SUPERCONDUCTING SUPER COLLIDER
SSC LABORATORY
IR1 - SMALL HALL (NORTH)
FINISHED HALL
PLAN AND SECTIONS
DRAWING IR1-02
DATE
SHEET

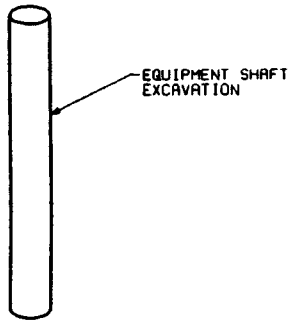

EQUIPMENT SHAFT EXCAVATION

- EXCAVATION OF THE EQUIPMENT SHAFT TO COLLISION HALL ROOF LEVEL
- ENLARGEMENT AND REINFORCEMENT OF THE SHAFT/CAVERN INTERSECTION ZONE

STEP 1

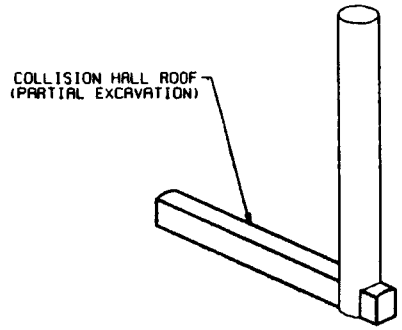

EXCAVATION OF THE CENTRAL CROWN DRIFT

- EXCAVATION BY ROADHEADER OF THE CENTRAL ROOF DRIFT
- TEMPORARY ROCK SUPPORT

STEP 2

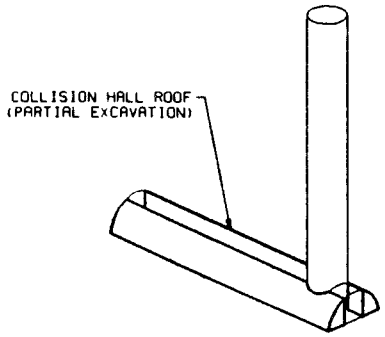

EXCAVATION OF THE COLISION HALL ROOF

- EXCAVATION BY ROADHEADER OF THE COLLISION HALL ROOF
- TEMPORARY ROCK SUPPORT

STEP 3

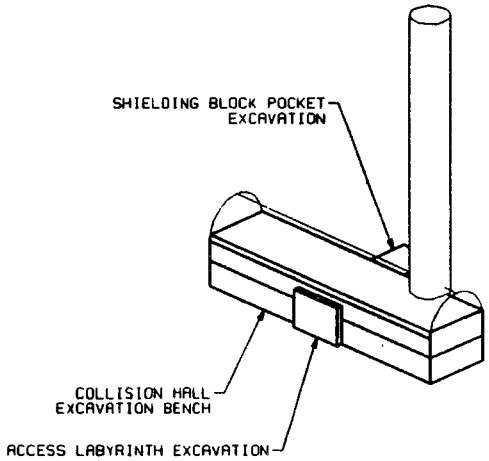

EXCAVATION OF THE HALL BENCHES

- MECHANICAL EXCAVATION OF THE UPPER HALL BENCHES (RIPPER/ROADHEADER)
- TEMPORARY ROCK SUPPORT

STEP 4

NO	DATE	REVISION		APP	APP	REFERENCE DRAWINGS	NUMBER

1. HEAVY LINE WEIGHT INDICATES CURRENT ACTIVITY

NOTES

APPROVAL	DATE	SCALE: NO SCALE	DATE
		DRAWN: C. LAUGHTON	
		CHKD: R. NUNEZ	
		ENGINEER	
		PROJ. ENGINEER	
		PROJ. MANAGER	

U.S. DEPARTMENT OF ENERGY
SUPERCONDUCTING SUPER COLLIDER

SSC LABORATORY

IR1 - SMALL HALL
CAVERN CONSTRUCTION
STEPS 1-4

DRAWING IR1S-01 | DATE | REV 0 DATE 12/5/90 | SHEET

Z61: (16A, 31)R16029.DGN 8 NUNEZ 07-DEC-1990 23:01

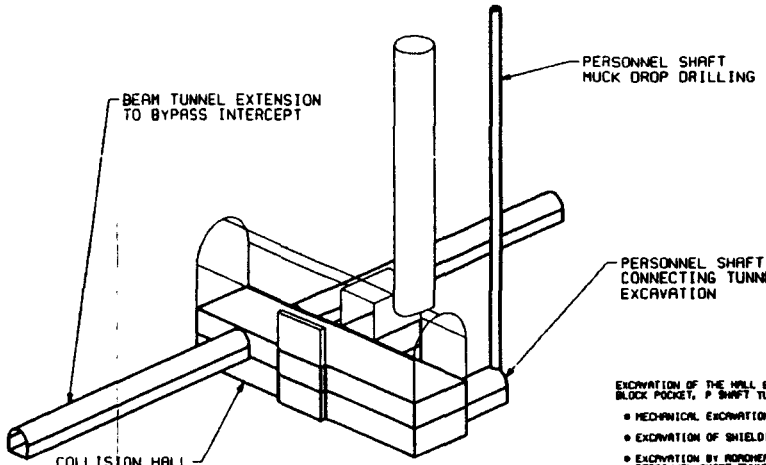

STEP 5

EXCAVATION OF THE HALL BENCHES, SHIELDING BLOCK POCKET, P SHAFT TUNNEL

- MECHANICAL EXCAVATION OF THE HALL BENCHES
- EXCAVATION OF SHIELDING BLOCK POCKET
- EXCAVATION BY ROADHEADER OF THE PERSONNEL SHAFT TUNNEL
- DRILLING OUT OF THE PERSONNEL SHAFT MUCK DROP
- EXCAVATION BY ROADHEADER OF THE BEAM TUNNEL

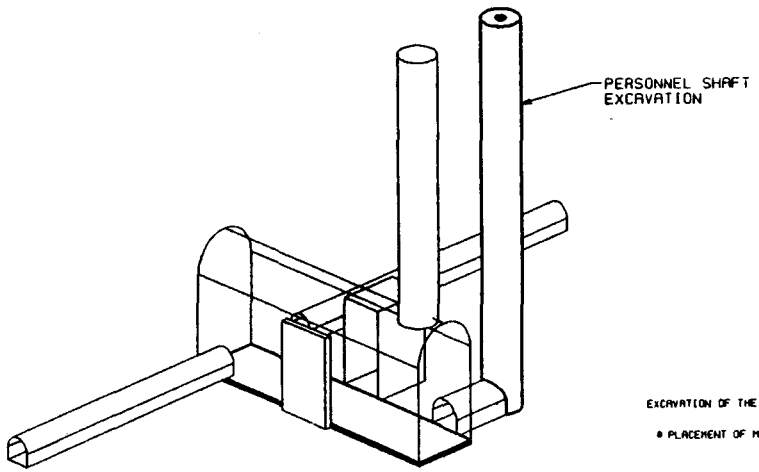

STEP 6

EXCAVATION OF THE PERSONNEL SHAFT

- PLACEMENT OF MAIN FLOOR SLAB

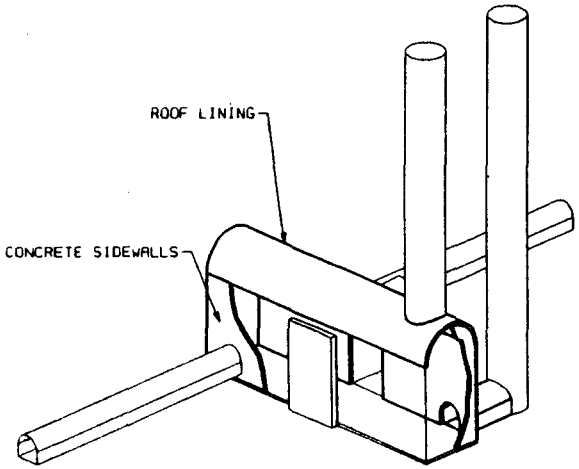

STEP 7

FINAL HALL CONCRETE LINING

- WALL LININGS
- PLACEMENT OF ROOF LINING

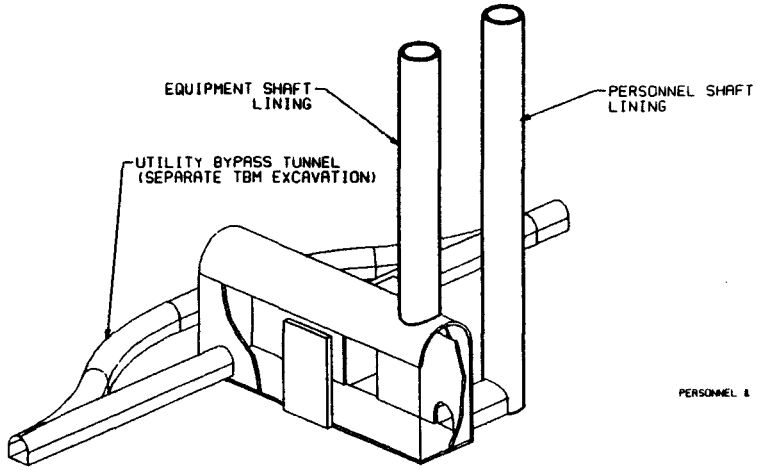

STEP 8

PERSONNEL & EQUIPMENT SHAFT LINING

NO.	DATE	REVISION	BY	APP	APP	REFERENCE DRAWINGS	NUMBER

1. HEAVY LINE WEIGHT INDICATES CURRENT ACTIVITY

NOTES

APPROVAL	DATE	SCALE NO SCALE	DATE
		DRAWN C. LAUGHTON	
		CHECKED R. MAREZ	

U.S. DEPARTMENT OF ENERGY
SUPERCONDUCTING SUPER COLLIDER

SSC LABORATORY

IR1 - SMALL HALL
CAVERN CONSTRUCTION
STEPS 5-8

DRAWING IR1S-02 | DATE | REV 0 DATE 12/5/89 | SHEET

Z61: (102, 31)R16A24C.DGN 1 MAREZ 90-DEC-1900 17:20

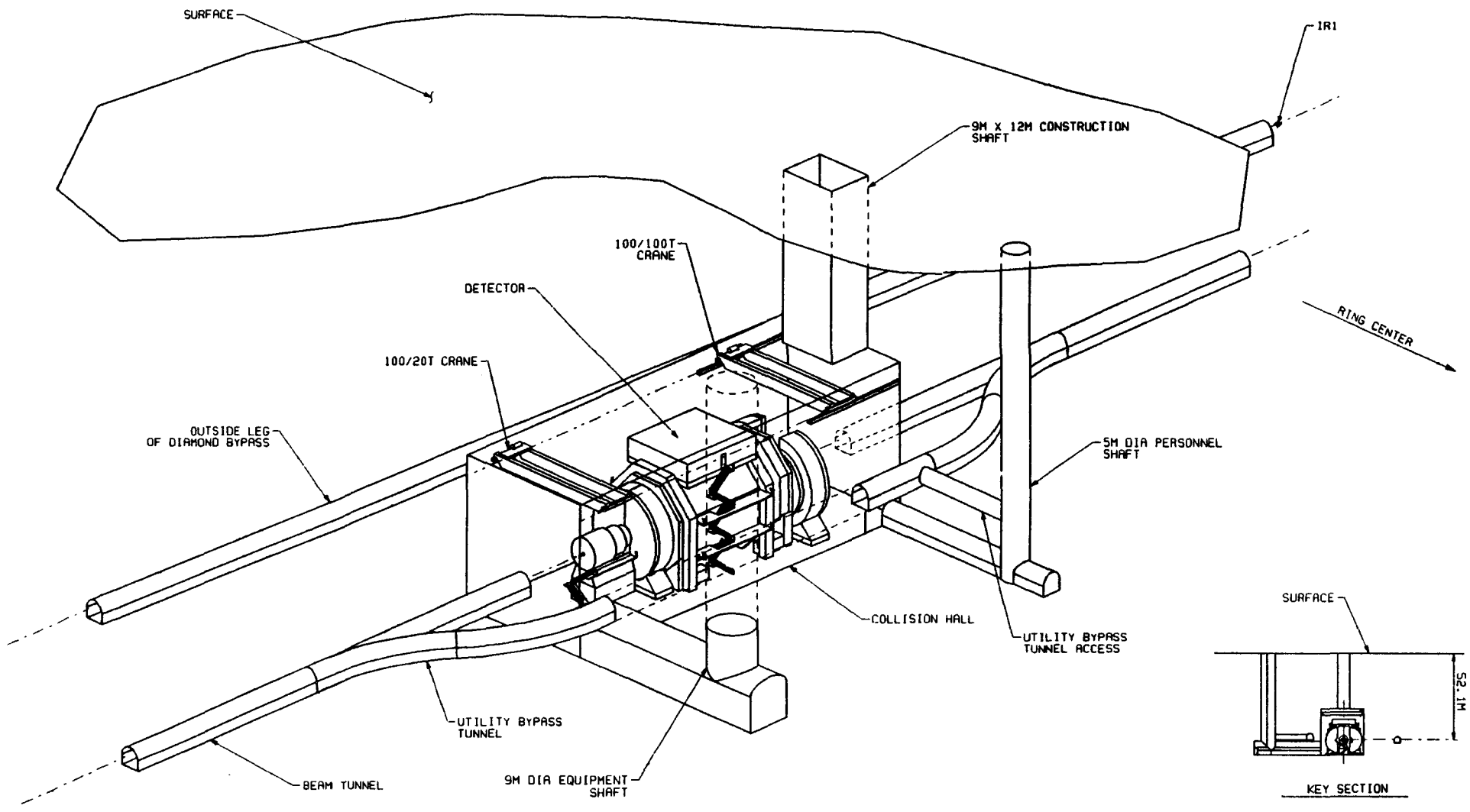

ISOMETRIC

KEY SECTION

NO	DATE	REVISION	APP	APP	REFERENCE DRAWINGS	NUMBER	NOTES

APPROVAL	DATE	SCALE	NONE	DATE
DRAWN				
CHK				
ENGRG				
CHK				
ENGRG				
CHK				

U. S. DEPARTMENT OF ENERGY
SUPERCONDUCTING SUPER COLLIDER

SSC LABORATORY

IR2 - LARGE SOLENOID DETECTOR
FINISHED HALL
ISOMETRIC

DRAWING IR2-01 | DATE | REV 1 DATE 12/5/89 | SHEET

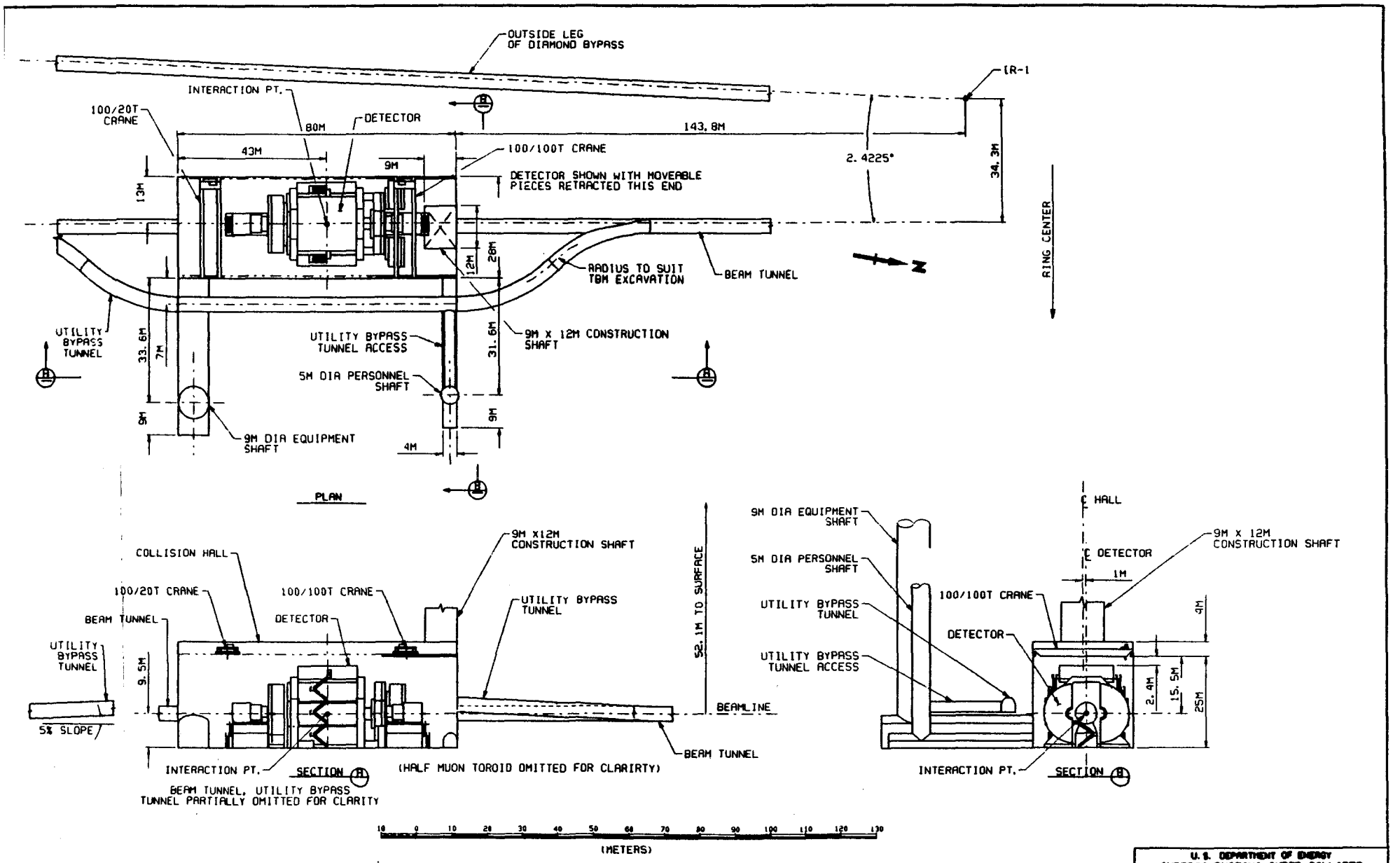

U. S. DEPARTMENT OF ENERGY
SUPERCONDUCTING SUPER COLLIDER

SSC LABORATORY

IR2 - LARGE SOLENOID DETECTOR
FINISHED HALL
PLAN AND SECTIONS

DRAWING IR2-02 | DATE | REV | DATE 12/5/89 | SHEET

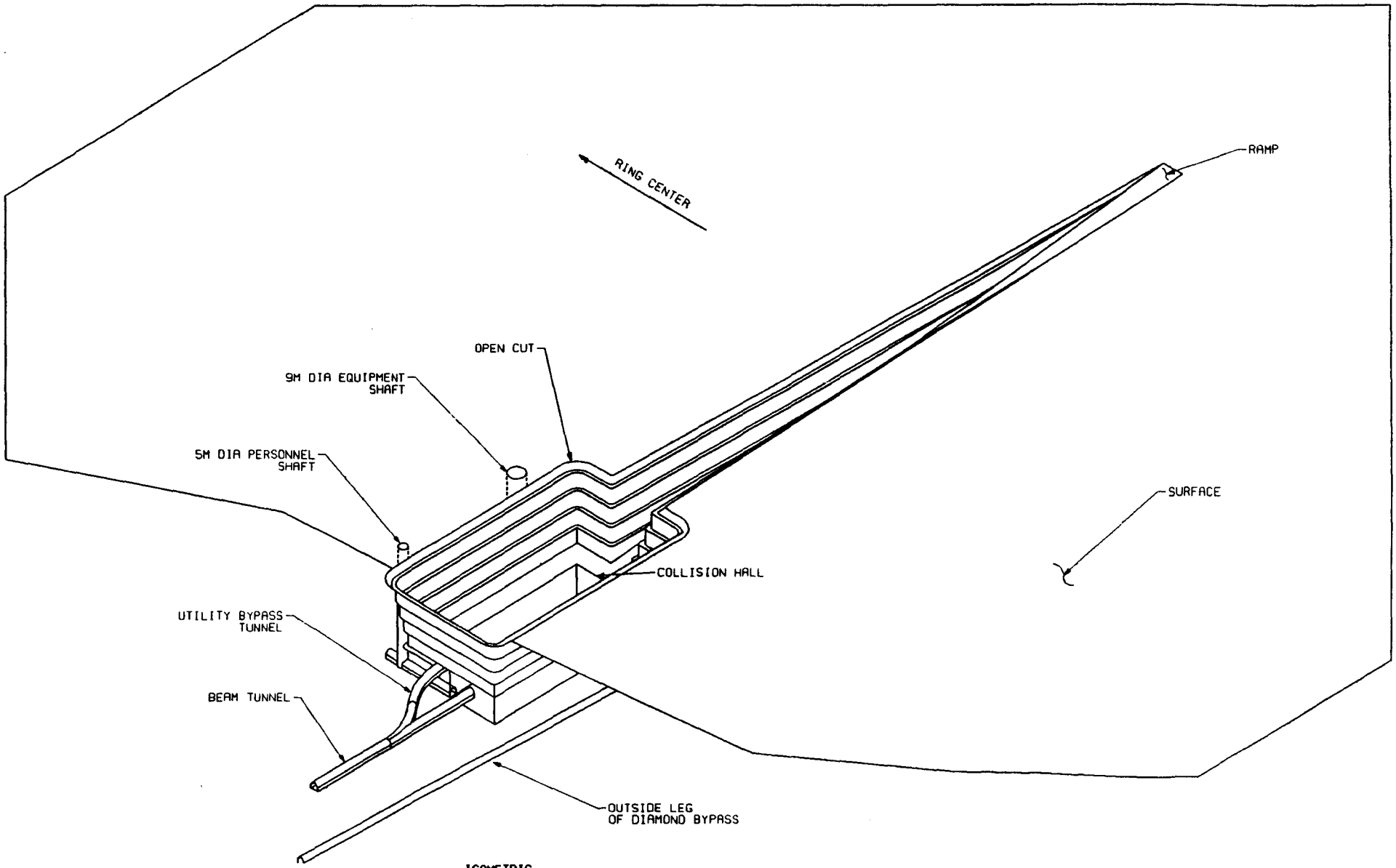

ISOMETRIC

NO	DATE	REVISION	BY	APP	APP	REFERENCE DRAWINGS	NUMBER	NOTES

APPROVAL	DATE	SCALE	DATE
		R. WISTON	

U. S. DEPARTMENT OF ENERGY
SUPERCONDUCTING SUPER COLLIDER

SSC LABORATORY

IR2 - LARGE SOLENOID DETECTOR
CUT AND COVER CONSTRUCTION
ISOMETRIC

DRAWING IR2-03 | DATE | REV 0 DATE 12/5/89 | SHEET

ZEL (1%2, 3 IRONWOOD.DGN
NUMEZ
07-DEC-1989 21:38

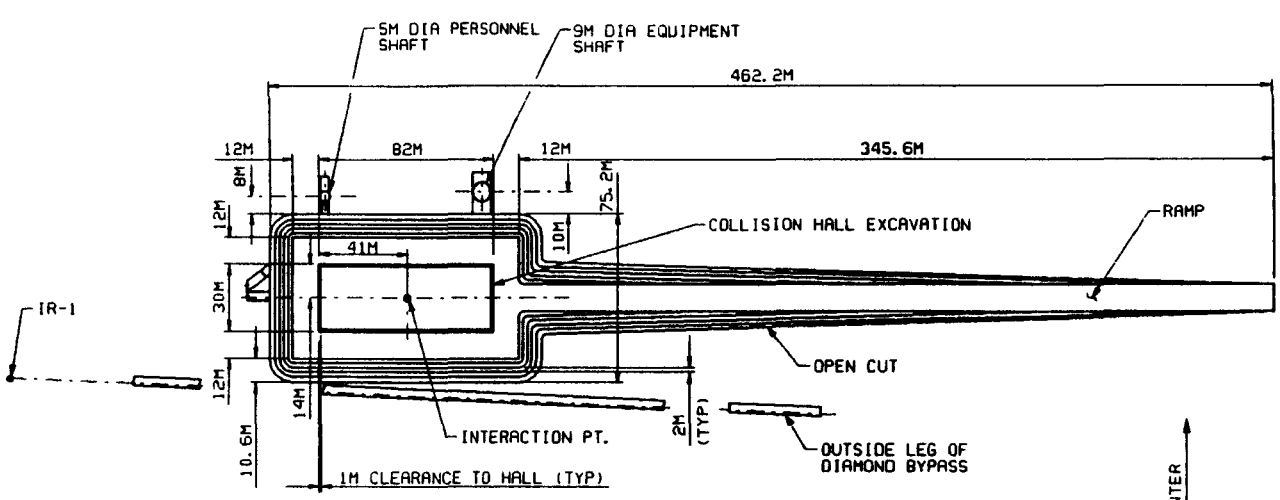

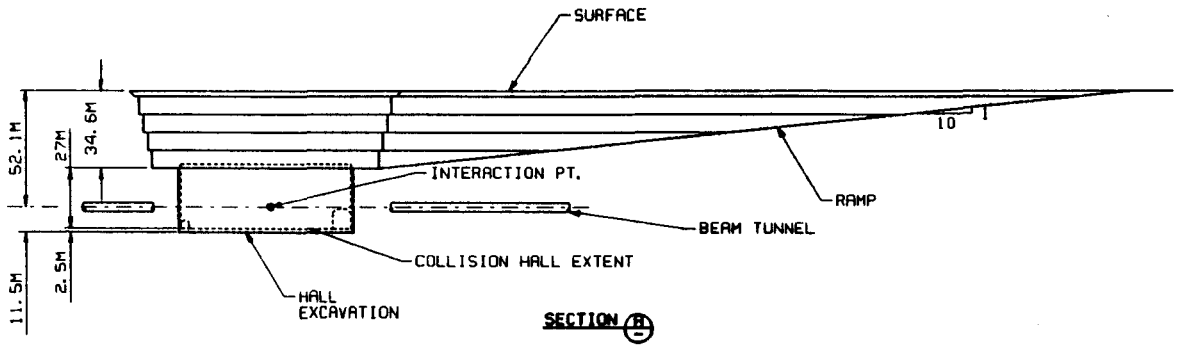

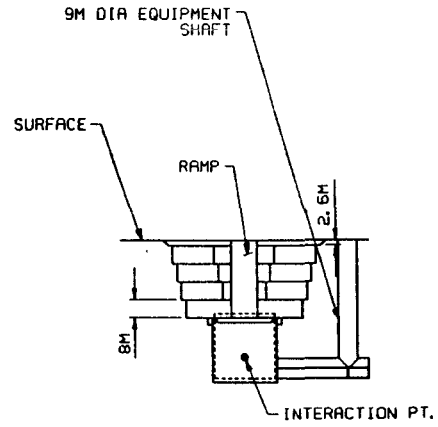

EQUIPMENT SHAFT & PORTION OF BYPASS TUNNEL OMITTED FOR CLARITY

(METERS)

DATE	REVISION	BY	CHK	APP	APP	REFERENCE DRAWINGS	NUMBER	NOTES	

APPROVAL	DATE	SCALE: NO SCALE	DATE
		DRAWN C. LAUGHTON	
		CHK R. MISTON	
		APP	
		APP	
		APP	

U.S. DEPARTMENT OF ENERGY
SUPERCONDUCTING SUPER COLLIDER

SSC LABORATORY

IR2 - LARGE SOLENOID DETECTOR
CUT AND COVER CONSTRUCTION
PLAN & SECTIONS

DRAWING IR2-04 | DATE | REV 0 DATE 12/7/89 | SHEET

TABLE OF WEIGHTS

COMPONENT	WEIGHT/MT	NO.	TOTAL/MT
FWD TRACKING, FWD CALORIMETER, FWD TOROID	1760	2	3520
INTERMEDIATE MUON TOROID (HALF)	2500	4	10000
END CAP (FLUX, CALORIMETER, MUON TRACK)	3500	2	7000
IRON FLUX RETURN, MUON TRACKING & SUPPORT	12000	1	12000
COIL	900	1	900
CENTRAL CALORIMETER	5000	1	5000
TRACKING	2	1	2
			38422

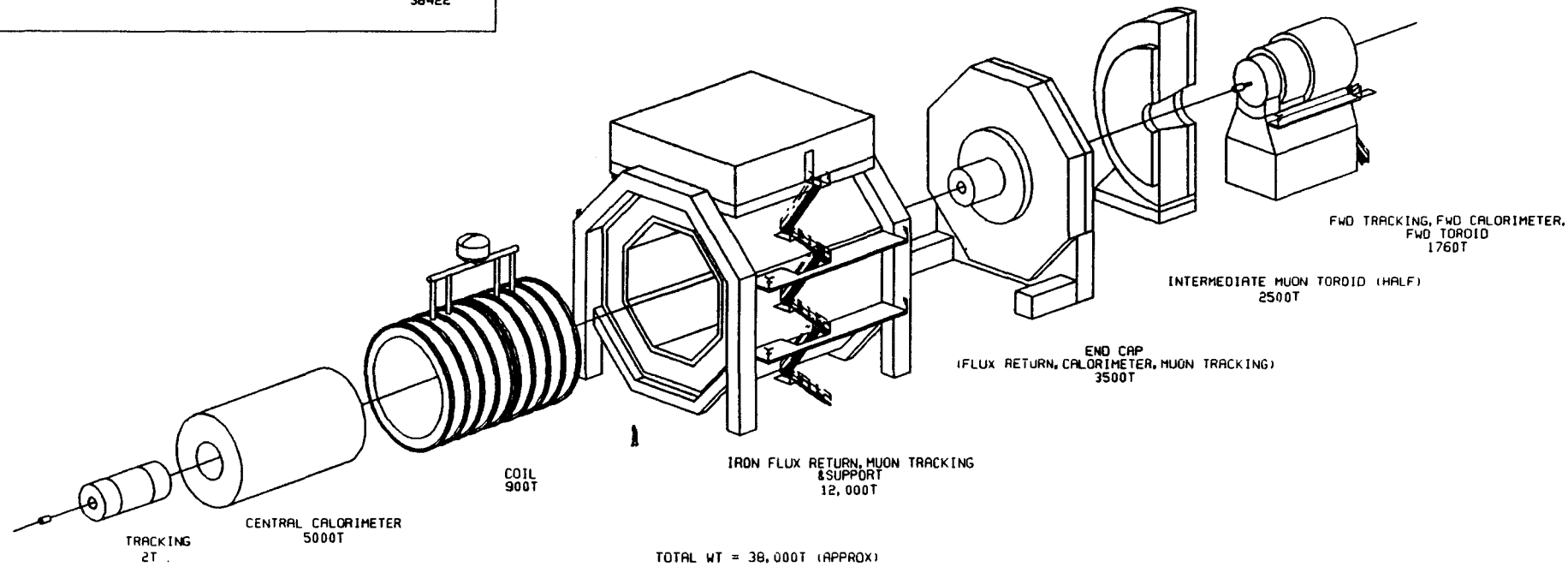

TOTAL WT = 38,000T (APPROX)

U.S. DEPARTMENT OF ENERGY
SUPERCONDUCTING SUPER COLLIDER

SSC LABORATORY

LARGE SOLENOID DETECTOR
EXPLODED ISOMETRIC

DRAWING IR2-10 | DATE | REV DATE 12/5/89 | SHEET

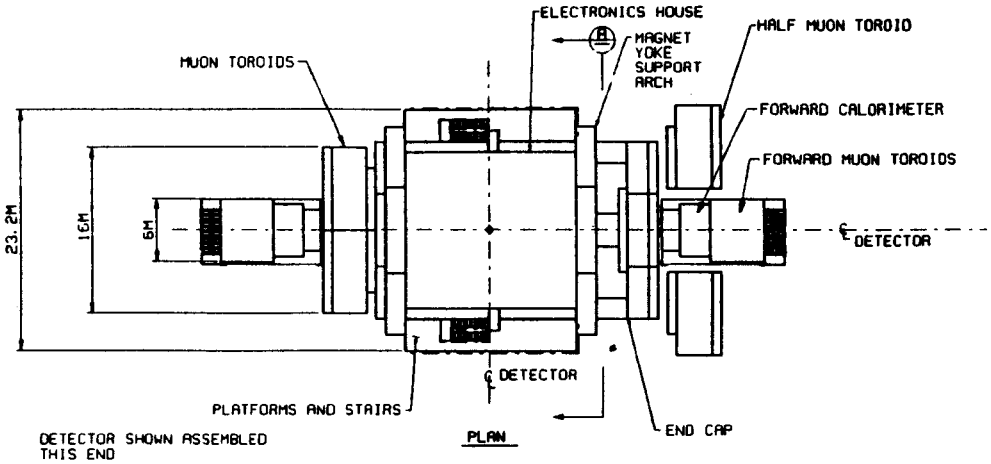

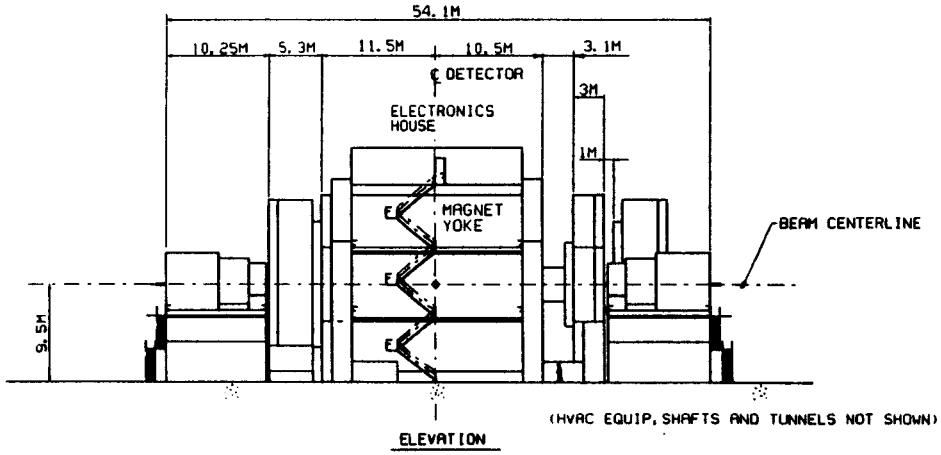

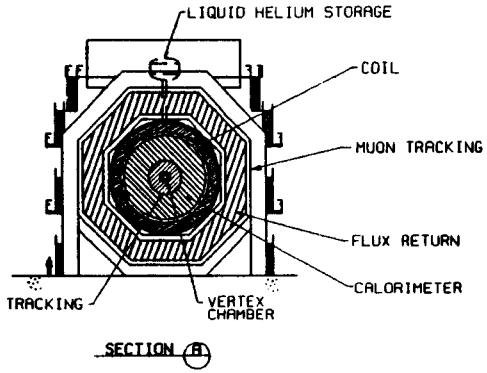

10 0 10 20 30 40 50 60
(METERS)

NO	DATE	REVISION	BY	APP	APP	REFERENCE DRAWINGS	NUMBER	NOTES	APPROVAL	DATE	SCALE: AS SHOWN

U.S. DEPARTMENT OF ENERGY
SUPERCONDUCTING SUPER COLLIDER

SSC LABORATORY

LARGE SOLENOID DETECTOR
PLAN AND SECTIONS

DRAWING IR2-11 | DATE | REV DATE 12/5/88 | SHEET

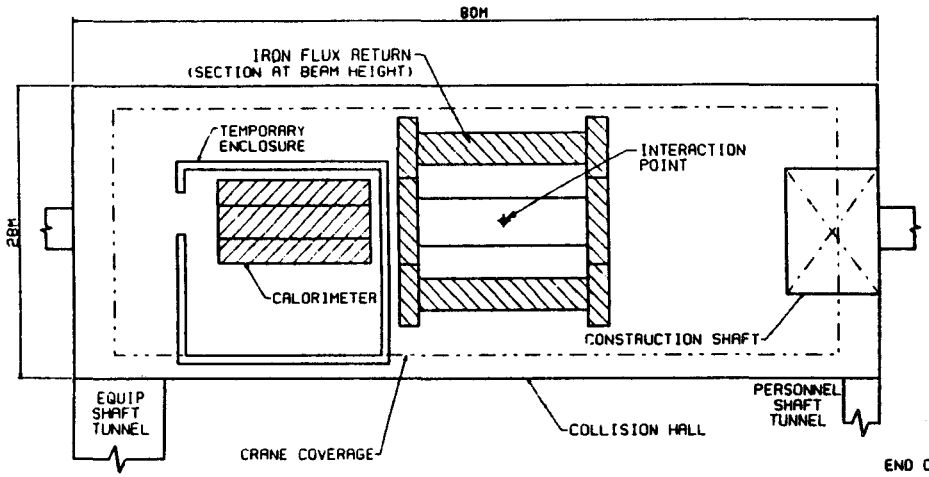

PLAN - ASSEMBLY STEP 1

ASSEMBLE FLUX RETURN

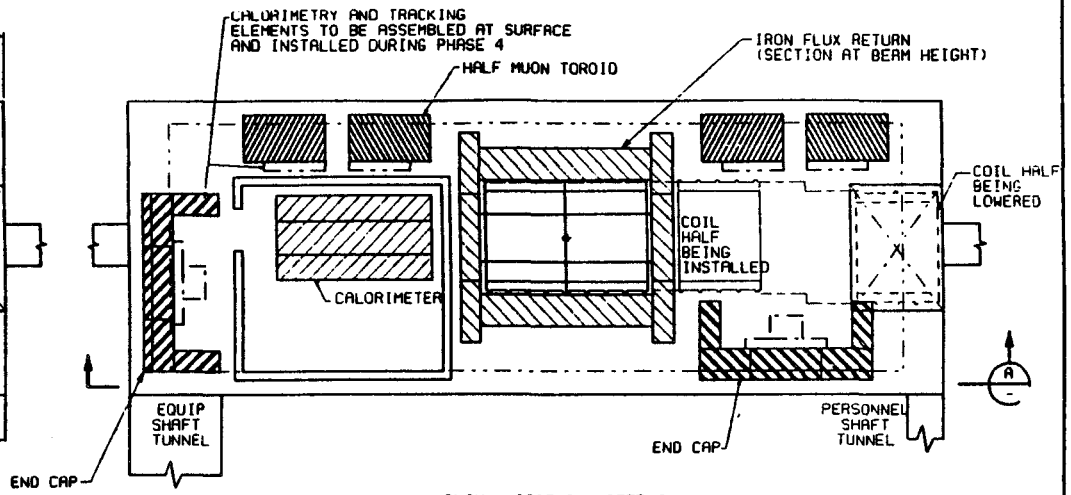

PLAN - ASSEMBLY STEP 2

ASSEMBLE ENDCAPS AND TOROIDS, INSTALL COIL

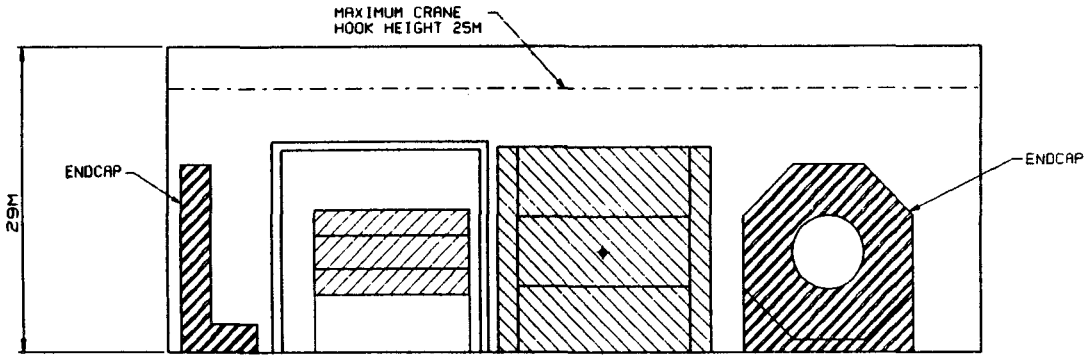

SECTION A

10 0 10 20 30 40 50 60

(METERS)

1. CROSS-HATCHING INDICATES COMPONENT UNDER CONSTRUCTION

NO	DATE	REVISION		APP	APP	REFERENCE DRAWINGS	NUMBER

NOTES

APPROVAL	DATE	SCALE	AS SHOWN	DATE
		DESIGNED	W. TERRY	
		DRAWN	W. TERRY	
		CHECKED		
		APPROVED		
		APPROVED		

U. S. DEPARTMENT OF ENERGY
SUPERCONDUCTING SUPER COLLIDER

SSC LABORATORY

LARGE SOLENOID DETECTOR
ASSEMBLY STEPS 1 & 2

DRAWING IR2-12 | DATE | REV 1 DATE 12/5/89 | SHEET

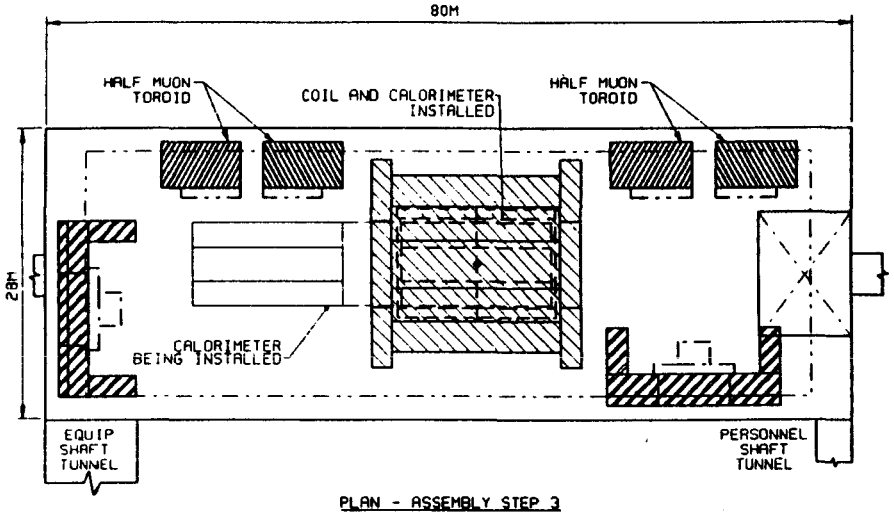

PLAN - ASSEMBLY STEP 3

INSTALL AND ALIGN MUON CHAMBERS
INSTALL CALORIMETER

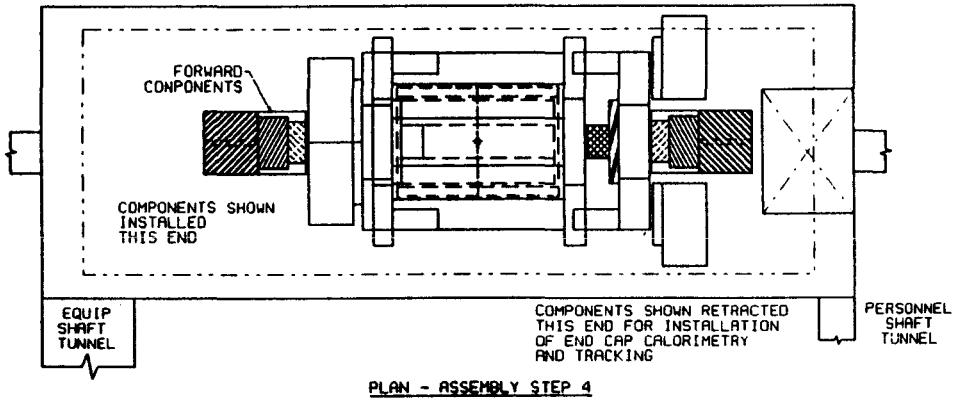

PLAN - ASSEMBLY STEP 4

MOVE COMPLETED COMPONENTS IN PLACE
ASSEMBLE FORWARD COMPONENTS
INSTALL END PLUG CALORIMETRY AND TRACKING
INSTALL MUON TRACKING

10 0 10 20 30 40 50 60
(METERS)

NO	DATE	REVISION	APP	REFERENCE DRAWINGS	NUMBER

1. CROSS-HATCHING INDICATES COMPONENT UNDER CONSTRUCTION

NOTES

APPROVAL	DATE	SCALE: AS SHOWN	DATE
		DRAWN: W. TERRY	
		CHECKED: W. TERRY	
		APPROVED:	
		APPROVED:	
		APPROVED:	

U.S. DEPARTMENT OF ENERGY
SUPERCONDUCTING SUPER COLLIDER

SSC LABORATORY

LARGE SOLENOID DETECTOR
ASSEMBLY STEPS 3 & 4

DRAWING IA2-13 | DATE | REV 1 DATE 12/5/89 | SHEET

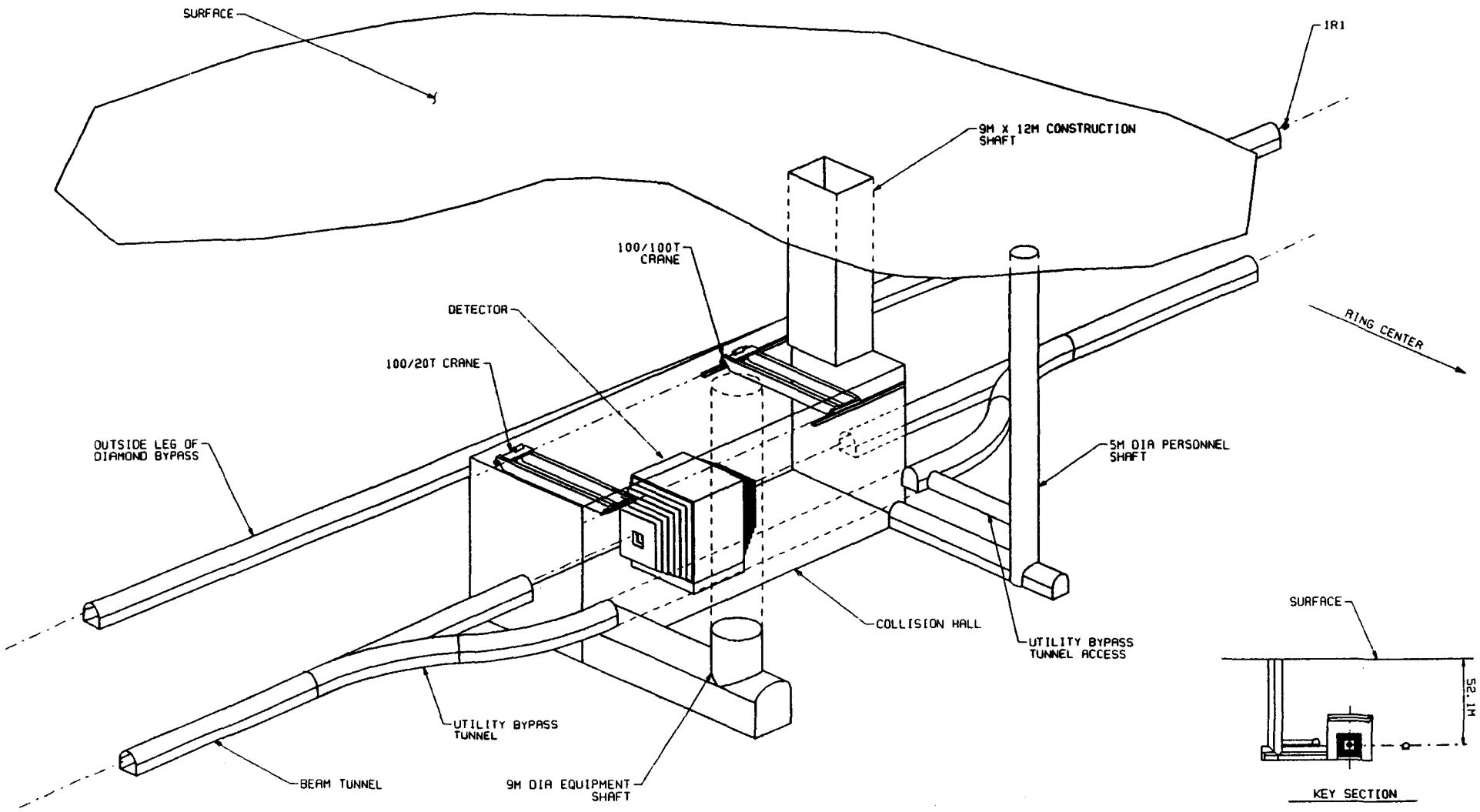

ISOMETRIC

KEY SECTION

NO	DATE	REVISION	CHK	APP	APP	REFERENCE DRAWINGS	NUMBER	NOTES

APPROVAL	DATE	SCALE: NONE	DATE
DRAWN		W. TERRY	
CHK		R. MUNEZ	
DESIGN			
APPROVED			
APPROVED			

U.S. DEPARTMENT OF ENERGY
SUPERCONDUCTING SUPER COLLIDER

SSC LABORATORY

IR2 - NON-MAGNETIC DETECTOR
FINISHED HALL
ISOMETRIC

DRAWING IR2A-01 | DATE | REV 1 DATE 12/5/89 | SHEET

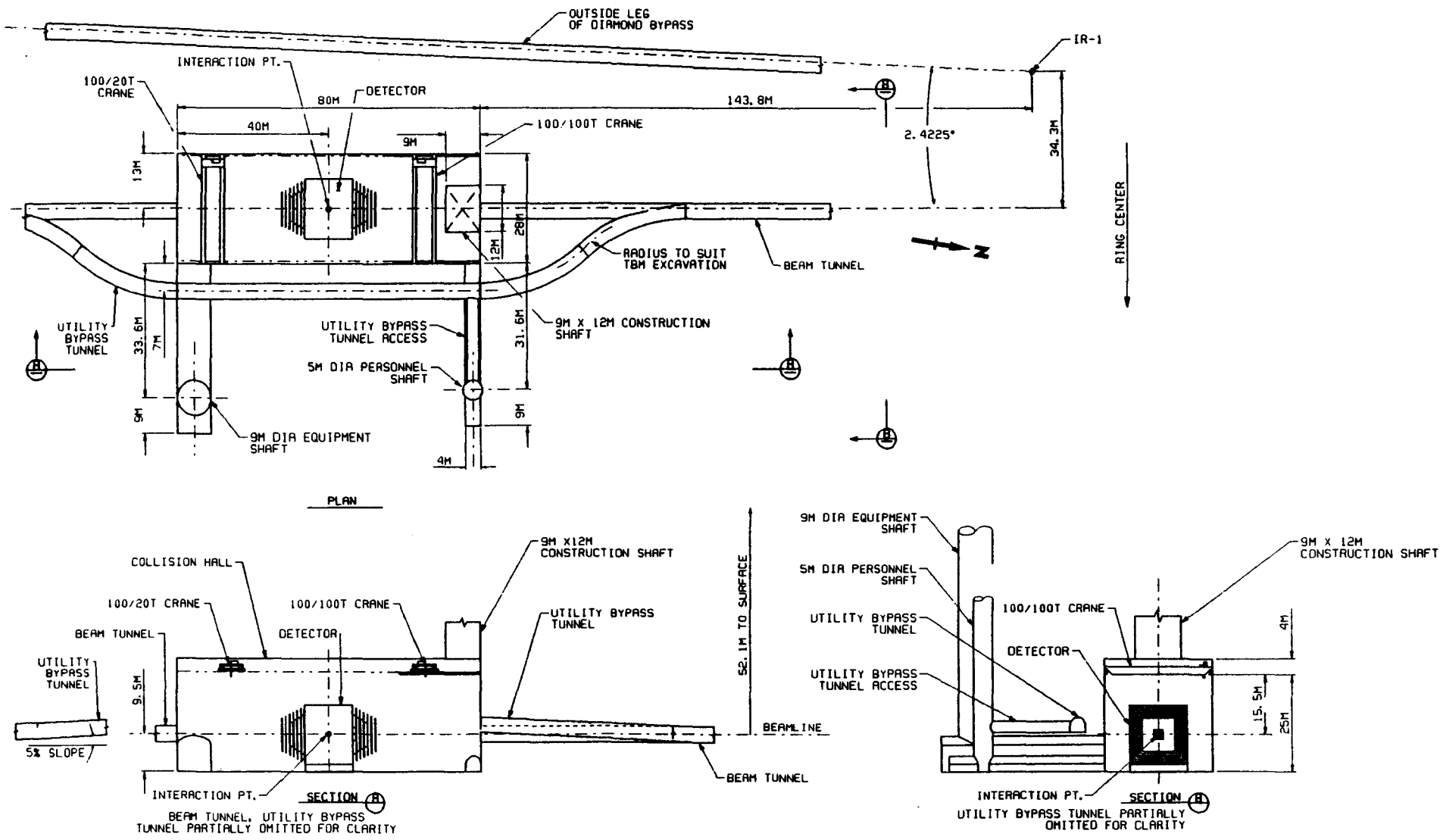

U. S. DEPARTMENT OF ENERGY
SUPERCONDUCTING SUPER COLLIDER

SSC LABORATORY

IR2 - NON-MAGNETIC DETECTOR
FINISHED HALL
PLAN AND SECTIONS

DRAWING IR2A-02 | DATE | REV DATE 12/5/89 | SHEET

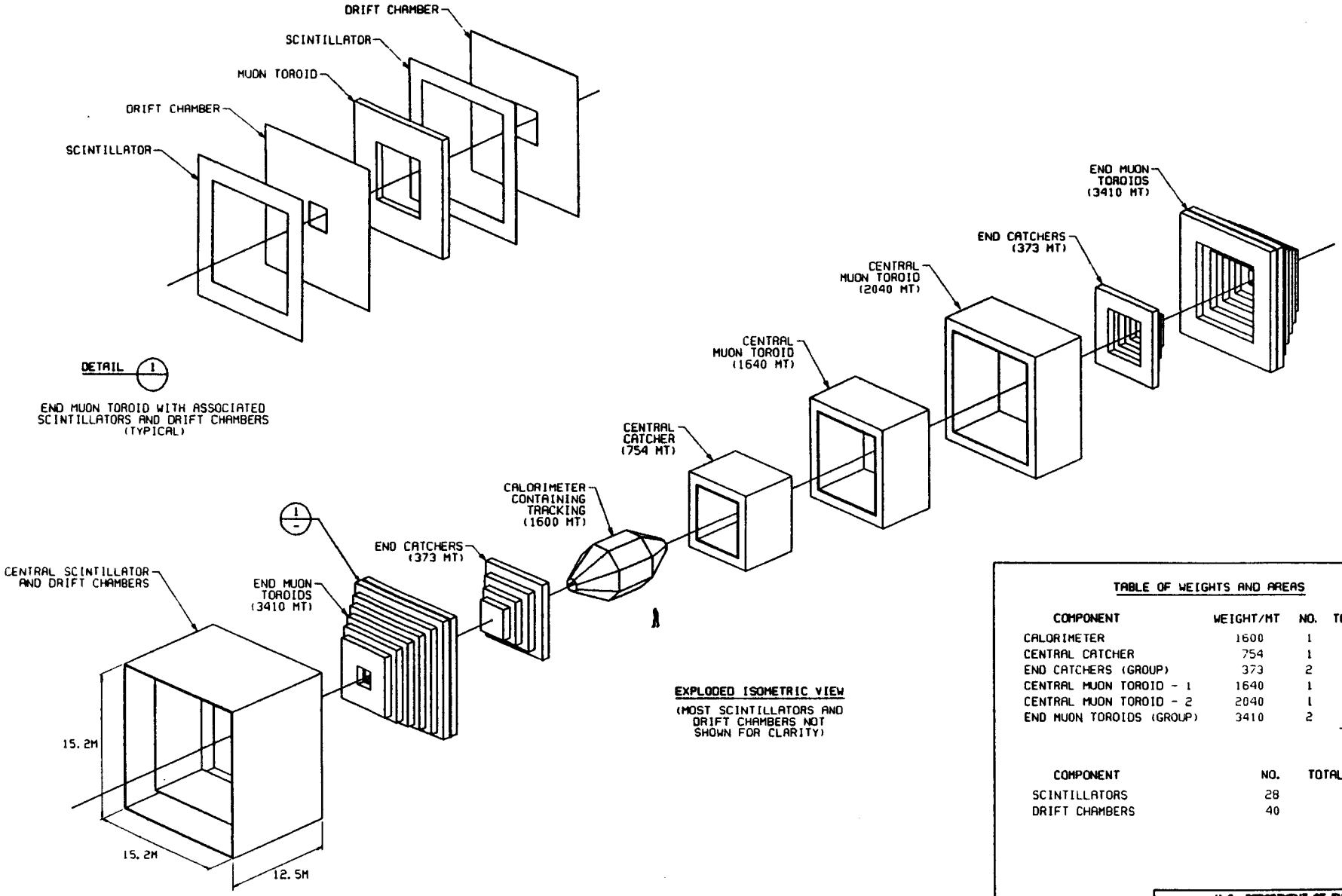

EXPLODED ISOMETRIC VIEW

(MOST SCINTILLATORS AND DRIFT CHAMBERS NOT SHOWN FOR CLARITY)

TABLE OF WEIGHTS AND AREAS

COMPONENT	WEIGHT/MT	NO.	TOTAL/MT
CALORIMETER	1600	1	1600
CENTRAL CATCHER	754	1	754
END CATCHERS (GROUP)	373	2	746
CENTRAL MUON TOROID - 1	1640	1	1640
CENTRAL MUON TOROID - 2	2040	1	2040
END MUON TOROIDS (GROUP)	3410	2	6820
			13600

COMPONENT	NO.	TOTAL AREA/SQ M
SCINTILLATORS	28	3103
DRIFT CHAMBERS	40	5157

U.S. DEPARTMENT OF ENERGY
SUPERCONDUCTING SUPER COLLIDER

SSC LABORATORY

NON-MAGNETIC DETECTOR
EXPLODED ISOMETRIC

DRAWING IR2A-10 | DATE | REV DATE 12/5/88 | SHEET

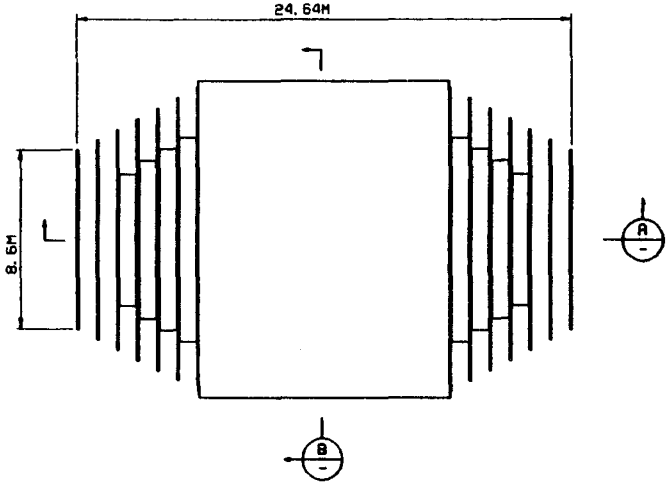

PLAN/ELEVATION

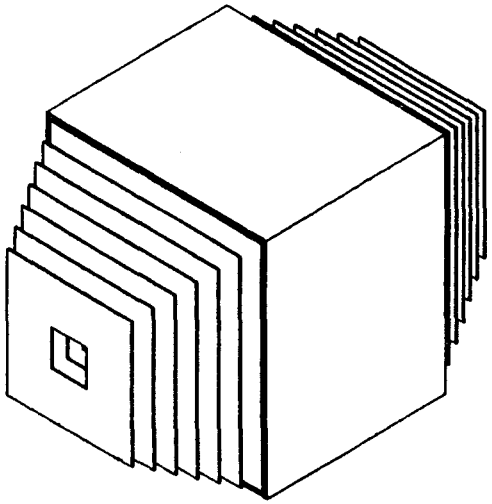

ISOMETRIC VIEW

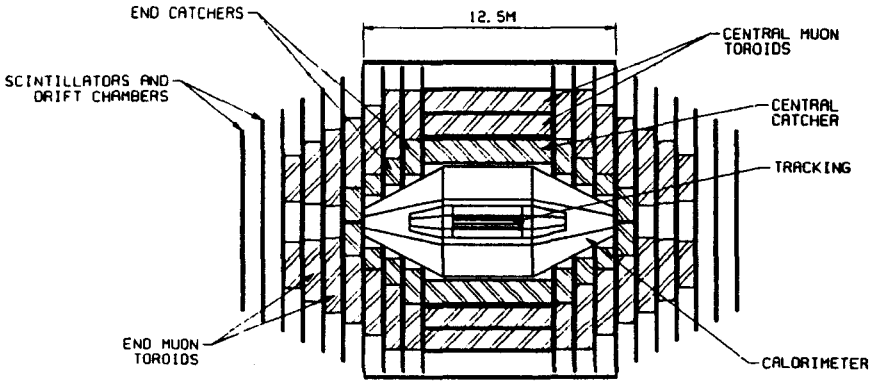

SECTION A

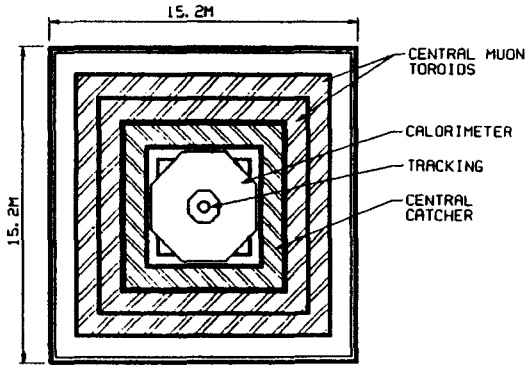

SECTION B

(METERS)

DATE	REVISION		APP	APP	REFERENCE DRAWINGS	NUMBER	NOTES

APPROVAL	DATE	SCALE	NO SCALE	DATE
		DRAWN	H. HORN	
		CHKD	HAMILTON	
		ENGRG		
		PROJMGR		

U. S. DEPARTMENT OF ENERGY
SUPERCONDUCTING SUPER COLLIDER

SSC LABORATORY

NON-MAGNETIC DETECTOR
PLANS AND SECTIONS

DRAWING	DATE	REV	SHEET
LA2A-11		DATE 12/5/89	

ZG1 (LA2_31)REV11.DGN

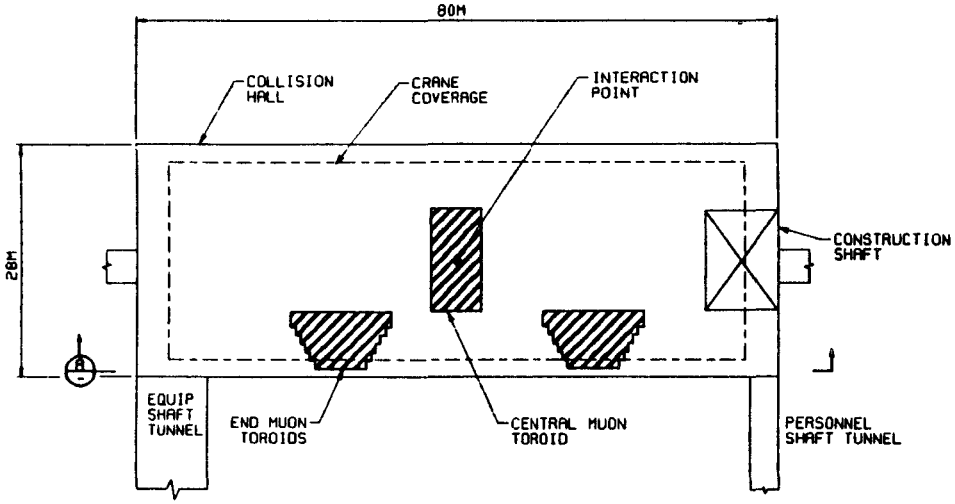

PLAN - ASSEMBLY STEP 1

ASSEMBLE CENTRAL MUON TOROID.
ASSEMBLE END TOROIDS.

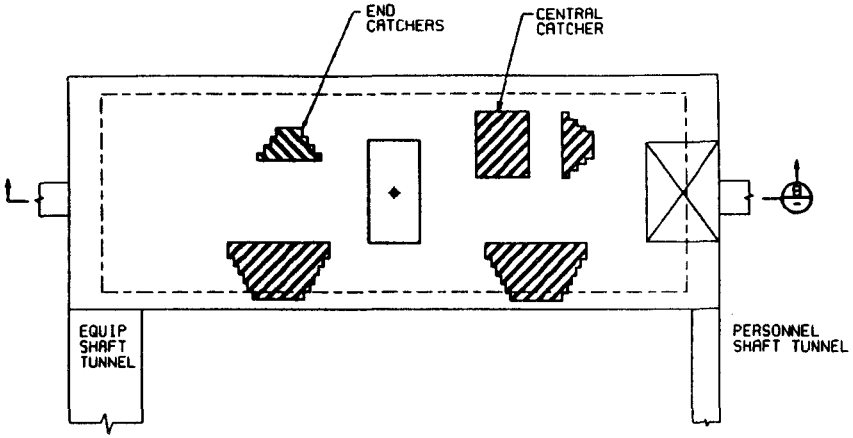

PLAN - ASSEMBLY STEP 2

ASSEMBLE END CATCHERS.
INSTALL CATCHER CHAMBERS.

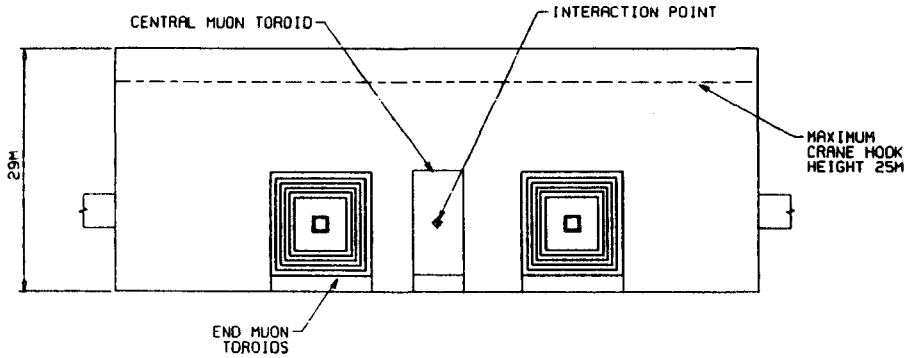

SECTION A

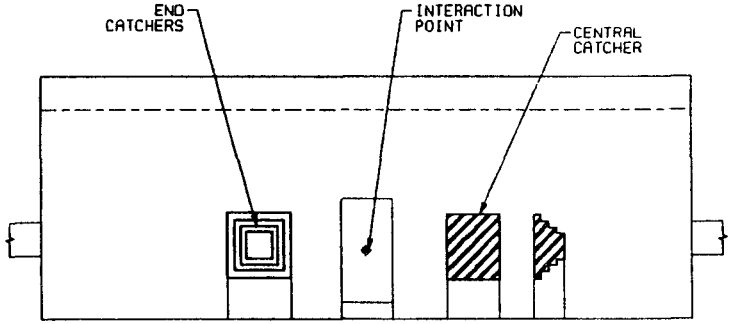

SECTION B

1. CROSS-HATCHING INDICATES COMPONENTS UNDER CONSTRUCTION

NO	DATE	REVISION	APP	REFERENCE DRAWINGS	NUMBER	NOTES

APPROVAL	DATE	SCALE: AS SHOWN	DATE

U. S. DEPARTMENT OF ENERGY
SUPERCONDUCTING SUPER COLLIDER

SSC LABORATORY

NON-MAGNETIC DETECTOR
ASSEMBLY STEPS 1 & 2

DRAWING 1A2A-12 | DATE | REV 1 DATE 12/5/89 | SHEET

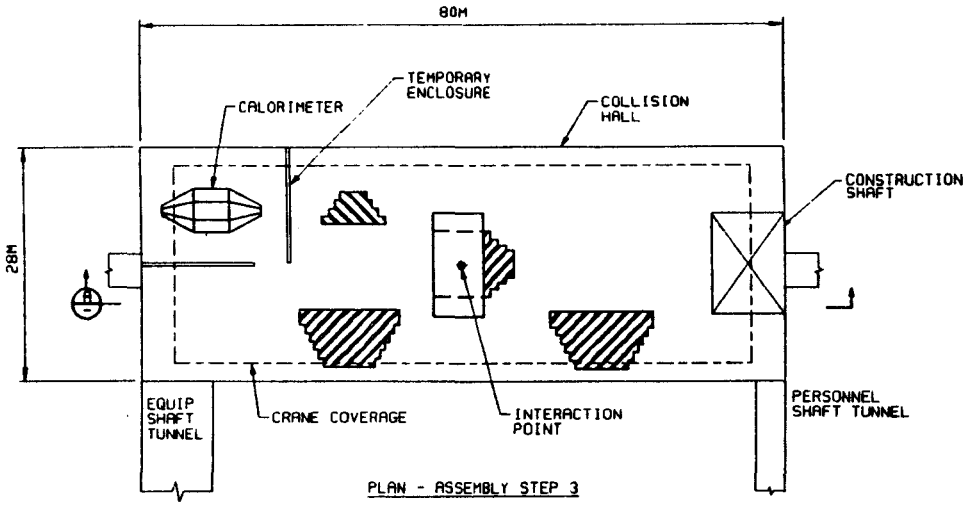

PLAN - ASSEMBLY STEP 3

ASSEMBLE CALORIMETER.
INSTALL MUON CHAMBERS.

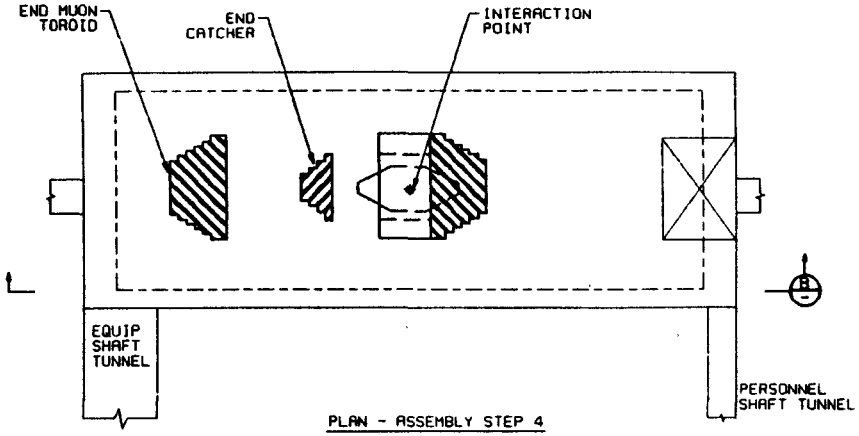

PLAN - ASSEMBLY STEP 4

CLOSE DETECTOR.

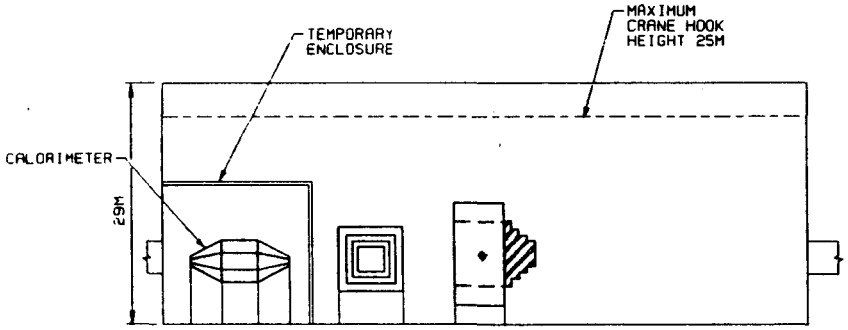

SECTION A

END MUON TOROIDS
OMITTED FOR CLARITY

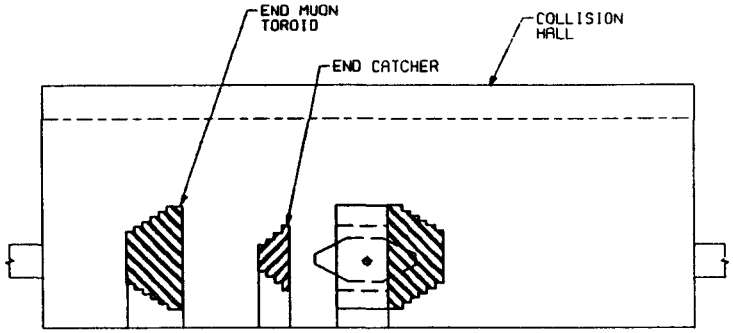

SECTION B

10 0 10 20 30 40 50 60 70 80

(METERS)

NO	DATE	REVISION	BY	APP	APP	REFERENCE DRAWINGS	NUMBER

1. CROSS-HATCHING INDICATES COMPONENT UNDER CONSTRUCTION

NOTES

APPROVAL	DATE	SCALE AS SHOWN	DATE
		DRAWN M. DAVIS	

U.S. DEPARTMENT OF ENERGY
SUPERCONDUCTING SUPER COLLIDER

SSC LABORATORY

NON-MAGNETIC DETECTOR
ASSEMBLY STEPS 3 & 4

DRAWING 1A2A-13 | DATE | REV | DATE 12/5/89 | SHEET

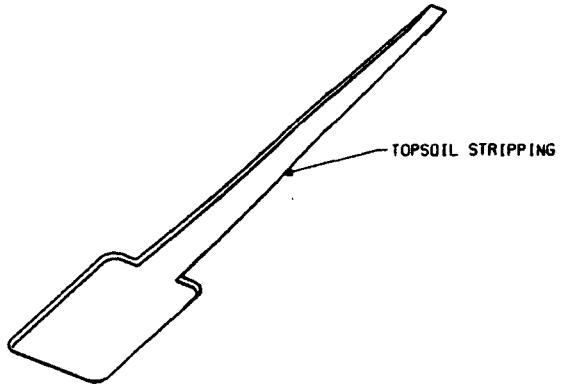

TOP-SOIL & WEATHERED ROCK STRIPPING
• REMOVAL OF TOP-SOIL AND WEATHERED ROCK TO EXPOSE INTACT BEDROCK SURFACE

STEP 1

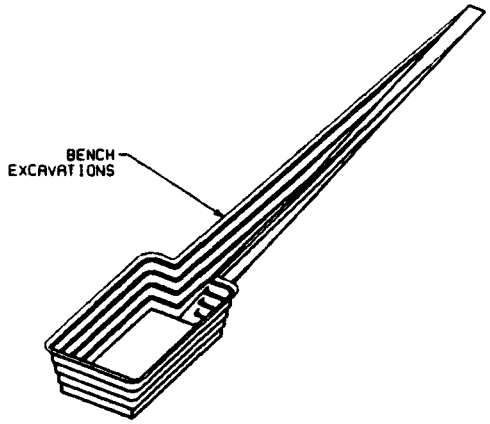

EXCAVATION OF OPEN PIT AND RAMP
• EXCAVATION OF THE AC BY RIPPER
• FORMATION OF 6m BENCHES

STEP 2

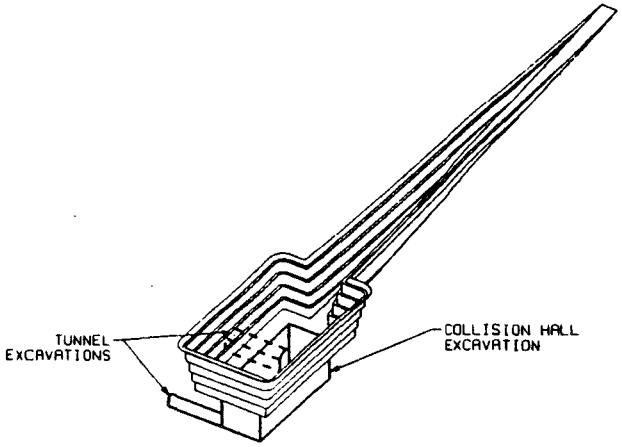

EXCAVATION OF HALL
• EXCAVATION OF THE ROCK (AC & EFS) BY RIPPER
• EXCAVATION OF THE E & P SHAFT CONNECTOR TUNNELS

STEP 3

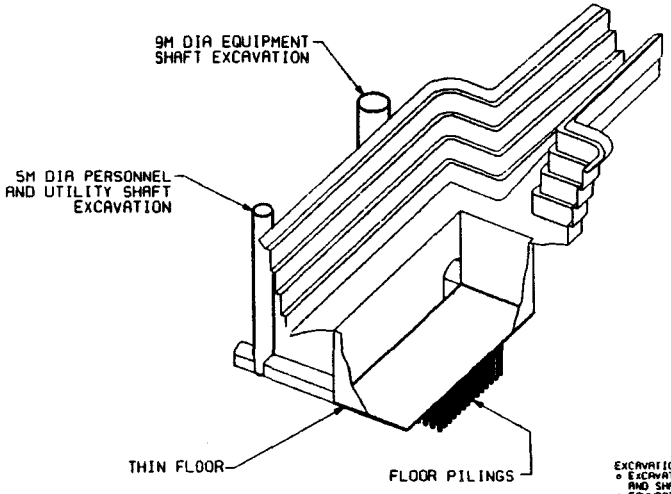

EXCAVATION OF E & P SHAFTS & FOUNDATION PILING
• EXCAVATION OF THE E AND P SHAFT CONNECTOR TUNNELS AND SHAFTS
• FOUNDATION WORK (PILING) IN THE DETECTOR AREA

STEP 4

NO	DATE	REVISION	BY	CHK	APP	APP	REFERENCE DRAWINGS	NUMBER

1. HEAVY LINE WEIGHT INDICATES CURRENT ACTIVITY

NOTES

APPROVAL	DATE	SCALE: NO SCALE	DATE
		DRAWN: C. LAUGHTON	
		CHK: R. NUNEZ	
		APPROVED	
		APPROVED	

U.S. DEPARTMENT OF ENERGY
SUPERCONDUCTING SUPER COLLIDER

SSC LABORATORY

IR2 - LARGE SOLENOID DETECTOR HALL
CUT AND COVER CONSTRUCTION
STEPS 1 - 4

DRAWING IR25-01 | DATE | REV 0 DATE 12/5/89 | SHEET

Z61:(102,3)IR25001.DGN NUNEZ 08-DEC-1989 13:52

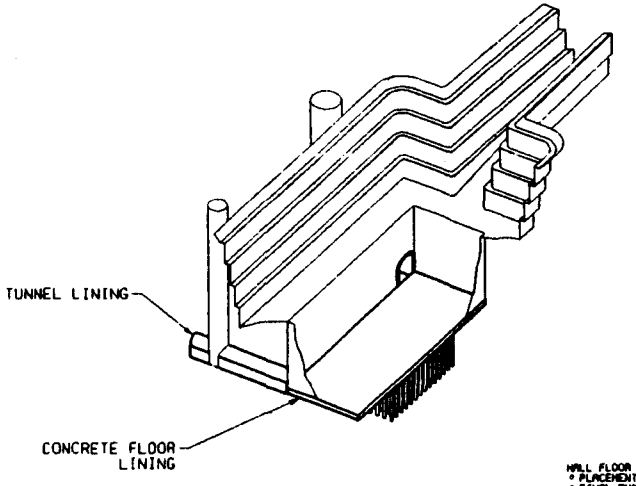

HALL FLOOR & SHAFT TUNNEL LININGS
* PLACEMENT OF THE MAIN FLOOR SLAB
* FINAL SUPPORT OF THE SHAFT CONNECTOR TUNNELS

STEP 5

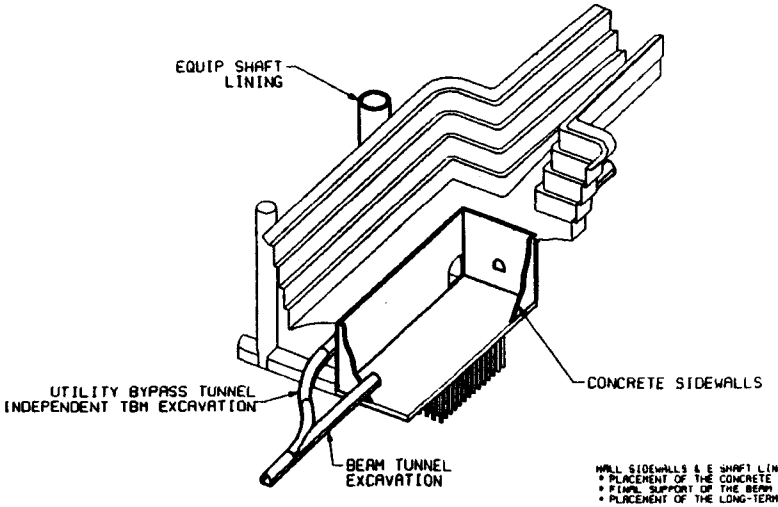

HALL SIDEWALLS & E SHAFT LINING
* PLACEMENT OF THE CONCRETE SIDEWALLS
* FINAL SUPPORT OF THE BEAM TUNNELS
* PLACEMENT OF THE LONG-TERM SHAFT LINING (EQUIPMENT)

STEP 6

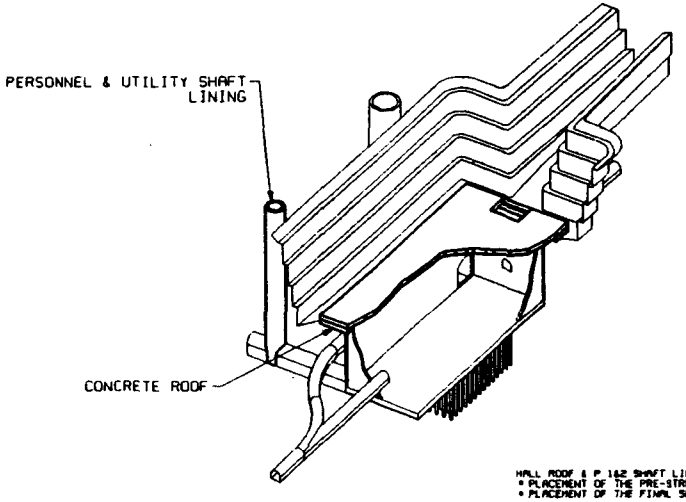

HALL ROOF & P-162 SHAFT LININGS
* PLACEMENT OF THE PRE-STRESSED BEAMS AND CAST-IN-SITU CONCRETE ROOF
* PLACEMENT OF THE FINAL SHAFT LININGS (PERSONNEL AND UTILITIES)

STEP 7

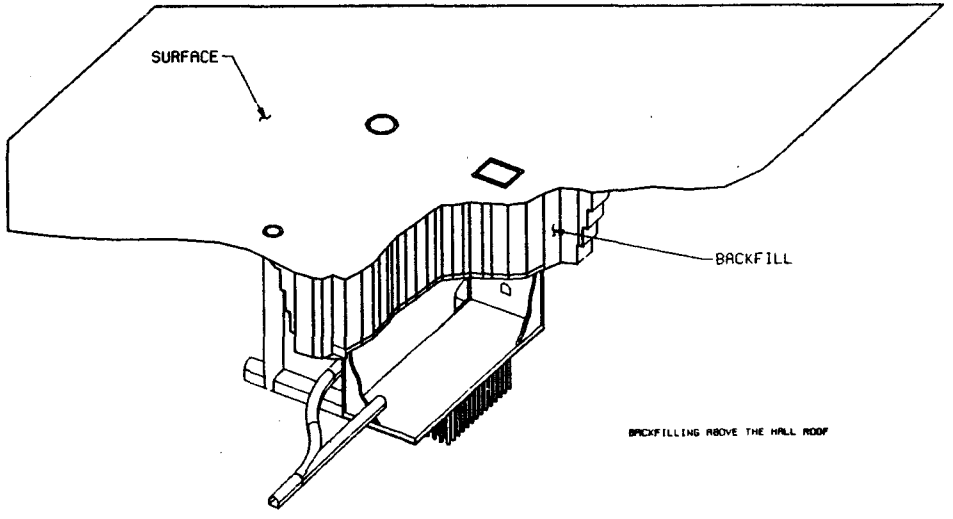

BACKFILLING ABOVE THE HALL ROOF

STEP 8

NO	DATE	REVISION		APP	APP	APP

REFERENCE DRAWINGS	NUMBER

1. HEAVY LINE WEIGHT INDICATES CURRENT ACTIVITY

NOTES

APPROVAL	DATE

SCALE	NO SCALE	DATE
DESIGN	C. LAUGHTON	
DRAWN	R. NUNEZ	
CHECKED		
ENGINEER		
ENGINEER		

U. S. DEPARTMENT OF ENERGY
SUPERCONDUCTING SUPER COLLIDER

SSC LABORATORY

K1 - LARGE SOLENOID DETECTOR HALL
CUT AND COVER CONSTRUCTION
STEPS 5 - 8

DRAWING 1825-02 | DATE | REV 0 DATE 12/5/88 | SHEET

NUNEZ
08-DEC-1988 17:58

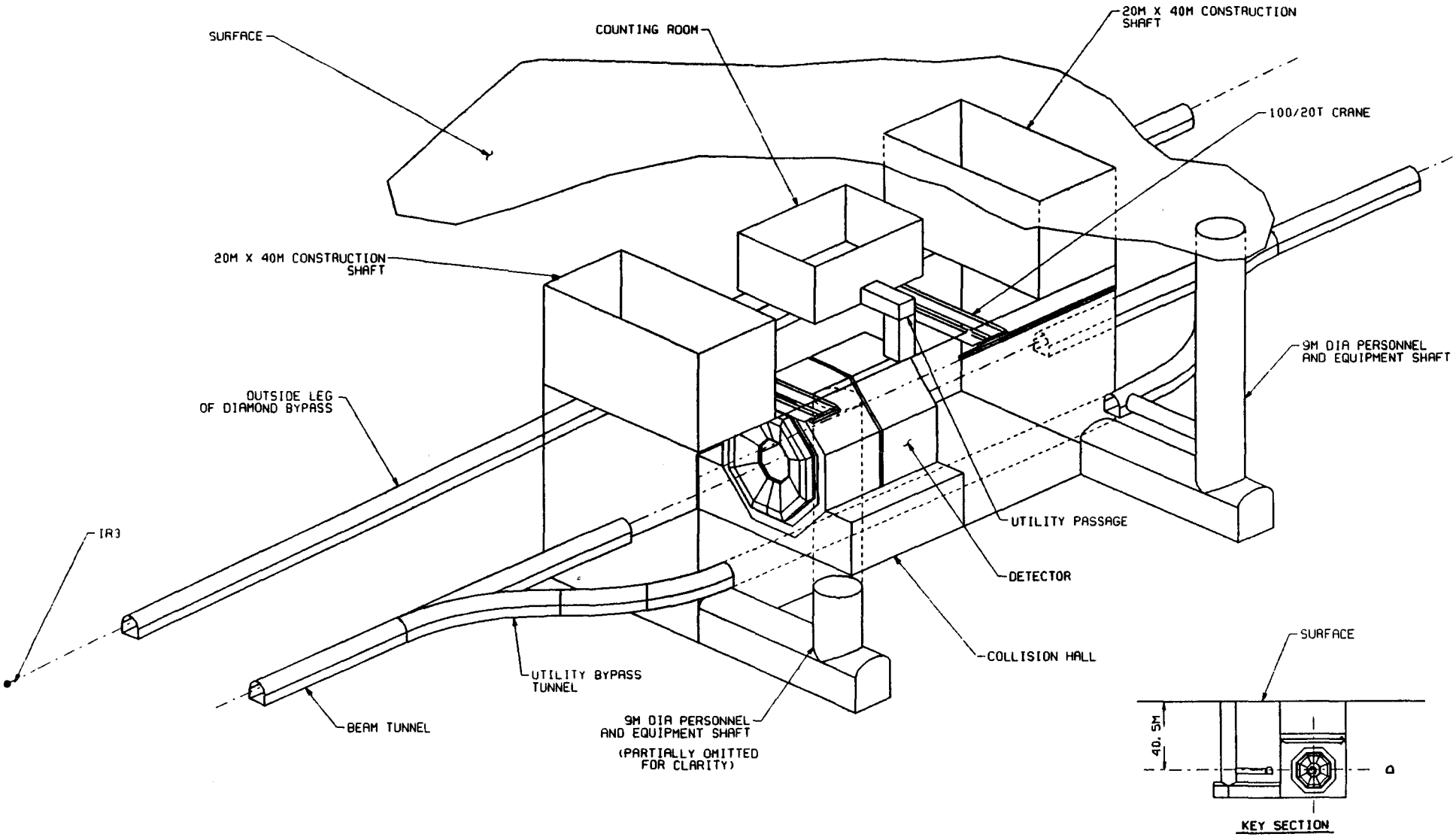

ISOMETRIC

NO	DATE	REVISION	BY	CHK	APP	APP	REFERENCE DRAWINGS	NUMBER	NOTES	APPROVAL	DATE

SCALE NONE
DESIGNED S. HAMILTON
DRAWN R. WIGTON
CHECKED
APPROVED
APPROVED

U. S. DEPARTMENT OF ENERGY
SUPERCONDUCTING SUPER COLLIDER

SSC LABORATORY

IR3 - L* DETECTOR
FINISHED HALL
ISOMETRIC

DRAWING IR3-01 | DATE | REV DATE 12/5/91 | SHEET

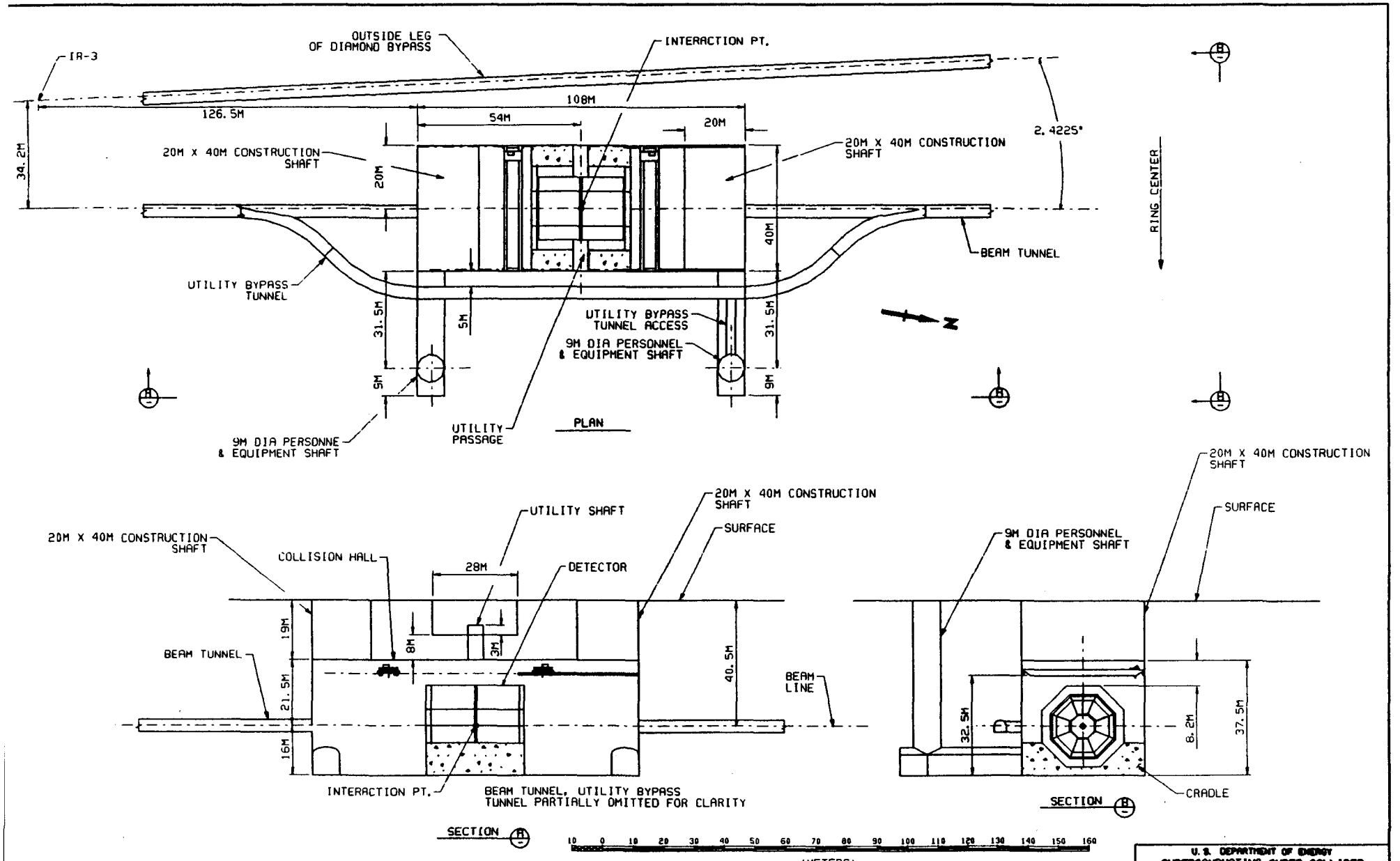

U.S. DEPARTMENT OF ENERGY
SUPERCONDUCTING SUPER COLLIDER

SSC LABORATORY

IR3 - LM DETECTOR
FINISHED HALL
PLAN AND SECTIONS

DRAWING IR3-02 | DATE | SHEET

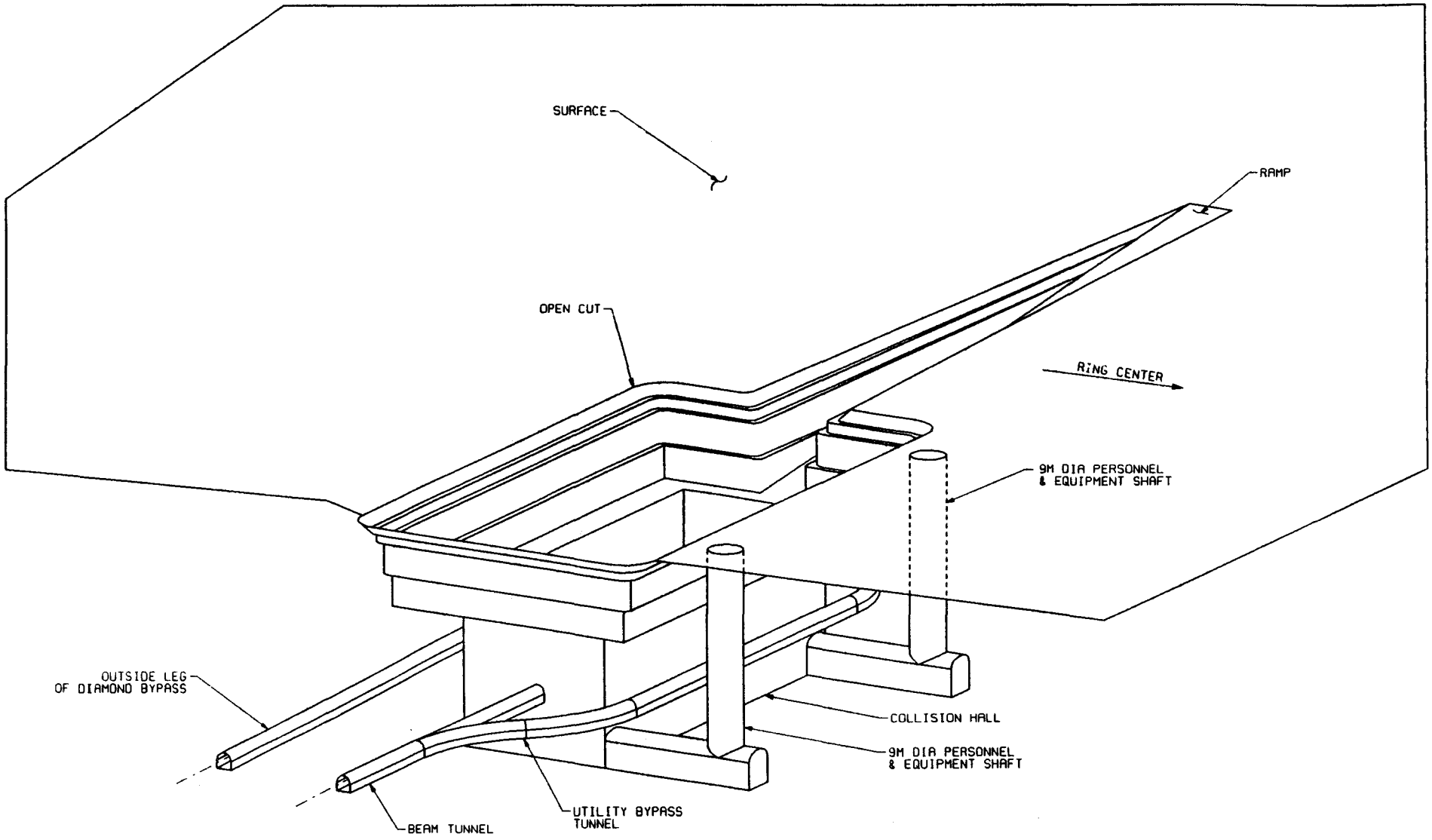

ISOMETRIC

NO	DATE	REVISION		APP	APP	REFERENCE DRAWINGS	NUMBER	NOTES

APPROVAL	DATE	SCALE NONE	DATE
		DESIGN S. HAMILTON	
		DRAWN R. WIGTON	
		CHECKED	
		ENGINEER	
		PROJECT ENGINEER	

U. S. DEPARTMENT OF ENERGY
SUPERCONDUCTING SUPER COLLIDER

SSC LABORATORY

IR3 - L* DETECTOR
CUT AND COVER CONSTRUCTION
ISOMETRIC

DRAWING IR3-03 | DATE | REV 0 DATE 12/5/89 | SHEET

PGN (LNK: 3) (ROOT) CDM

NAME Z
07-DEC-1989 21:59

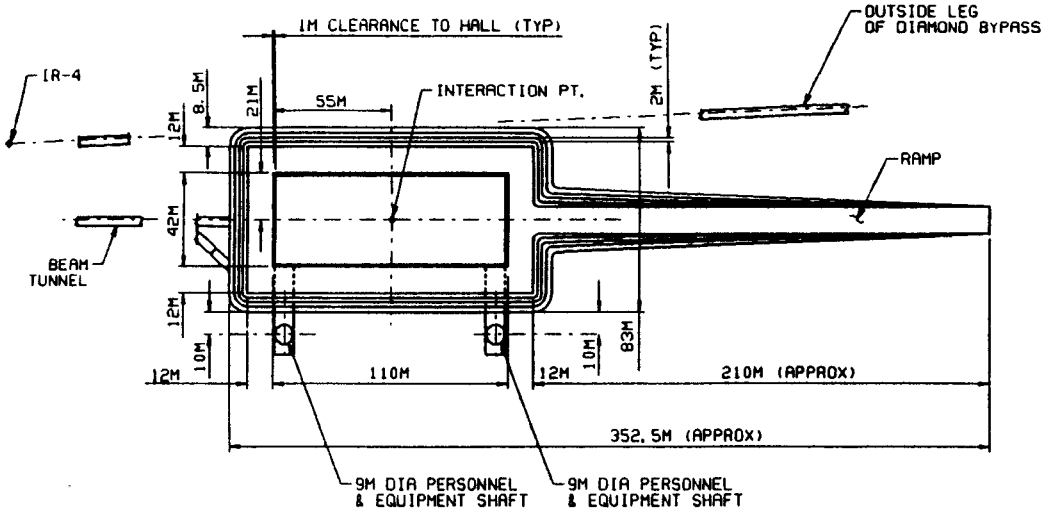

PLAN

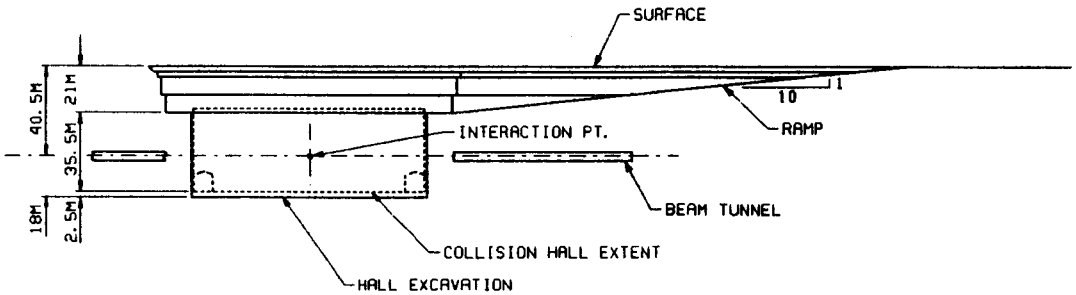

SECTION A

PERSONNEL & EQUIPMENT SHAFTS & UTILITY
BYPASS TUNNEL OMITTED FOR CLARITY

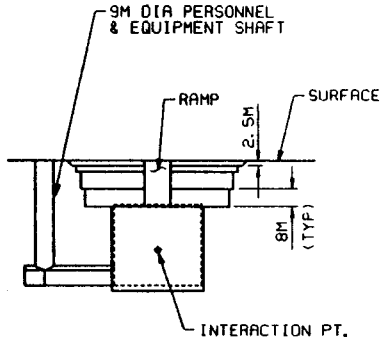

SECTION B

BYPASS TUNNEL
OMITTED FOR CLARITY

(METERS)

NO	DATE	REVISION		APP	APP	REFERENCE DRAWINGS	NUMBER	NOTES	

APPROVAL	DATE	SCALE AS SHOWN	DATE
DRAWN		E. HAMILTON	
CHECK			
ENGINEER		R. WESTON	
PROJECT ENGINEER			
PROJECT MANAGER			

U. S. DEPARTMENT OF ENERGY
SUPERCONDUCTING SUPER COLLIDER

SSC LABORATORY

IR3 - L* DETECTOR
CUT AND COVER CONSTRUCTION
PLAN AND SECTIONS

DRAWING IR3-04 | DATE | REV 0 DATE 12/5/89 | SHEET

TABLE OF WEIGHTS

COMPONENT	WEIGHT (MT)	NO.	TOTAL (MT)
SUPPORT TUBE AND DISK	1000	1	1000
HADRON CALORIMETER	1000	1	1000
MAGNET COIL	3400	2	6800
MAGNET YOKE	17000	2	34000
RETURN YOKE DOOR	1250	4	5000
IRON RETURN CROWN	5000	2	10000
MUON TRACKING MODULE	10	32	320
MUON CHAMBER ENDCAPS	96	2	192
			58312

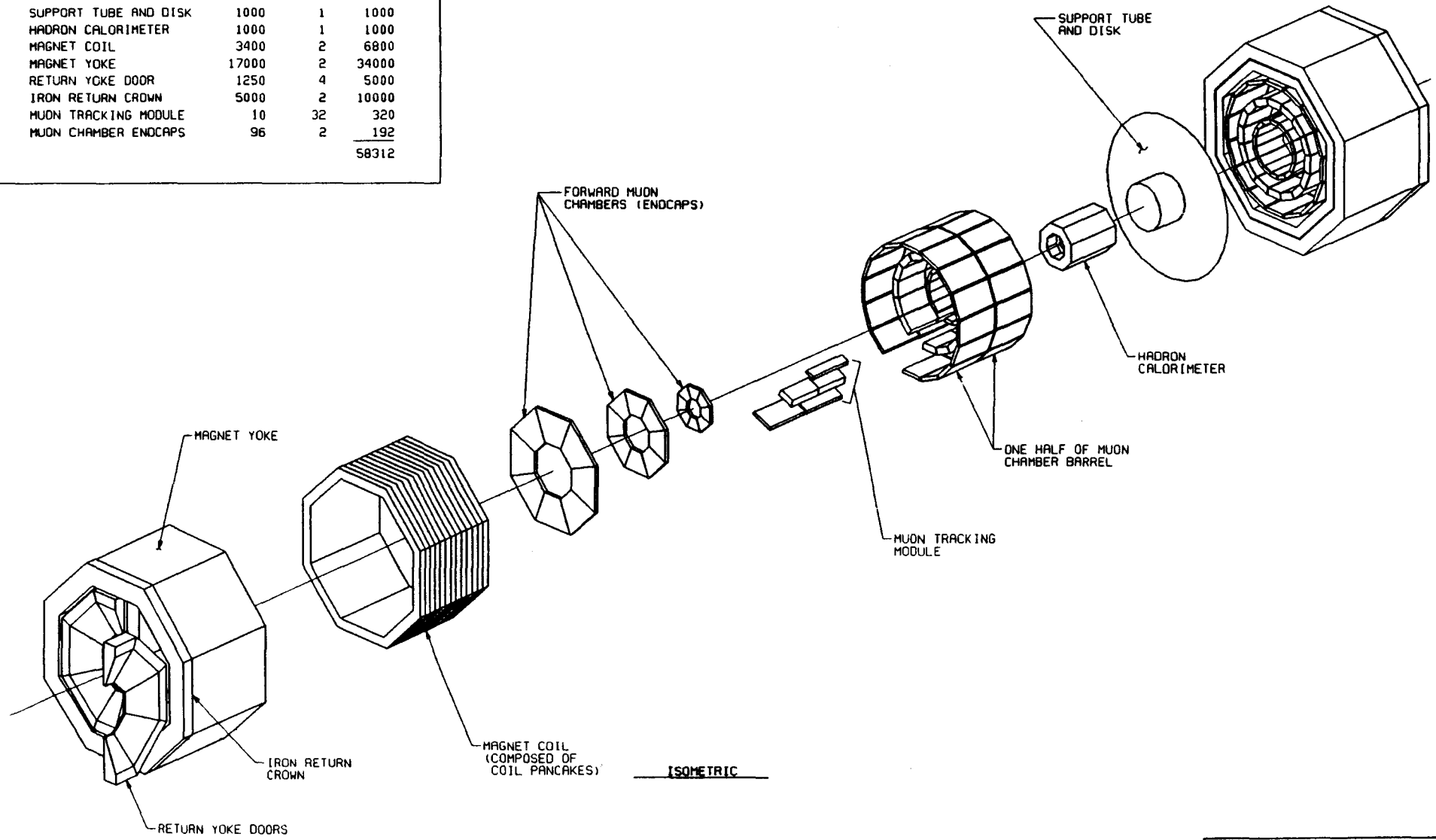

ISOMETRIC

U. S. DEPARTMENT OF ENERGY
SUPERCONDUCTING SUPER COLLIDER

SSC LABORATORY

L# DETECTOR

EXPLODED ISOMETRIC

DRAWING IR3-10 | DATE | SHEET

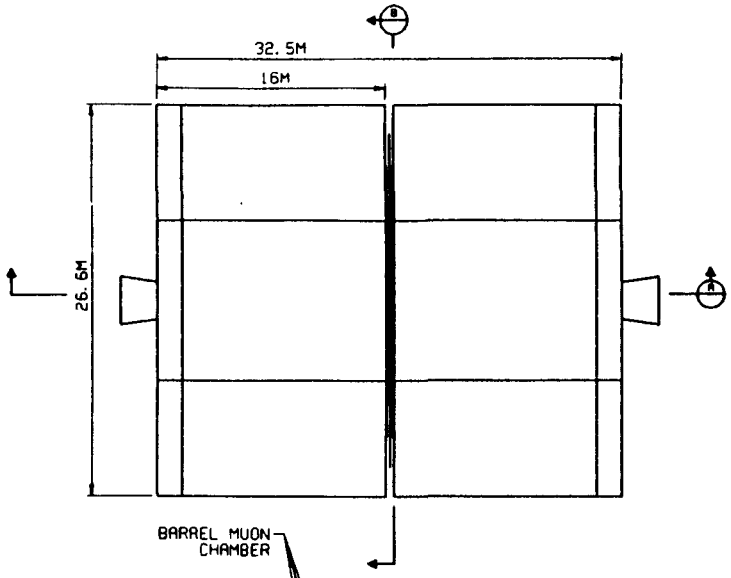

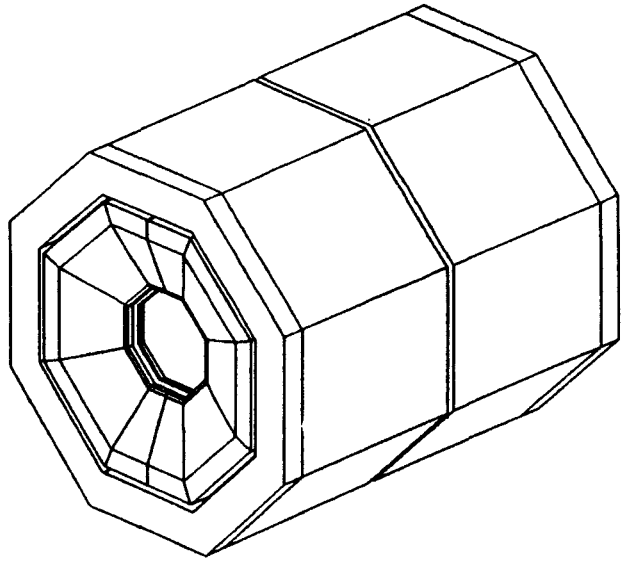

ISOMETRIC
FORWARD CALORIMETER
OMITTED FOR CLARITY

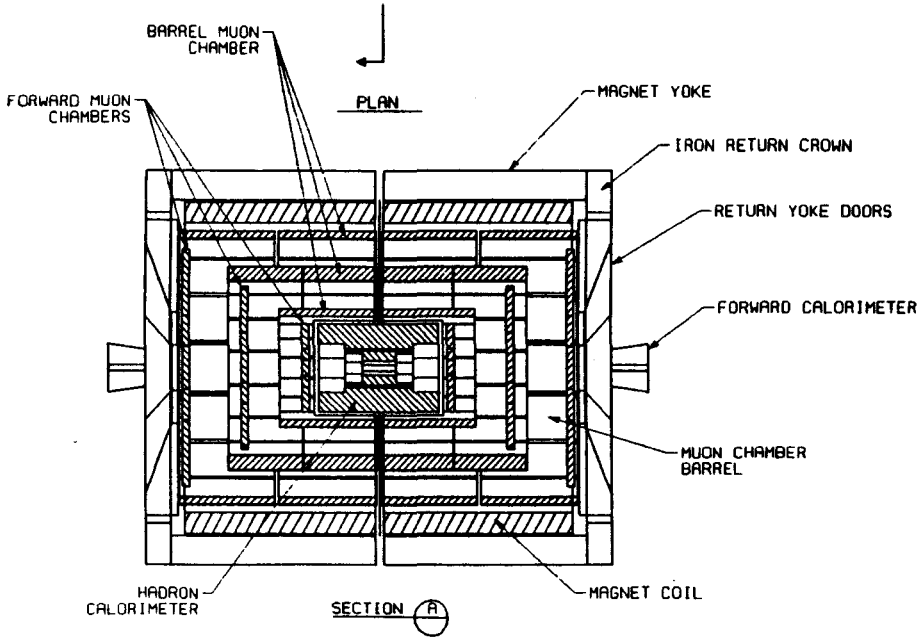

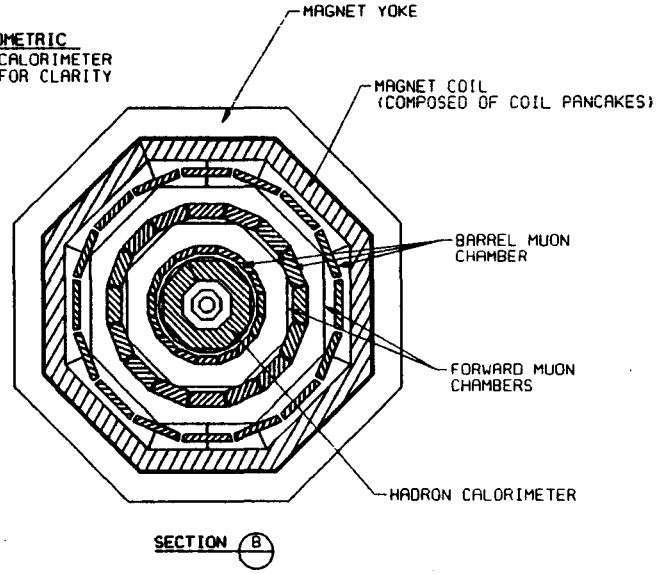

5 0 5 10 15 20 25 30 35 40
(METERS)

NO	DATE	REVISION		APP	APP	APP	REFERENCE DRAWINGS	NUMBER	NOTES

APPROVAL	DATE	SCALE AS SHOWN	DATE
		S. HAMILTON/A. NUNEZ	

U.S. DEPARTMENT OF ENERGY
SUPERCONDUCTING SUPER COLLIDER

SSC LABORATORY

L* DETECTOR
PLAN AND SECTIONS

DRAWING IR3-11 DATE ____ REV 1 (DATE) 12/5/88 SHEET ____

JSL (102, 3) (#311, DGN NUNEZ 04-DEC-1989 21:47

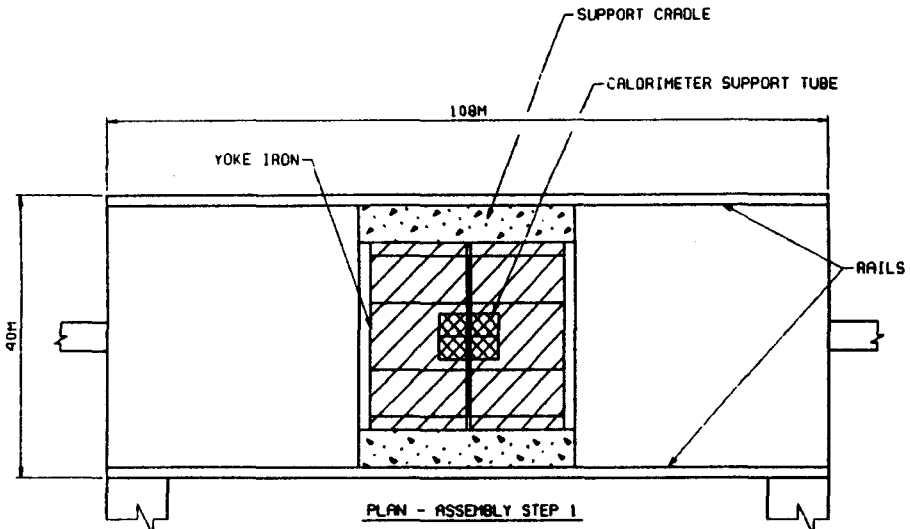

PLAN - ASSEMBLY STEP 1

INSTALL CENTRAL DISK & CALORIMETER SUPPORT TUBE
ASSEMBLE BOTTOM THREE OCTANTS OF MAGNET YOKE
INSTALL RAILS & SUPPORT CRADLE

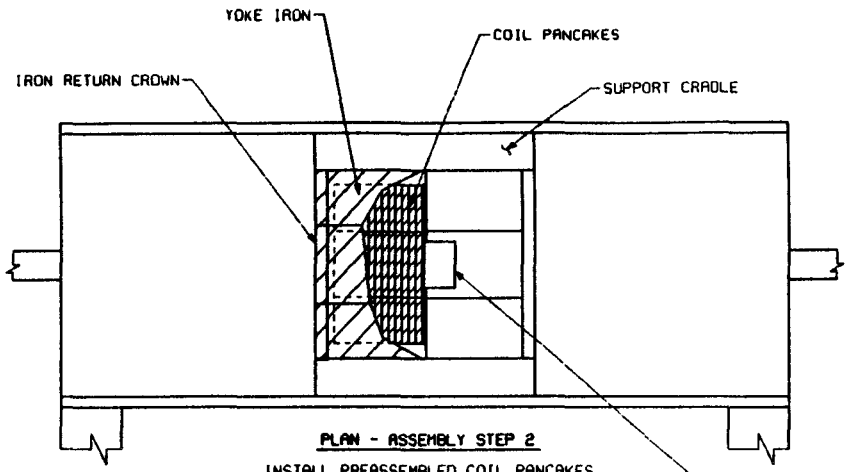

PLAN - ASSEMBLY STEP 2

INSTALL PREASSEMBLED COIL PANCAKES
INSTALL IRON RETURN CROWN
INSTALL REMAINING FIVE OCTANTS OF MAGNET YOKE

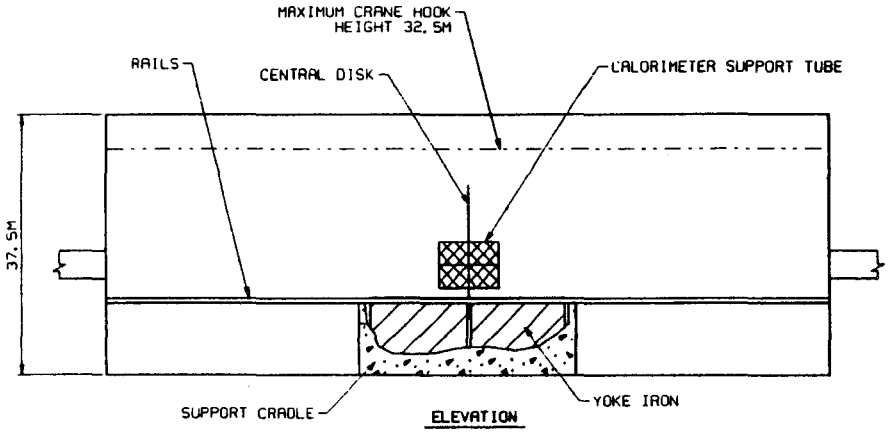

ELEVATION

SUPPORT CRADLE PARTIALLY OMITTED FOR CLARITY

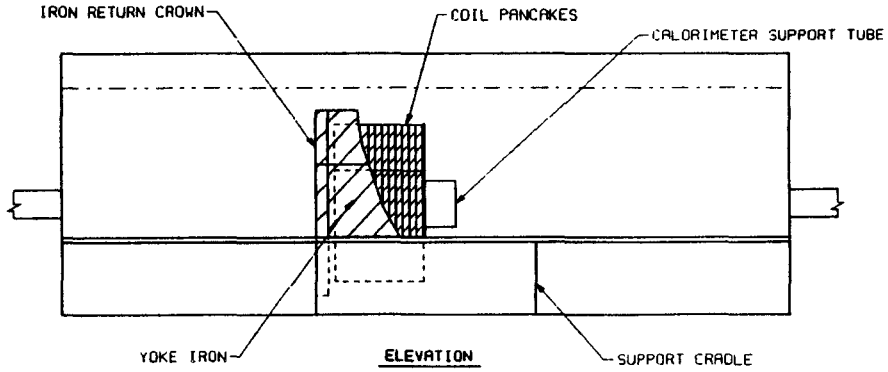

ELEVATION

(METERS)

1. CROSSHATCHING OR TEXTURE INDICATES CURRENT ASSEMBLY OR CONSTRUCTION

U. S. DEPARTMENT OF ENERGY
SUPERCONDUCTING SUPER COLLIDER

SSC LABORATORY

L* DETECTOR

ASSEMBLY STEPS 1 & 2

DRAWING 1R3-12 | DATE | REV 1 | SHEET

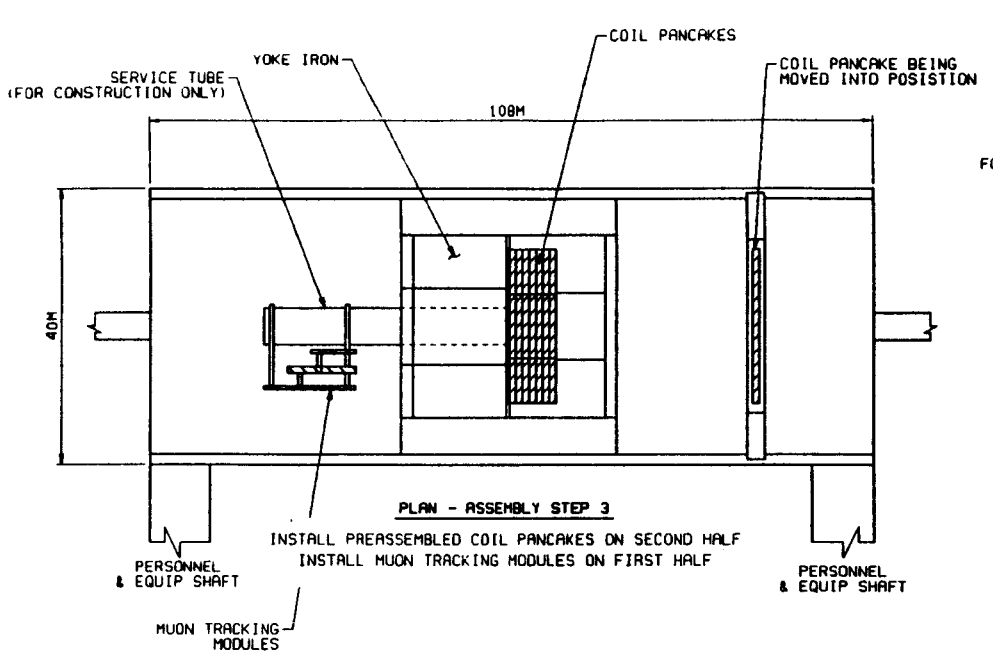

PLAN - ASSEMBLY STEP 3

INSTALL PREASSEMBLED COIL PANCAKES ON SECOND HALF
INSTALL MUON TRACKING MODULES ON FIRST HALF

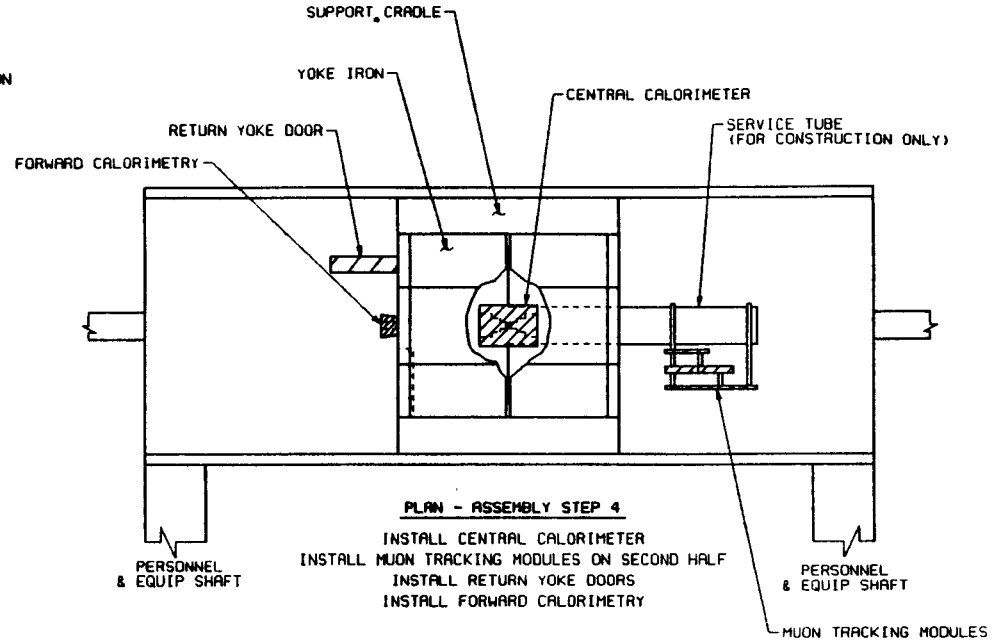

PLAN - ASSEMBLY STEP 4

INSTALL CENTRAL CALORIMETER
INSTALL MUON TRACKING MODULES ON SECOND HALF
INSTALL RETURN YOKE DOORS
INSTALL FORWARD CALORIMETRY

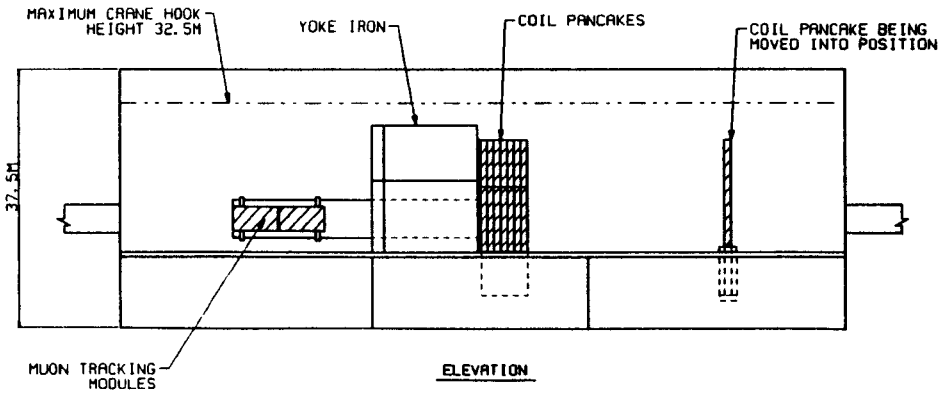

ELEVATION

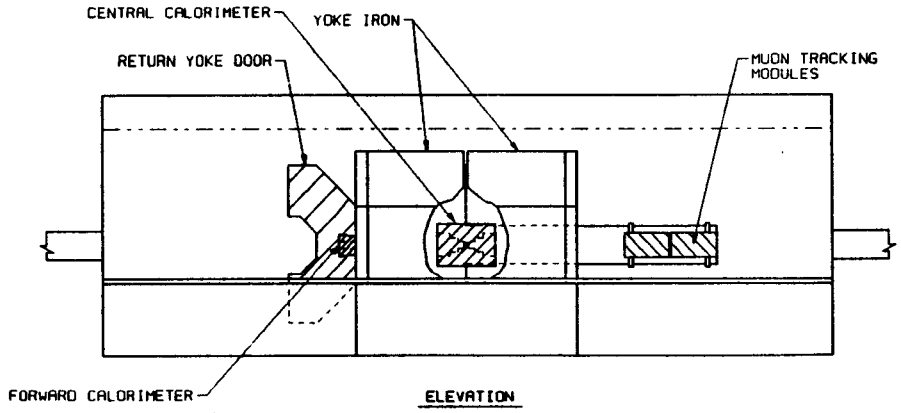

ELEVATION

(METERS)

NO	DATE	REVISION	BY	CHK	APP	APP	REFERENCE DRAWINGS	NUMBER

1. CROSSHATCHING OR TEXTURE INDICATES CURRENT ASSEMBLY OR CONSTRUCTION

NOTES

APPROVAL	DATE	SCALE: AS SHOWN	DATE
		DRAWN	
		CHK	
		DESIGN	A. NAGEI
		APPROVED	
		APPROVED	
		APPROVED	

U.S. DEPARTMENT OF ENERGY
SUPERCONDUCTING SUPER COLLIDER

SSC LABORATORY

L* DETECTOR

ASSEMBLY STEPS 3 & 4

DRAWING IR3-13 | DATE | REV 1 DATE 12/5/89 | SHEET

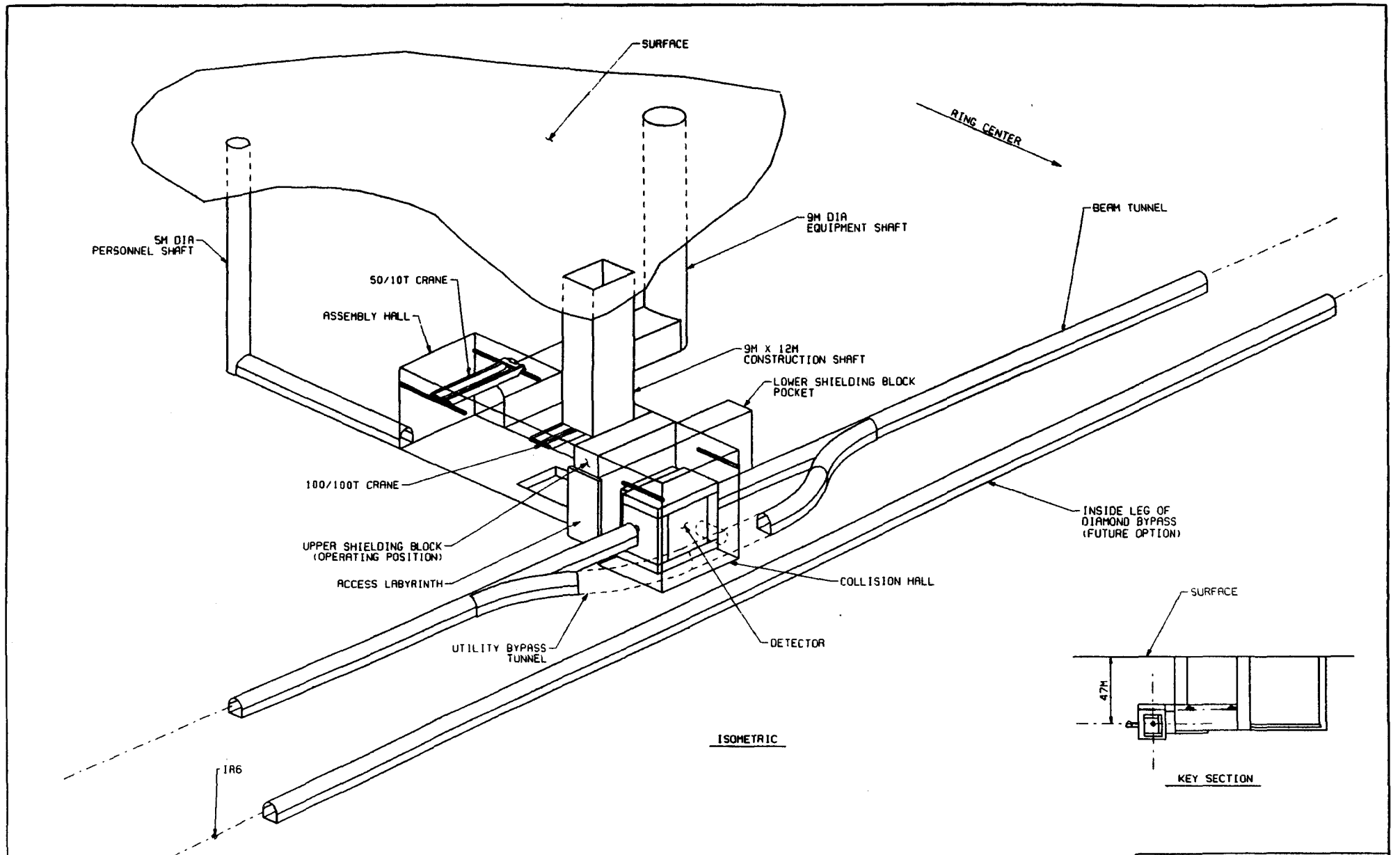

U. S. DEPARTMENT OF ENERGY
SUPERCONDUCTING SUPER COLLIDER

SSC LABORATORY

IR5 - DO UPGRADE
FINISHED HALL
ISOMETRIC

DRAWING IR5-01 | DATE | REV | DATE 12/5/88 | SHEET

NO	DATE	REVISION	REFERENCE DRAWINGS	NUMBER	NOTES

APPROVAL	DATE	SCALE	NONE	DATE
		DESIGN	M. HARVILL TERRY	
		DRAWN	M. NUNEZ	
		CHECKED		
		APPROVED		
		APPROVED		

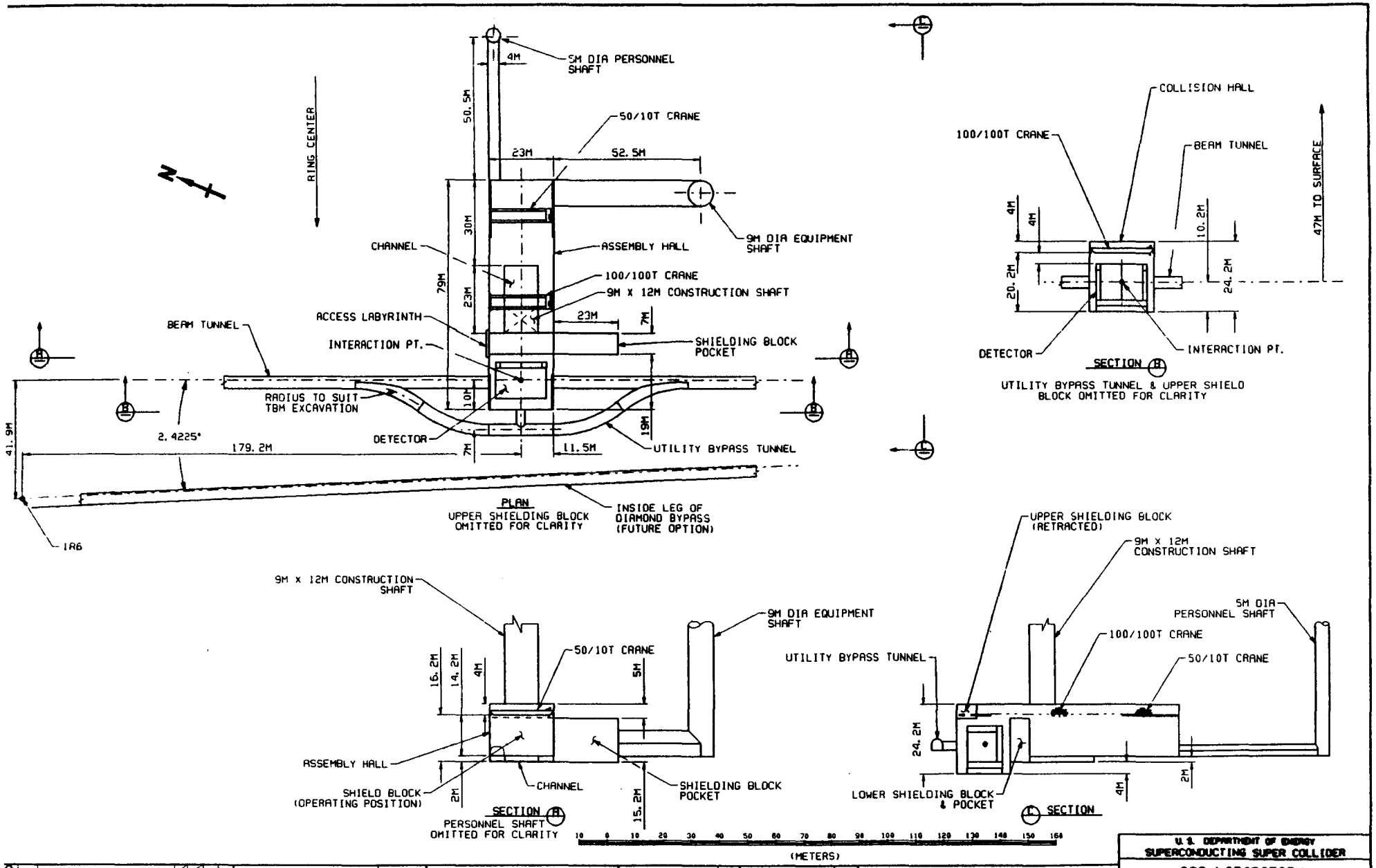
5M DIA PERSONNEL SHAFT
4M
50.5M
50/10T CRANE
23M
52.5M
RING CENTER
N
30M
9M DIA EQUIPMENT SHAFT
CHANNEL
ASSEMBLY HALL
79M
23M
100/100T CRANE
9M X 12M CONSTRUCTION SHAFT
23M
7M
ACCESS LABYRINTH
BEAM TUNNEL
INTERACTION PT.
SHIELDING BLOCK POCKET
RADIUS TO SUIT TBM EXCAVATION
10M
19M
41.9M
2.4225°
179.2M
DETECTOR
7M
11.5M
UTILITY BYPASS TUNNEL
PLAN
UPPER SHIELDING BLOCK OMITTED FOR CLARITY
INSIDE LEG OF DIAMOND BYPASS (FUTURE OPTION)
IR6
COLLISION HALL
100/100T CRANE
BEAM TUNNEL
47M TO SURFACE
4M
4M
10.2M
20.2M
24.2M
DETECTOR
INTERACTION PT.
SECTION
UTILITY BYPASS TUNNEL & UPPER SHIELD BLOCK OMITTED FOR CLARITY
9M X 12M CONSTRUCTION SHAFT
9M DIA EQUIPMENT SHAFT
50/10T CRANE
16.2M
14.2M
4M
5M
ASSEMBLY HALL
SHIELD BLOCK (OPERATING POSITION)
2M
CHANNEL
15.2M
SHIELDING BLOCK POCKET
SECTION
PERSONNEL SHAFT OMITTED FOR CLARITY
UPPER SHIELDING BLOCK (RETRACTED)
9M X 12M CONSTRUCTION SHAFT
5M DIA PERSONNEL SHAFT
100/100T CRANE
UTILITY BYPASS TUNNEL
50/10T CRANE
24.2M
LOWER SHIELDING BLOCK & POCKET
4M
2M
SECTION
10 0 10 20 30 40 50 60 70 80 90 100 110 120 130 140 150 160
(METERS)
U. S. DEPARTMENT OF ENERGY
SUPERCONDUCTING SUPER COLLIDER
SSC LABORATORY
IR6 - DO UPGRADE DETECTOR
FINISHED HALL
PLAN AND SECTIONS
DRAWING IR6-02
DATE
REV DATE 12/5/88
SHEET

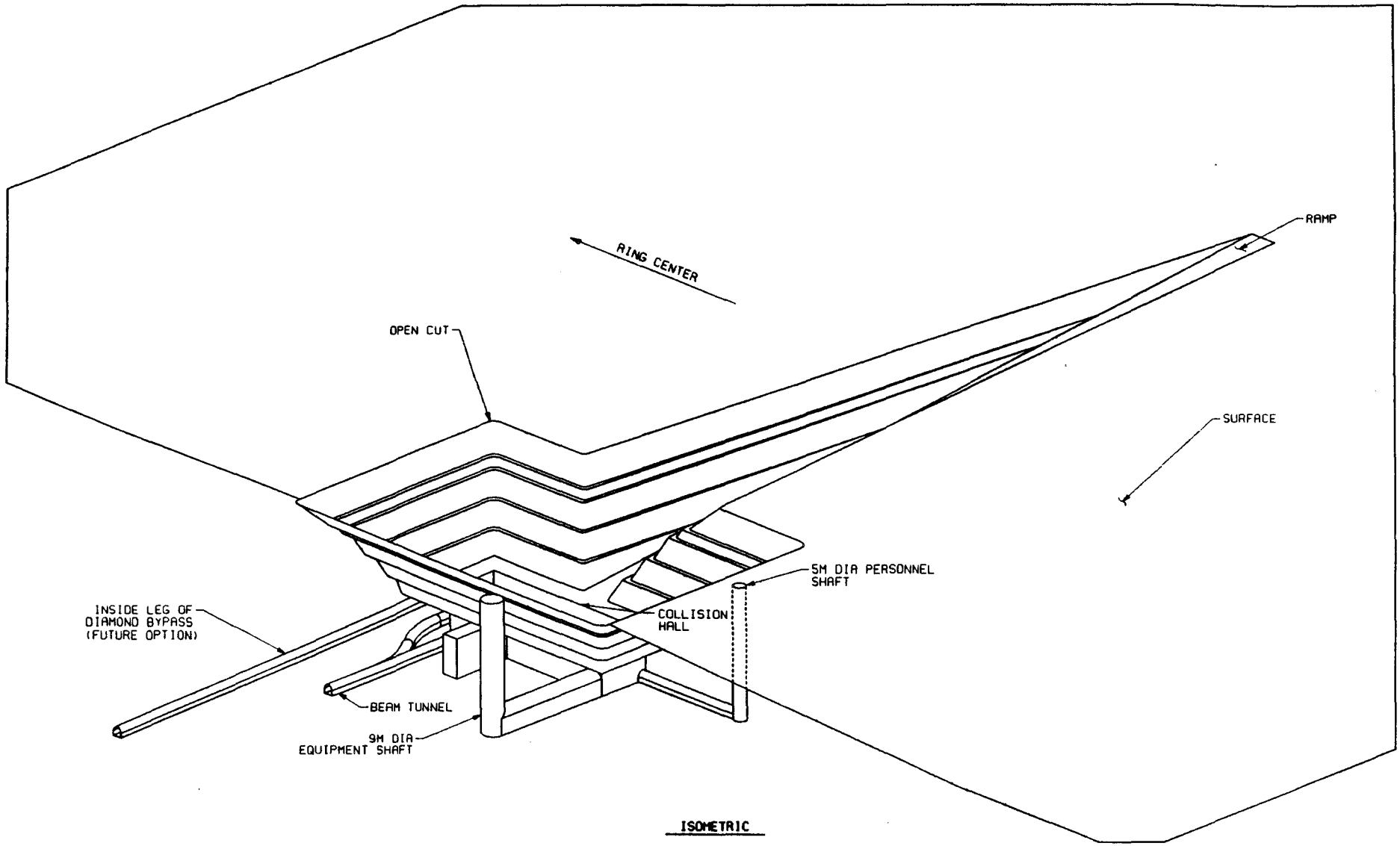

ISOMETRIC

NO	DATE	REVISION	BY	APP	APP	REFERENCE DRAWINGS	NUMBER	NOTES

APPROVAL	DATE	SCALE NONE	DATE
		DESIGN C. LAUGHTON	
		DRAWN R. WISTON	

U. S. DEPARTMENT OF ENERGY
SUPERCONDUCTING SUPER COLLIDER

SSC LABORATORY

IR5 - D0 UPGRADE DETECTOR
CUT AND COVER CONSTRUCTION
ISOMETRIC

DRAWING IR5-03 | DATE | REV 0 DATE 12/5/89 | SHEET

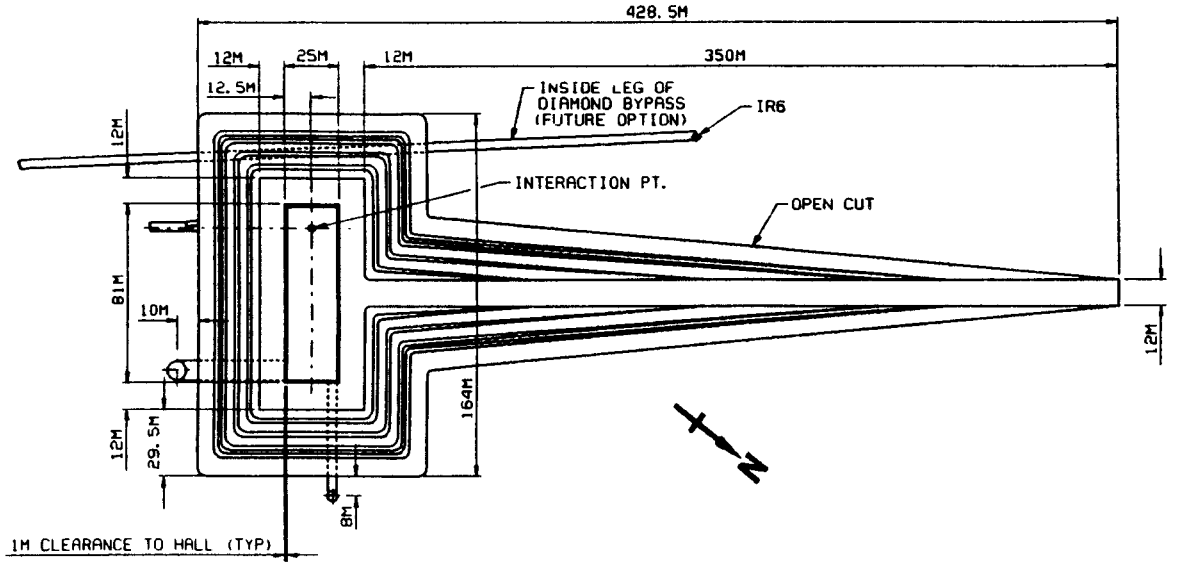

PLAN

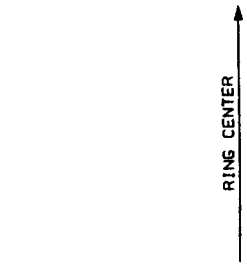

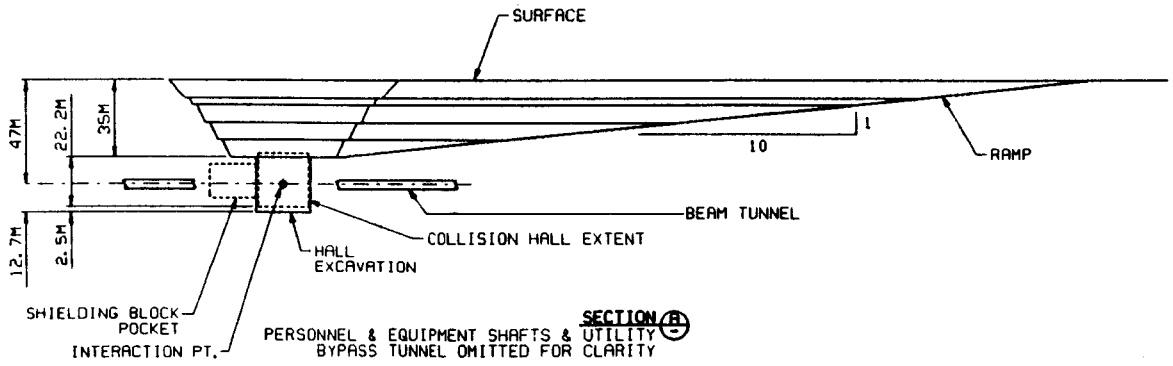

SECTION A

PERSONNEL & EQUIPMENT SHAFTS & UTILITY BYPASS TUNNEL OMITTED FOR CLARITY

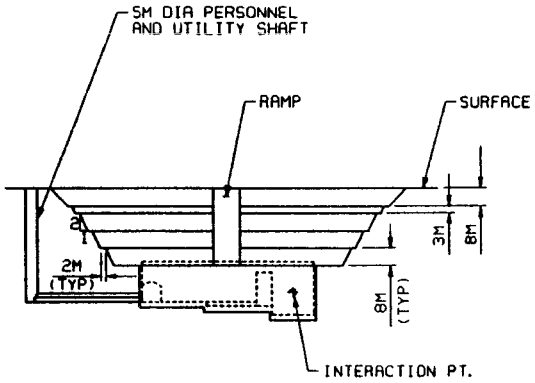

SECTION A

EQUIPMENT SHAFT & PORTION OF BYPASS TUNNEL DELETED FOR CLARITY

(METERS)

NO	DATE	REVISION				REFERENCE DRAWINGS	NUMBER	NOTES

APPROVAL	DATE	SCALE AS SHOWN	DATE

U. S. DEPARTMENT OF ENERGY
SUPERCONDUCTING SUPER COLLIDER

SSC LABORATORY

IR5 - D0 UPGRADE DETECTOR
CUT AND COVER CONSTRUCTION
PLAN AND SECTIONS

DRAWING IR5-04 | DATE | REV 0 DATE 12/5/89 | SHEET

TABLE OF WEIGHTS AND AREAS

COMPONENT	WEIGHT/MT	NO.	TOTAL/MT
CENTRAL CALORIMETER	350	1	350
ENDCAP CALORIMETER	450	2	900
CENTRAL CATCHER CALORIMETER	650	2	1300
ENDCAP CATCHER CALORIMETER	550	2	1100
CENTRAL TOROID	1925	1	1925
CENTRAL TOROID - DOOR	1440	2	2880
CENTRAL TOROID - ROOF	3055	1	3055
END TOROID	3500	2	7000
			18510

COMPONENT	NO.	TOTAL AREA/SQ M
MUON CHAMBERS	22	2809

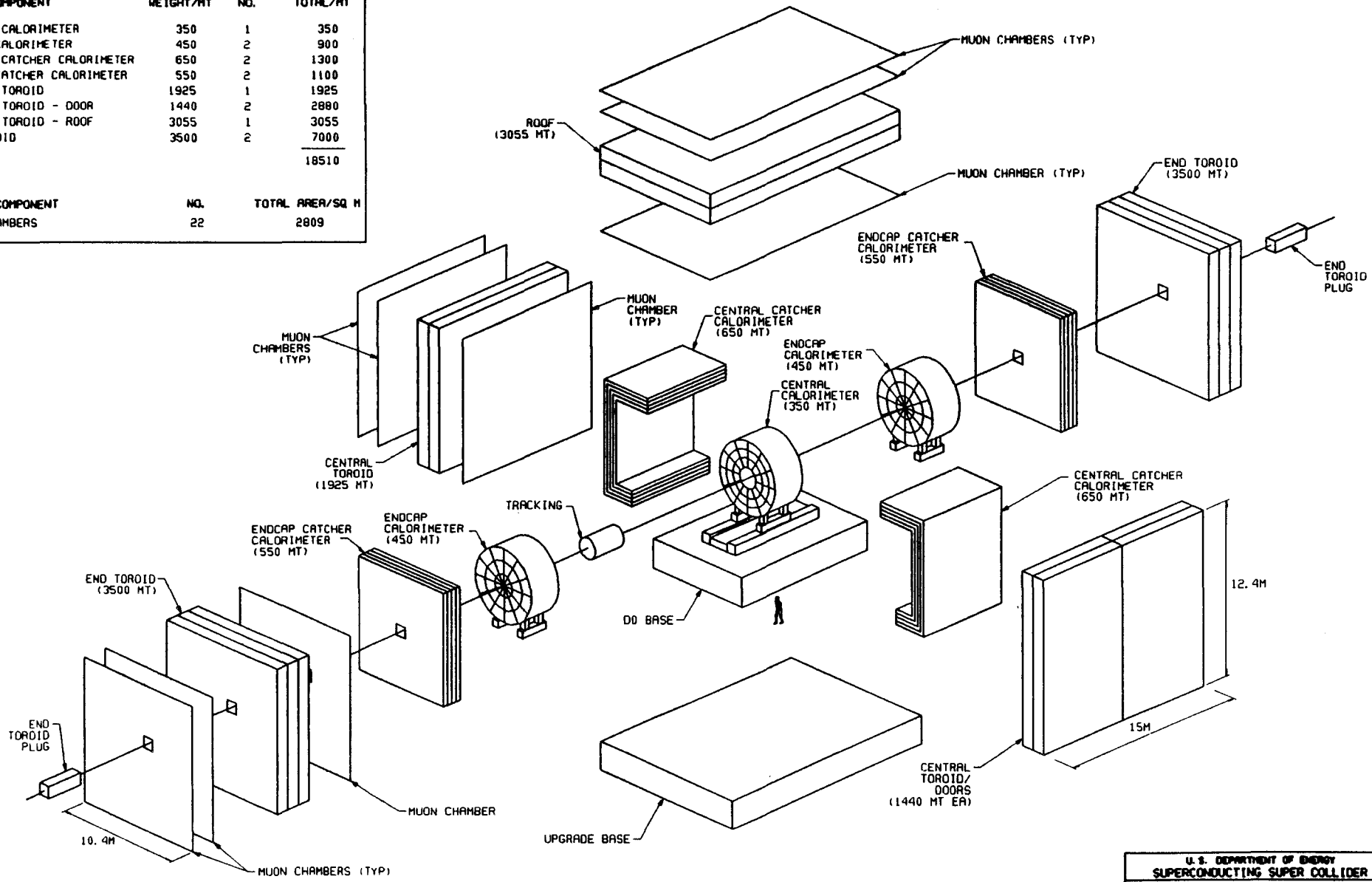

U.S. DEPARTMENT OF ENERGY
SUPERCONDUCTING SUPER COLLIDER

SSC LABORATORY

D0 UPGRADE DETECTOR
EXPLODED ISOMETRIC

DRAWING IA5-10 DATE 12/5/89 SHEET

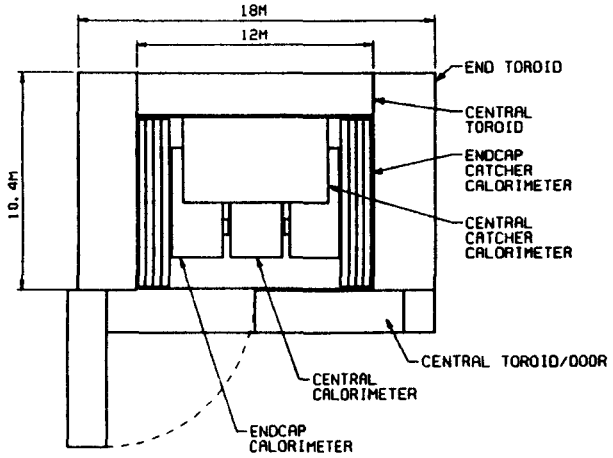

PLAN

(ROOF AND ONE CENTRAL CATCHER CALORIMETER REMOVED FOR CLARITY)

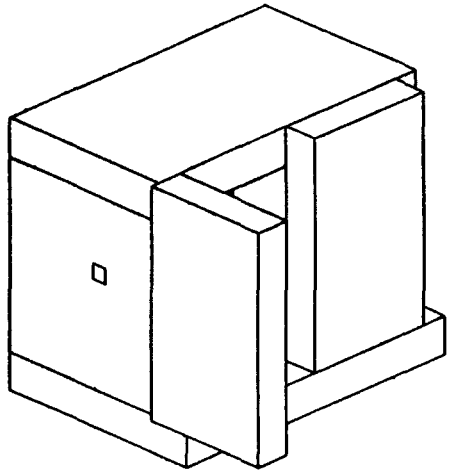

ISOMETRIC VIEW

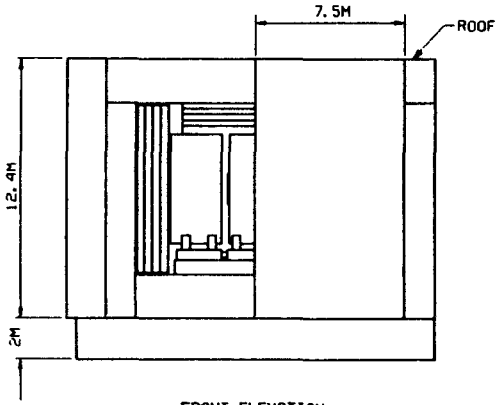

FRONT ELEVATION

(ONE CENTRAL CATCHER CALORIMETER REMOVED FOR CLARITY)

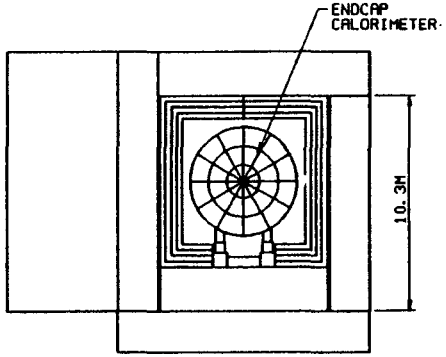

RIGHT ELEVATION

(END TOROID AND ENDCAP CATCHER CALORIMETER REMOVED FOR CLARITY)

10 0 10 20 30

(METERS)

NO	DATE	REVISION	BY	CHK	APP	APP	REFERENCE DRAWINGS	NUMBER	NOTES	APPROVAL	DATE

SCALE: AS SHOWN
DESIGN: R. HAN
DRAWN: HAMILTON

U.S. DEPARTMENT OF ENERGY
SUPERCONDUCTING SUPER COLLIDER

SSC LABORATORY

D0 UPGRADE DETECTOR
PLAN AND ELEVATIONS

DRAWING IRS-11 | DATE | REV DATE 12/5/89 | SHEET

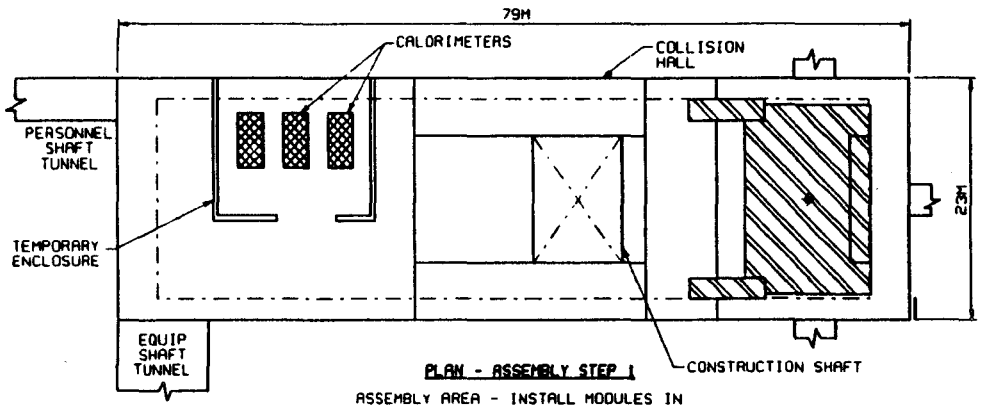

PLAN - ASSEMBLY STEP 1

ASSEMBLY AREA - INSTALL MODULES IN CALORIMETER SHELLS

COLLISION AREA - ASSEMBLE CENTRAL TOROID

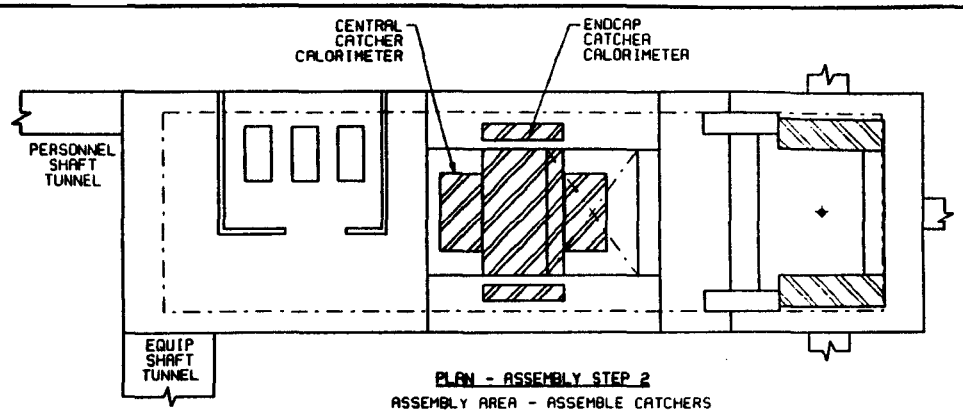

PLAN - ASSEMBLY STEP 2

ASSEMBLY AREA - ASSEMBLE CATCHERS

COLLISION AREA - ASSEMBLE END TOROIDS

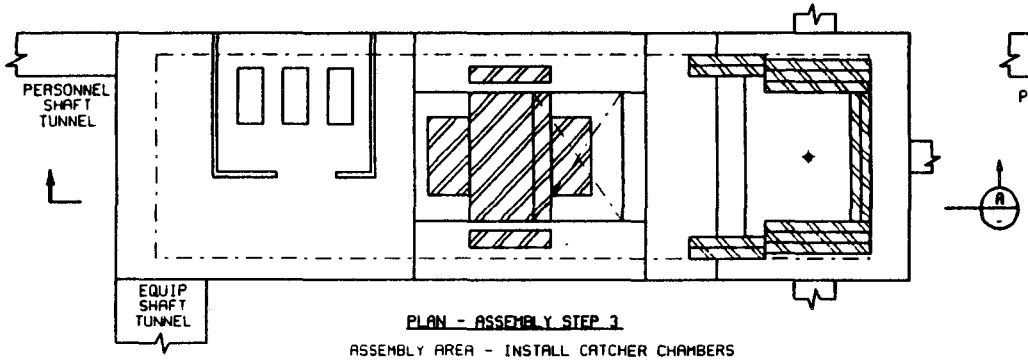

PLAN - ASSEMBLY STEP 3

ASSEMBLY AREA - INSTALL CATCHER CHAMBERS

COLLISION AREA - INSTALL AND ALIGN MUON CHAMBERS

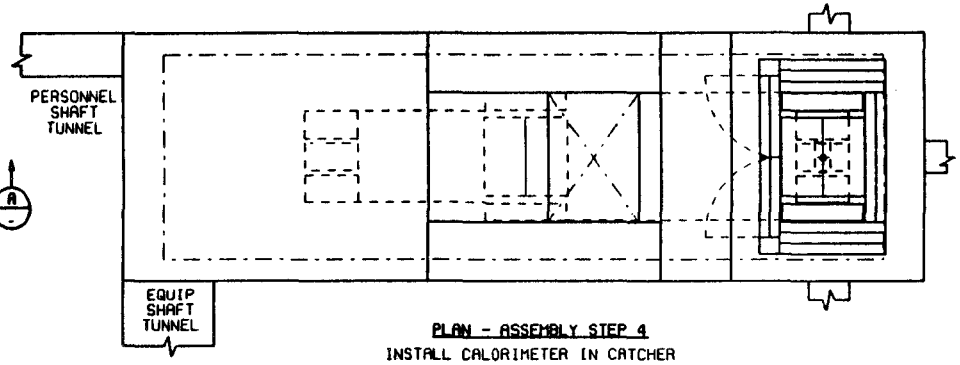

PLAN - ASSEMBLY STEP 4

INSTALL CALORIMETER IN CATCHER

MOVE CATCHER ASSEMBLY TO COLLISION AREA

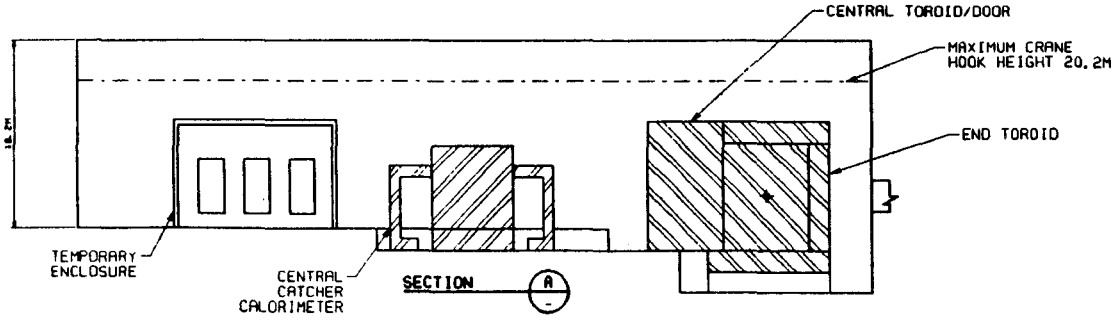

1. CROSS-HATCHING INDICATES COMPONENT UNDER CONSTRUCTION

NO	DATE	REVISION	REF	APP	REFERENCE DRAWINGS	NUMBER	NOTES

APPROVAL	DATE	SCALE	AS SHOWN	DATE
		DESIGNED		
		DR.		
		CHECKED	E. HAMILTON	
		APPROVED		

U.S. DEPARTMENT OF ENERGY
SUPERCONDUCTING SUPER COLLIDER

SSC LABORATORY

D0 UPGRADE DETECTOR

ASSEMBLY STEPS 1-4

DRAWING IA5-12 | DATE | REV 1 DATE 12/5/89 | SHEET

26U 1102.3 17M12.0040 2

MAKEI 05-DEC-1989 16:54

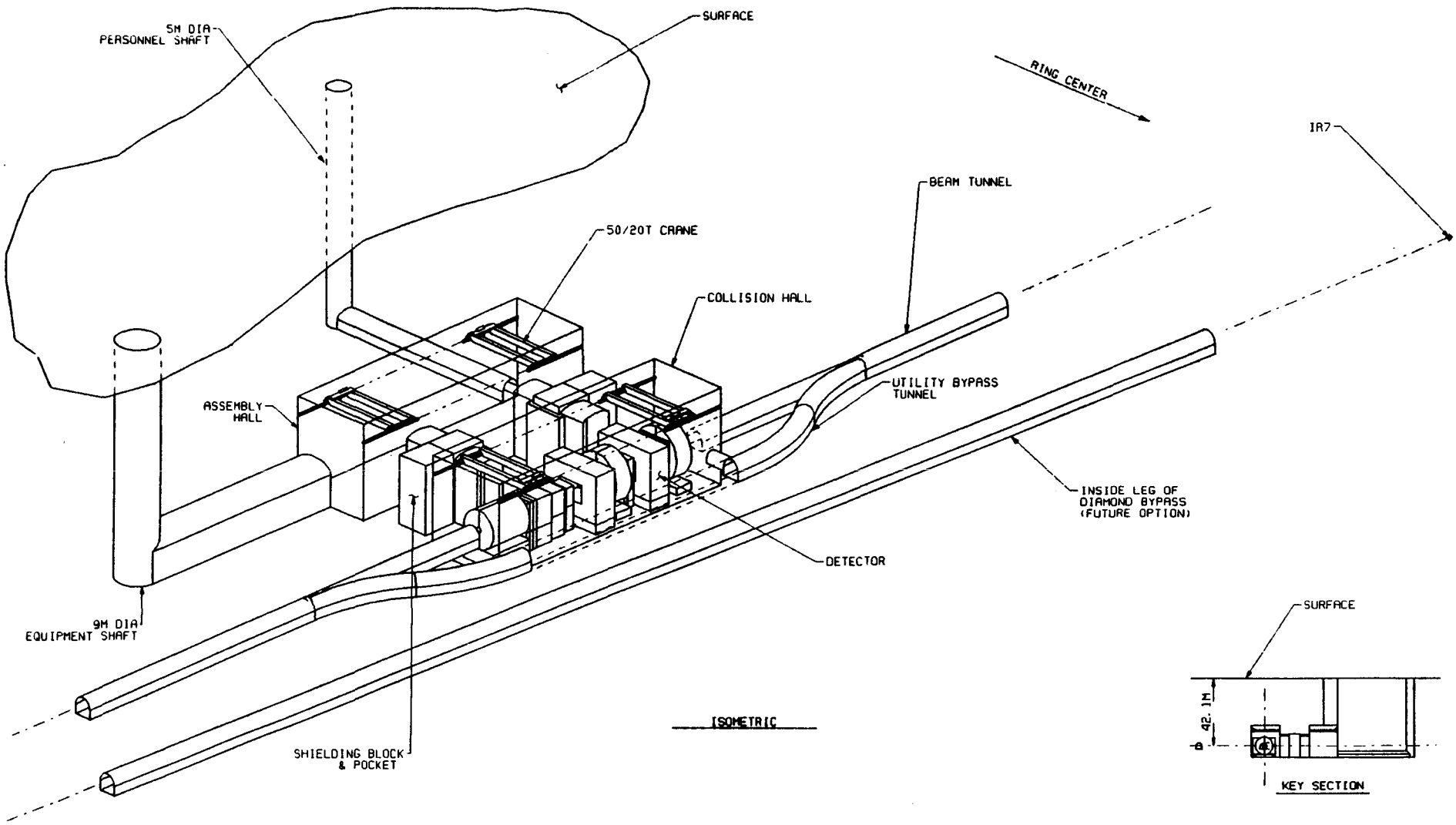

DATE	REVISION		APP	APP	REFERENCE DRAWINGS	NUMBER	NOTES

APPROVAL	DATE		NAME	DATE
		DESIGN	C. LAUGHTON	
		DRAWN	A. HANEI	
		CHECKED		
		APPROVED		
		APPROVED		

U. S. DEPARTMENT OF ENERGY
SUPERCONDUCTING SUPER COLLIDER

SSC LABORATORY

IR8 - BOTTOM COLLIDER DETECTOR
FINISHED HALL
ISOMETRIC

DRAWING IR8-01 | DATE | REV DATE 12/5/89 | SHEET

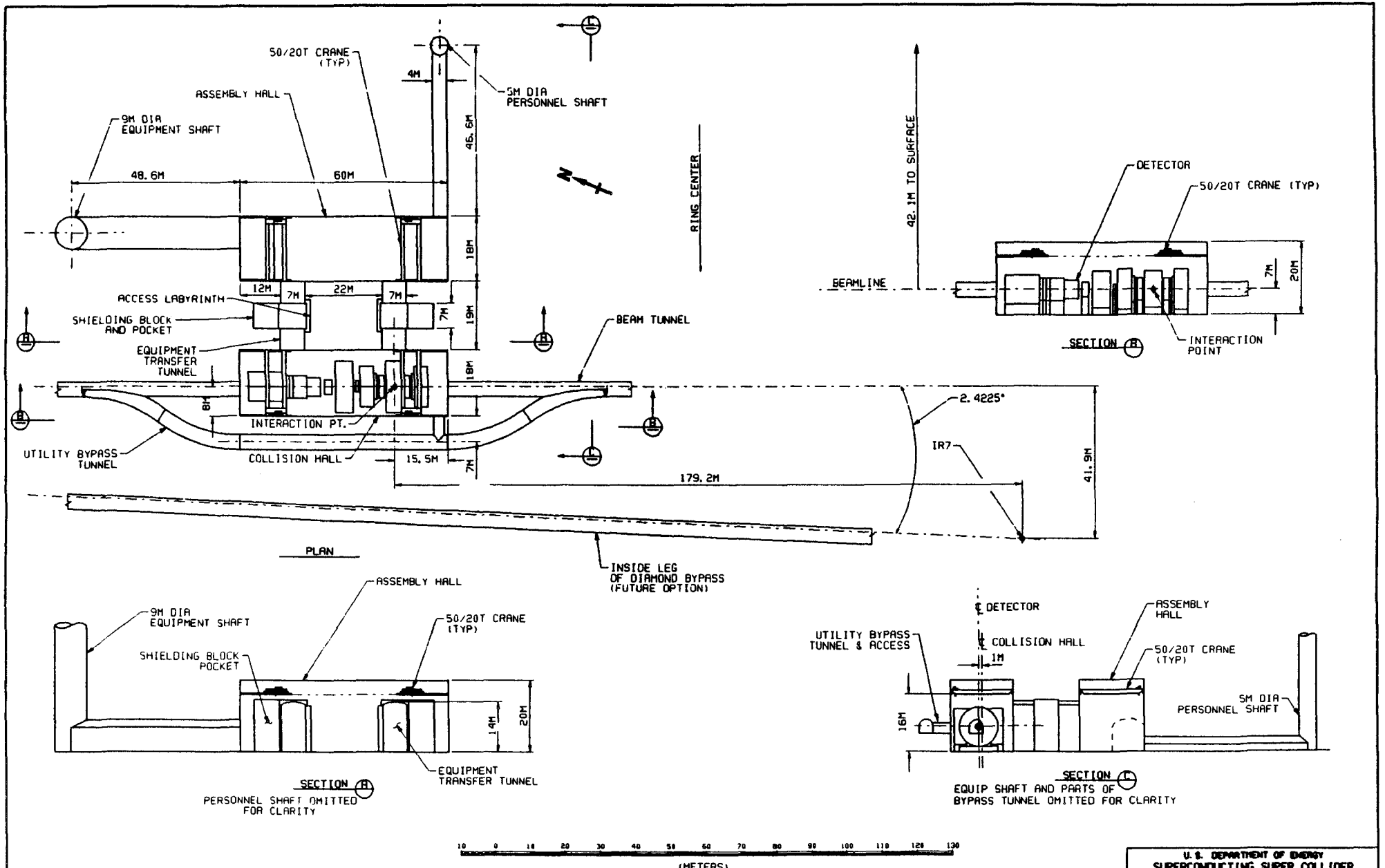

U.S. DEPARTMENT OF ENERGY
SUPERCONDUCTING SUPER COLLIDER

SSC LABORATORY

IR8 - BOTTOM COLLIDER DETECTOR
FINISHED HALL
PLAN AND SECTIONS

DRAWING IR8-02 | DATE | REV | DATE 12/5/89 | SHEET

NO	DATE	REVISION	REFERENCE DRAWINGS	NUMBER	NOTES

APPROVAL	DATE	SCALE AS SHOWN	DATE
		C. LAUGHTON	
		R. NUNEZ	

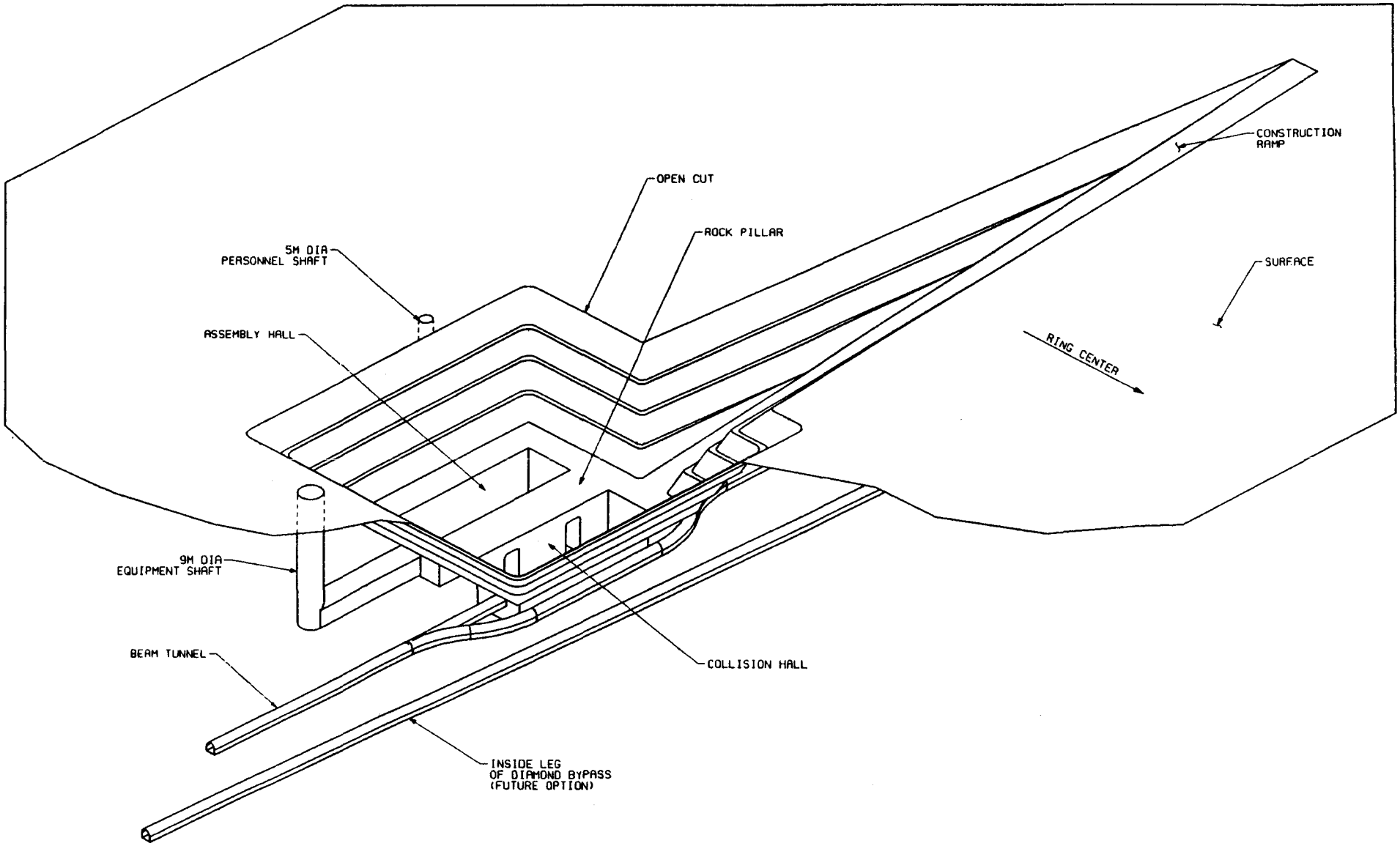

DATE	REVISION	REFERENCE DRAWINGS	NUMBER	NOTES

APPROVAL	DATE	SCALE NO SCALE	DATE
		C. LAUGHTON	
		A. NUNEZ	

U.S. DEPARTMENT OF ENERGY
SUPERCONDUCTING SUPER COLLIDER

SSC LABORATORY

IR8 - BOTTOM COLLIDER DETECTOR
CUT AND COVER CONSTRUCTION
ISOMETRIC

DRAWING IR8-u3 | DATE | REV 0 DATE 12/5/91 | SHEET

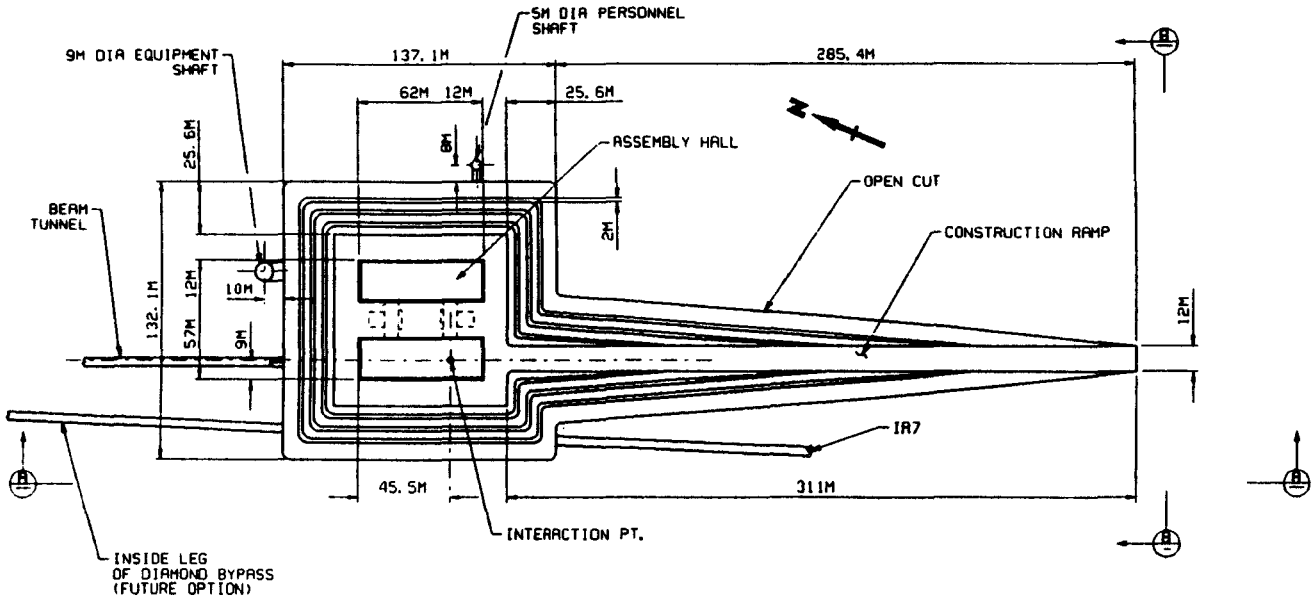

PLAN

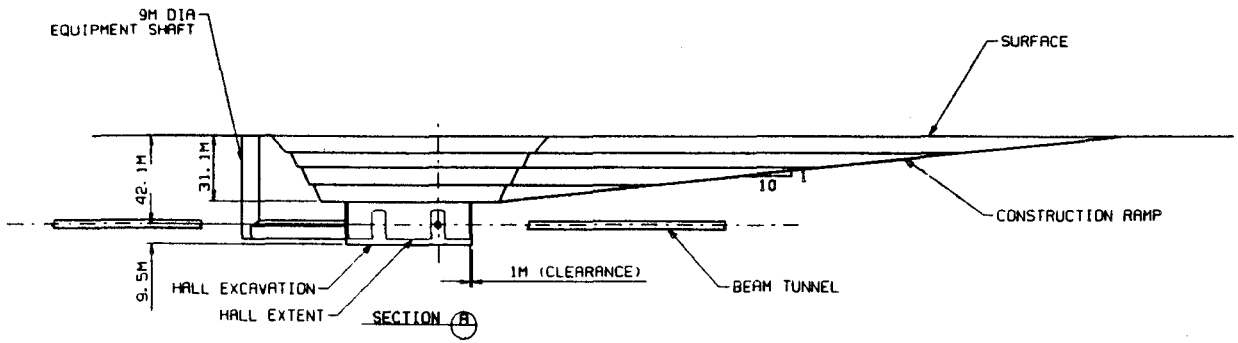

SECTION A

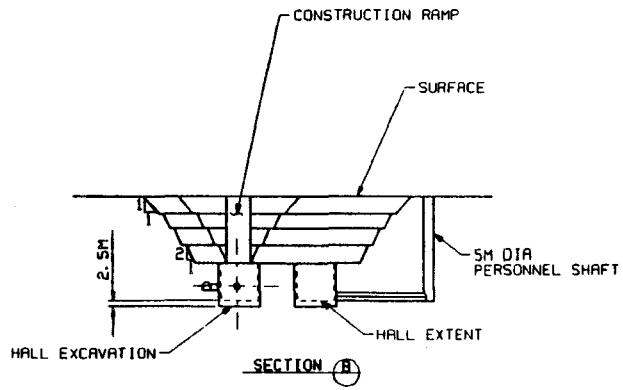

SECTION A

(METERS)

NO	DATE	REVISION	BY	CK	APP	APP	REFERENCE DRAWINGS	NUMBER	NOTES

APPROVAL	DATE	SCALE: AS SHOWN	DATE
		DRAWN C. LAUGHTON	
		CHK R. NUNEZ	

U.S. DEPARTMENT OF ENERGY
SUPERCONDUCTING SUPER COLLIDER

SSC LABORATORY

IR8 - BOTTOM COLLIDER DETECTOR
CUT AND COVER CONSTRUCTION
PLAN AND SECTIONS

DRAWING IR8-04 | DATE | REV 0 DATE 12/5/89 | SHEET

TABLE OF WEIGHTS

COMPONENT	WEIGHT/MT	NO.	TOTAL/MT
MAGNET 1	4500		4500
MAGNET 2	4500		4500
MUON STEEL 1'	650		650
MUON STEEL 1	650		650
MUON STEEL 2	1800		1800
EM 1'	55		55
EM 1	55		55
EM 2	75		75
			12285

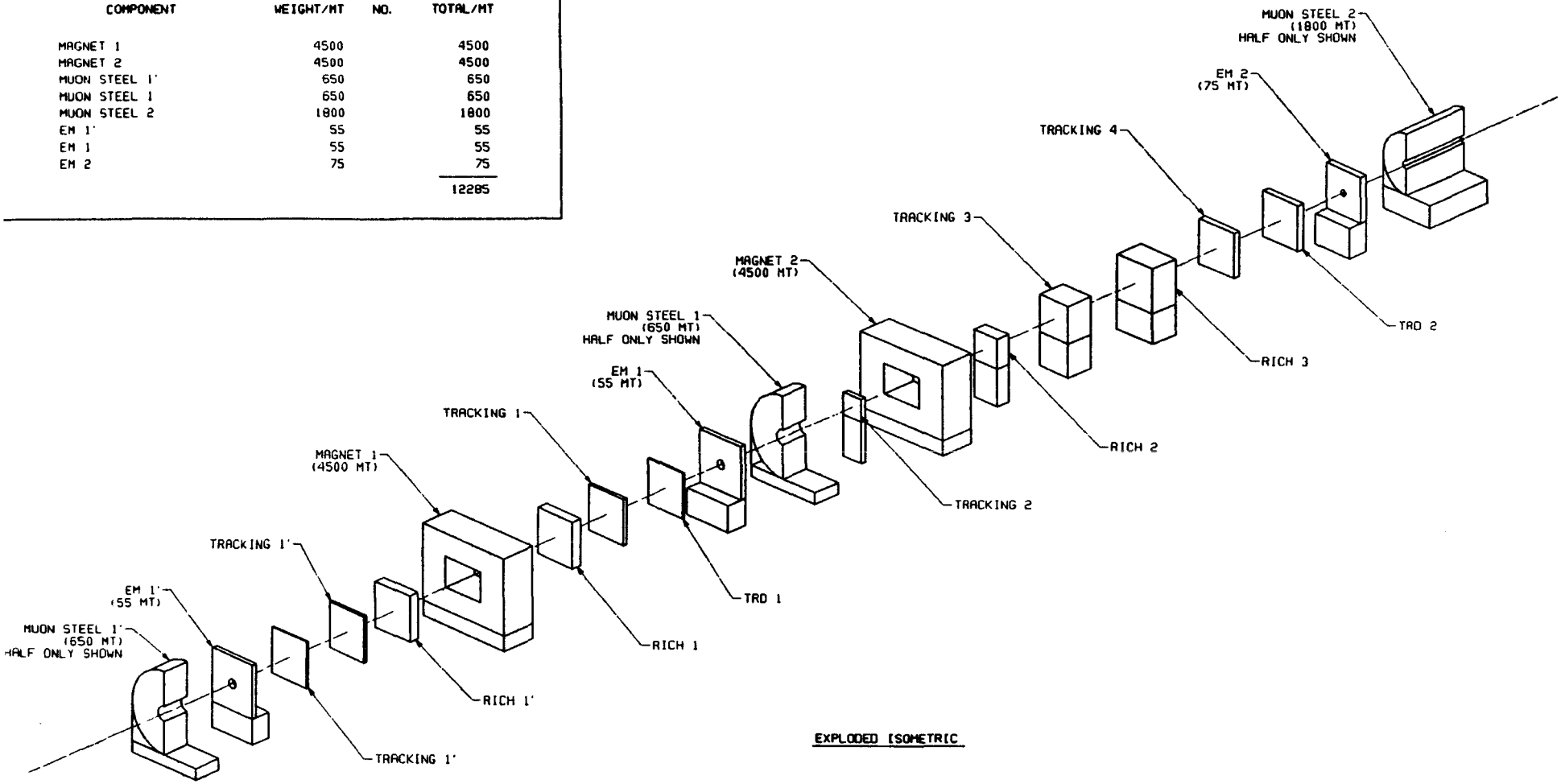

EXPLODED ISOMETRIC

NO	DATE	REVISION		APP	APP		REFERENCE DRAWINGS	NUMBER	NOTES

APPROVAL	DATE	SCALE	NO SCALE	DATE
		DRAWN	M. TERRY	
		CHK	R. NAMEZ	
		ENGR		
		PROJ		
		MANAGER		

U.S. DEPARTMENT OF ENERGY
SUPERCONDUCTING SUPER COLLIDER

SSC LABORATORY

BOTTOM COLLIDER DETECTOR
EXPLODED ISOMETRIC

DRAWING 1A8-10 | DATE | REV 1 DATE 12/5/89 | SHEET

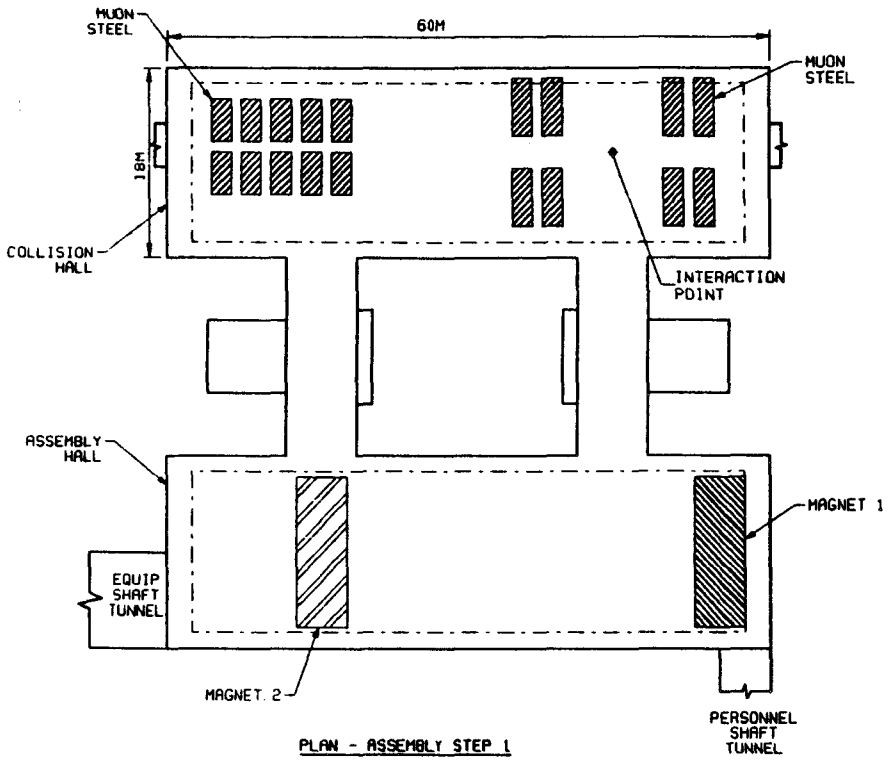

PLAN - ASSEMBLY STEP 1

ASSEMBLY HALL - ASSEMBLE MAGNETS 1 AND 2
COLLISION HALL - ASSEMBLE MUON STEEL

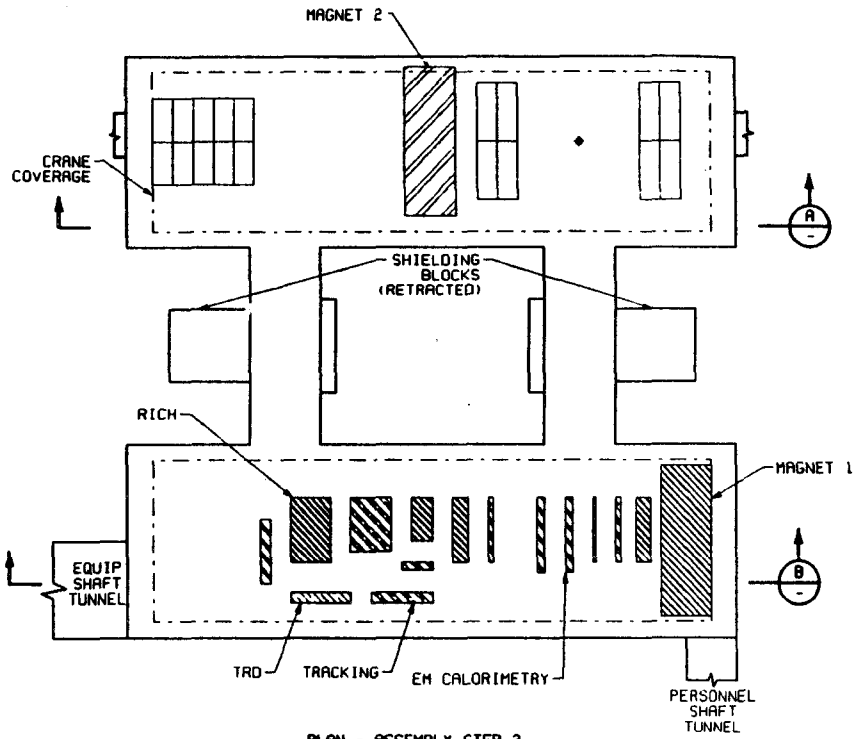

PLAN - ASSEMBLY STEP 2

ASSEMBLY HALL - ASSEMBLE CALORIMETER, TRACKING, ETC.
COLLISION HALL - INSTALL MAGNET 2

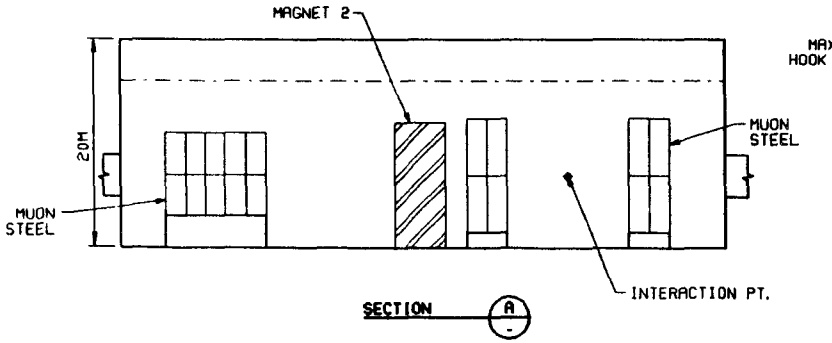

SECTION A

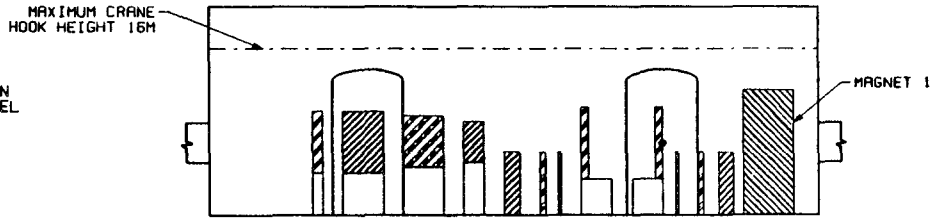

SECTION B

10 0 10 20 30 40 50 60
(METERS)

1. CROSS-HATCHING INDICATES COMPONENT UNDER CONSTRUCTION

APPROVAL	DATE			DATE
		DRAWN	AS SHOWN	
			V. TERRY	
			R. NUNEZ	

U.S. DEPARTMENT OF ENERGY
SUPERCONDUCTING SUPER COLLIDER

SSC LABORATORY

BOTTOM COLLIDER DETECTOR
ASSEMBLY STEPS 1 & 2

DRAWING IRB-12 | DATE | REV | DATE 12/5/89 | SHEET

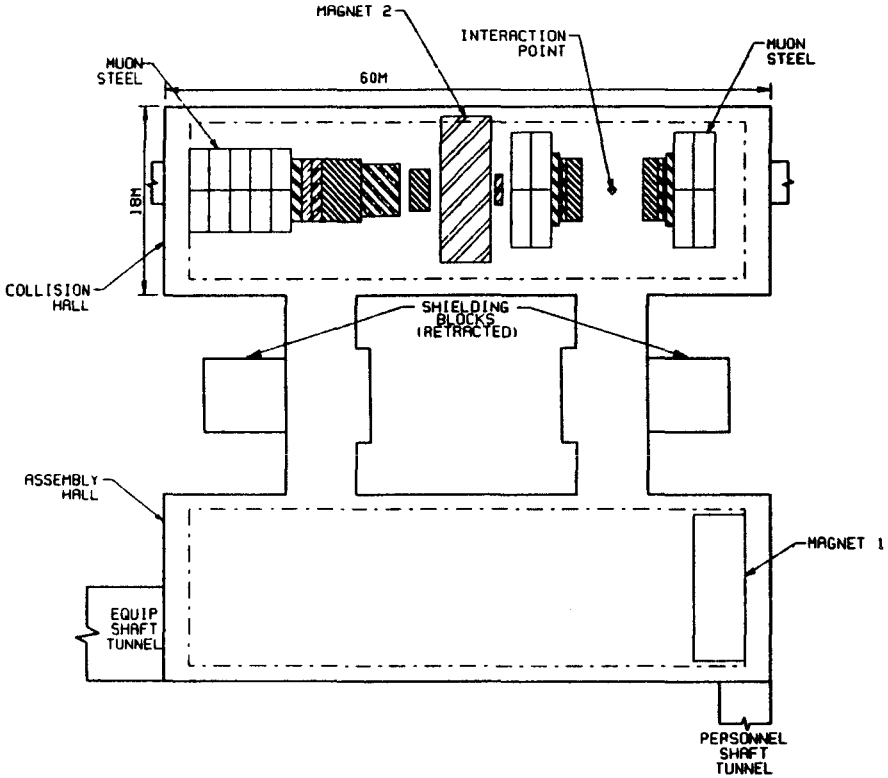

PLAN - ASSEMBLY STEP 3

COLLISION HALL - INSTALL CALORIMETER, TRACKING ETC.

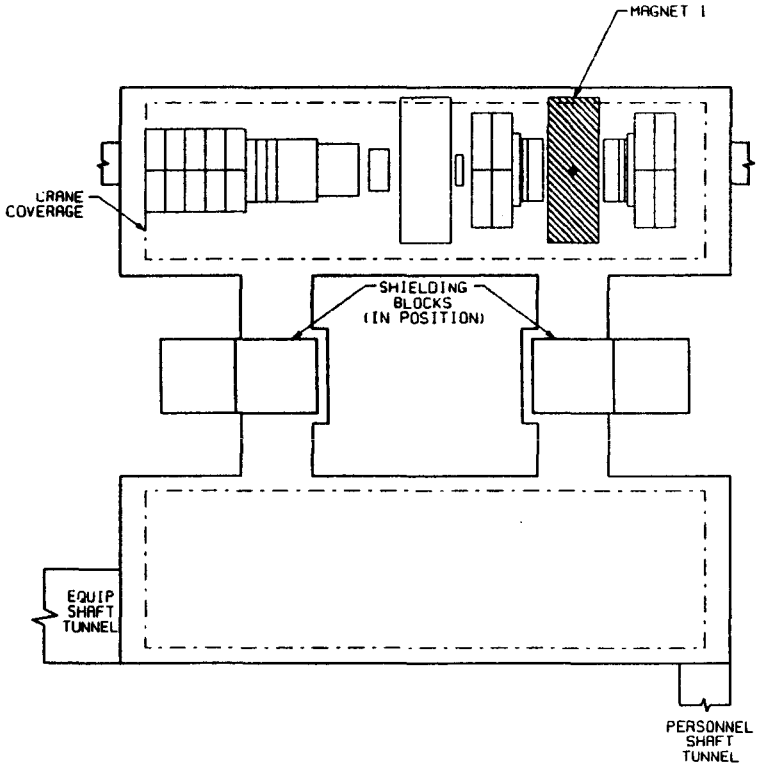

PLAN - ASSEMBLY STEP 4

INSTALL MAGNET 1

10 0 10 20 30 40 50 60

(METERS)

1. CROSS-HATCHING INDICATES COMPONENT UNDER CONSTRUCTION

U.S. DEPARTMENT OF ENERGY
SUPERCONDUCTING SUPER COLLIDER

SSC LABORATORY

BOTTOM COLLIDER DETECTOR
ASSEMBLY STEPS 3 & 4

DRAWING 1A8-13 DATE REV 1 SHEET

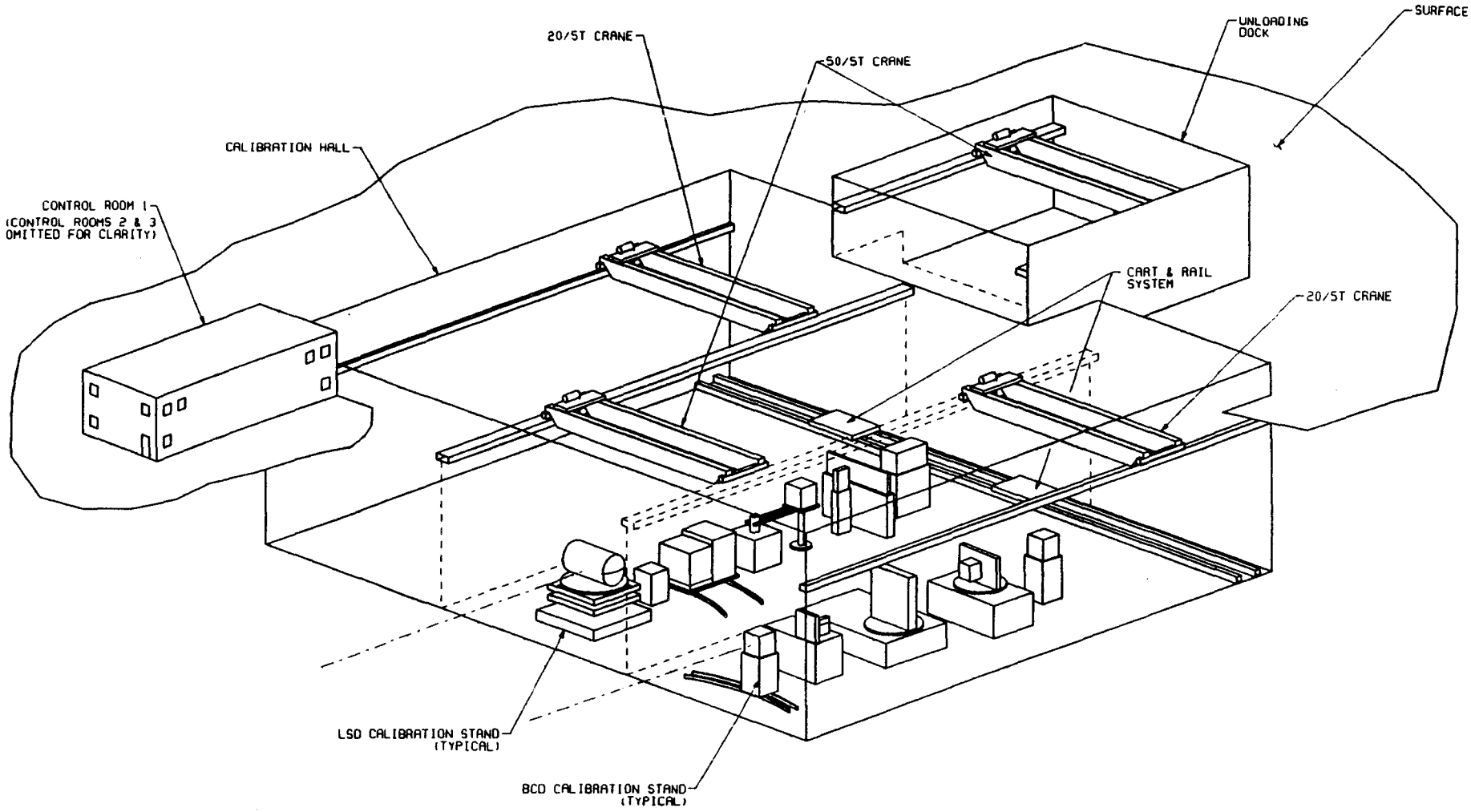

ISOMETRIC

BEAM TUNNELS OMITTED FOR CLARITY

U. S. DEPARTMENT OF ENERGY
SUPERCONDUCTING SUPER COLLIDER

SSC LABORATORY

CALIBRATION HALL
FINISHED HALL
ISOMETRIC

DRAWING CH-01 | DATE | REV | DATE 12/5/89 | SHEET

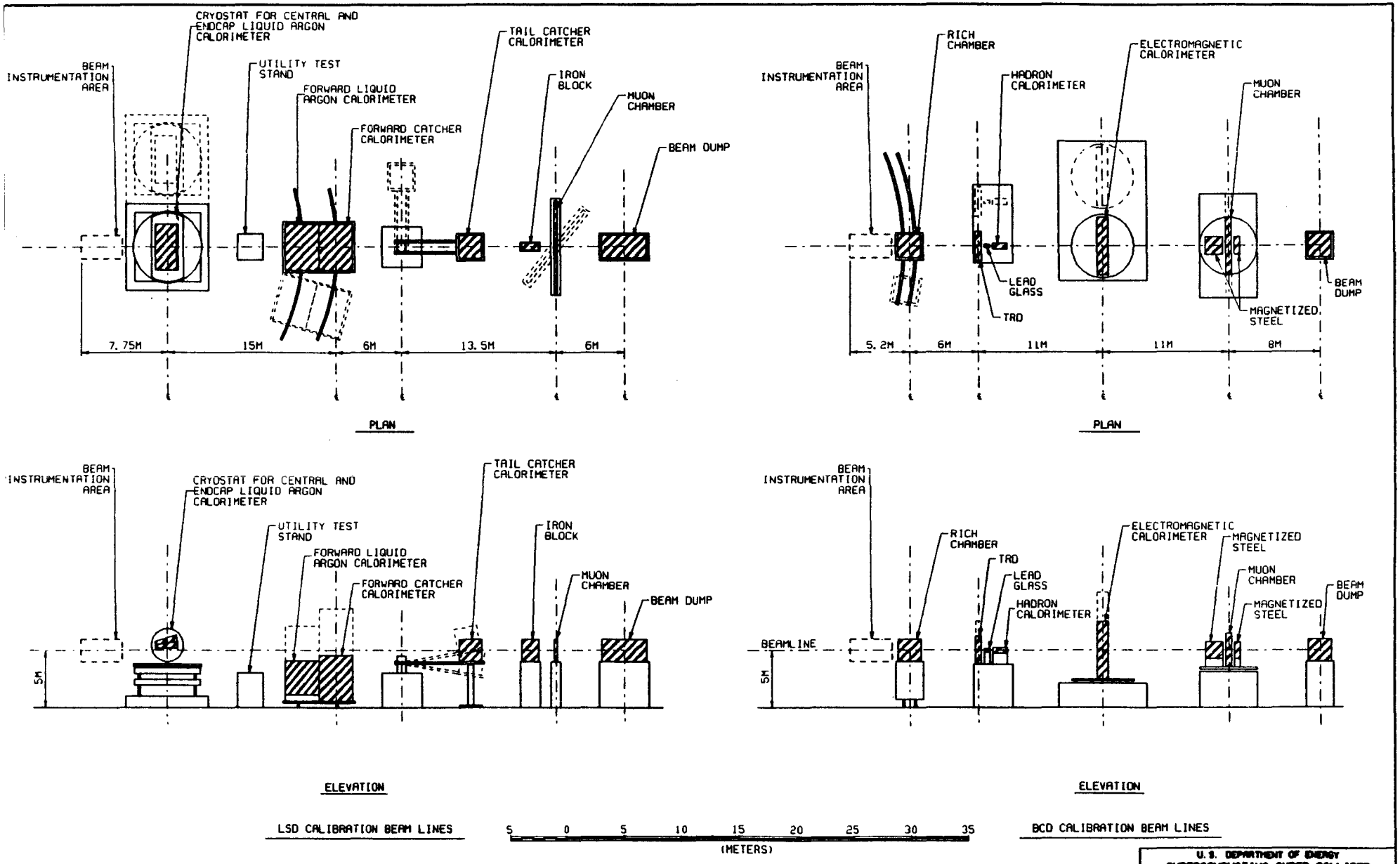
CRYOSTAT FOR CENTRAL AND ENDCAP LIQUID ARGON CALORIMETER
BEAM INSTRUMENTATION AREA
UTILITY TEST STAND
FORWARD LIQUID ARGON CALORIMETER
FORWARD CATCHER CALORIMETER
TAIL CATCHER CALORIMETER
IRON BLOCK
MUON CHAMBER
BEAM DUMP
7.75M
15M
6M
13.5M
6M
PLAN
BEAM INSTRUMENTATION AREA
RICH CHAMBER
HADRON CALORIMETER
ELECTROMAGNETIC CALORIMETER
MUON CHAMBER
LEAD GLASS
TRD
MAGNETIZED STEEL
BEAM DUMP
5.2M
6M
11M
11M
8M
PLAN
BEAM INSTRUMENTATION AREA
CRYOSTAT FOR CENTRAL AND ENDCAP LIQUID ARGON CALORIMETER
UTILITY TEST STAND
FORWARD LIQUID ARGON CALORIMETER
FORWARD CATCHER CALORIMETER
TAIL CATCHER CALORIMETER
IRON BLOCK
MUON CHAMBER
BEAM DUMP
5M
ELEVATION
BEAM INSTRUMENTATION AREA
RICH CHAMBER
TRD
LEAD GLASS
HADRON CALORIMETER
ELECTROMAGNETIC CALORIMETER
MAGNETIZED STEEL
MUON CHAMBER
MAGNETIZED STEEL
BEAM DUMP
BEAMLINE
5M
ELEVATION
LSD CALIBRATION BEAM LINES
5 0 5 10 15 20 25 30 35
(METERS)
BCD CALIBRATION BEAM LINES
U.S. DEPARTMENT OF ENERGY
SUPERCONDUCTING SUPER COLLIDER
SSC LABORATORY
CALIBRATION HALL
LSD & BCD CALIBRATION BEAM LINES
PLAN AND ELEVATION
DRAWING CH-63
DATE
SHEET

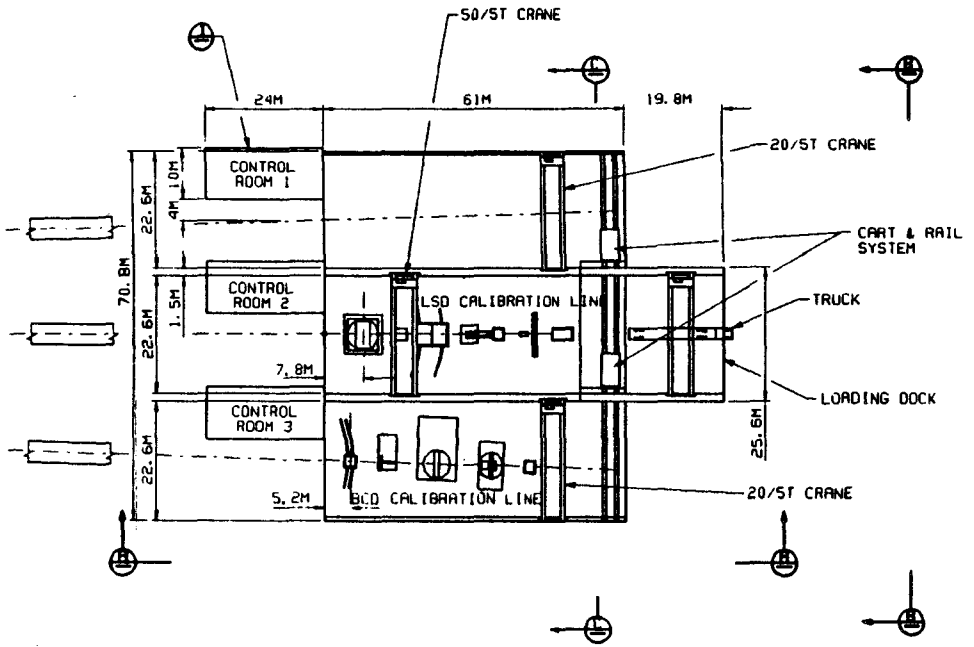

PLAN

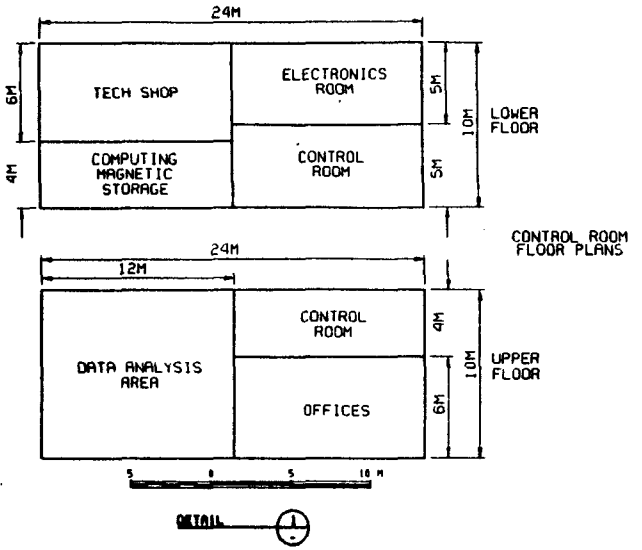

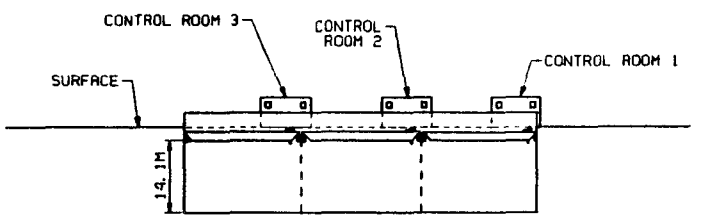

SECTION
CALIBRATION TEST STANDS OMITTED FOR CLARITY

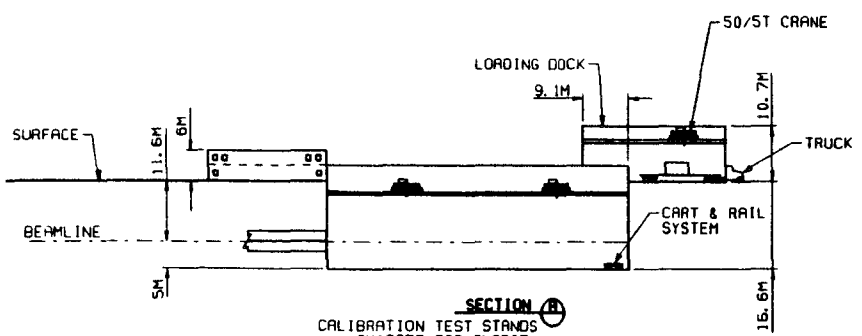

SECTION
CALIBRATION TEST STANDS OMITTED FOR CLARITY

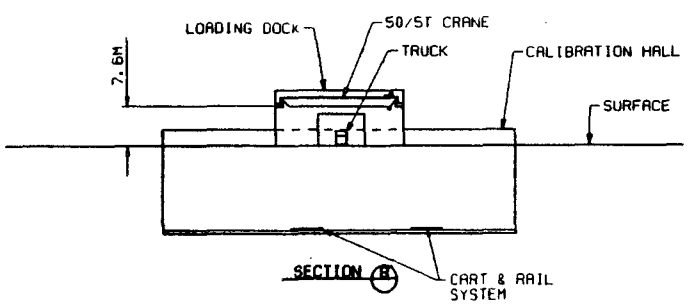

SECTION

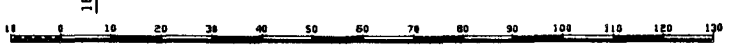

U.S. DEPARTMENT OF ENERGY
SUPERCONDUCTING SUPER COLLIDER

SSC LABORATORY

CALIBRATION HALL
FINISHED HALL
PLAN AND SECTIONS

DRAWING CH-02 | DATE | REV | DATE 12/5/89 | SHEET

NO	DATE	REVISION	REFERENCE DRAWINGS	NUMBER	NOTES

APPROVAL	DATE	SCALE AS SHOWN	DATE