SSCL-SR-1046

# The Superconducting Super Collider

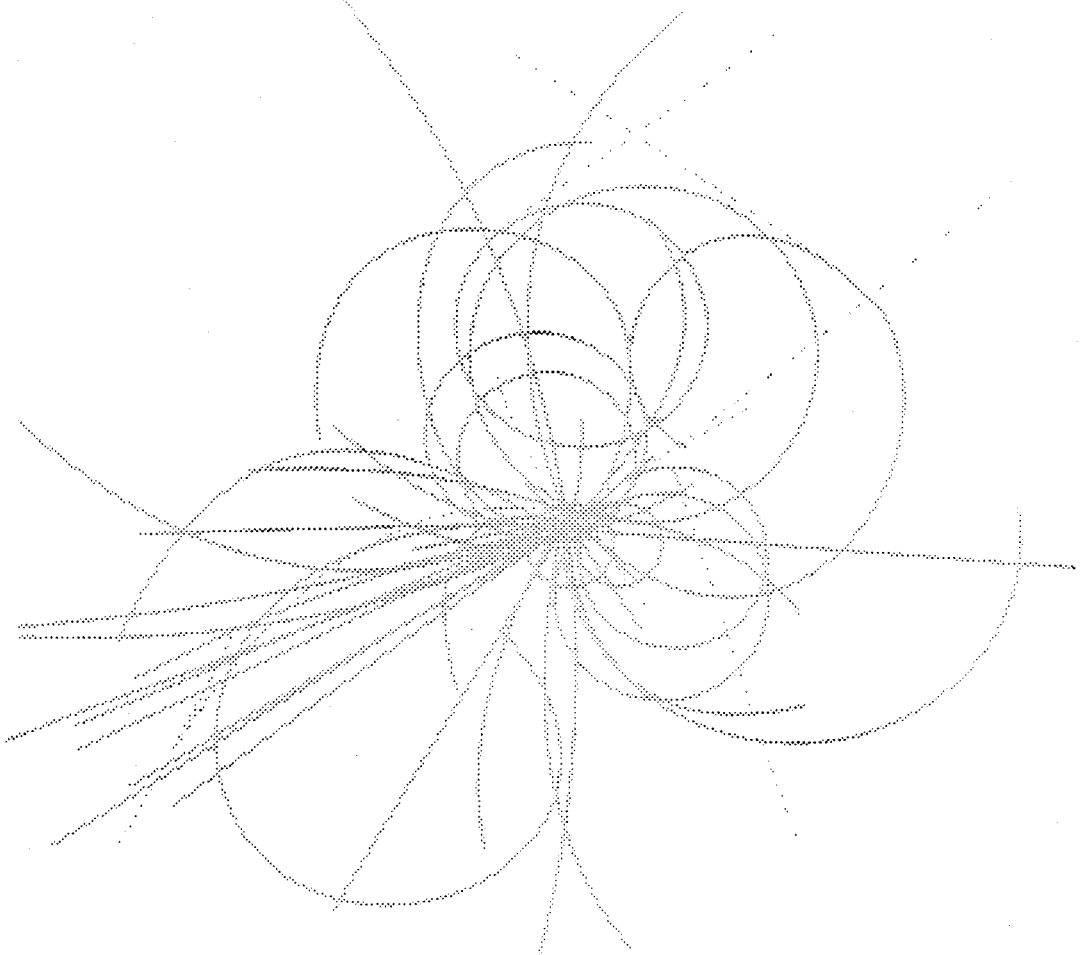

# Site-Specific Study Of SSC Support Facilities For Four Generic Detector Designs

SSC Laboratory

January 1990

SSCL-SR-1046

# SUPERCONDUCTING SUPER COLLIDER

# Site-Specific Study
## OF
# SSC Support Facilities
## FOR
# Four Generic Detector Designs

JULY 1989

*Reprinted by the SSC Laboratory, January 1990*

RTK

a joint venture

Kaiser Engineers, Inc.
Tudor Engineering Company
Keller & Gannon-Knight

**Prepared under DOE Contract DE-AC02-85ER40230**

# Site-Specific Study
## OF
# SSC Support Facilities
## FOR
# Four Generic Detector Designs


SCIENTIFIC COORDINATOR
**Michael Marx**

TECHNICAL EDITOR
**Erica Atkin**

CONTRIBUTORS
**A. Autin, P. Dahl, C. Laughton, O. Orban, T. Toohig**
**SSC Construction Coordination Group**
**SSC Laboratory**
**2550 Beckleymeade Avenue, Suite 260**
**Dallas, Texas 75237**

**W. Ekren, S. Hamilton, A. Nunez, M. Riddle,**
**D. Scapuzzi, S. Singh, W. Terry**
**RTK**
**1800 Harrison Street**
**Oakland, California 95623**

**R. Stefanski**
**FNAL**
**P.O. Box 500**
**Batavia, Illinois 60510**


JULY 1989


**Prepared under DOE Contract DE-AC02-85ER40230**

# CONTENTS

CHAPTER 1: INTRODUCTION....1
1.1 Background and Goals of the Study....1
1.2 The Texas Site and SSC Layout....2
1.3 Organization of the Study....2

CHAPTER 2: INTEGRATED DETECTOR / FACILITY MODEL SCHEDULES....5
2.1 Introduction to the Model Schedules....5
2.2 Preconstruction Cluster Schedules....6
2.3 Relations Between Topical Schedules....7
2.4 The Integrated Schedules....10

CHAPTER 3: THE GENERIC SSC EXPERIMENTAL PROGRAM....19
3.1 Large Solenoid Detector Model (LSD)....20
3.2 Bottom Collider Detector Model (BCD)....25
3.3 Upgraded DØ Detector Model....28
3.4 Nonmagnetic Detector Model (NMD)....31

CHAPTER 4: CONSTRUCTION SCENARIOS....35
4.1 Introduction and Site Overview....35
4.2 Site Subsurface and Surface Features....35
4.3 Main Geotechnical Support Criteria....36
4.3.1 Topsoil / Weathered-Rock Support Considerations....36
4.3.2 Rock Support Considerations....36
4.3.3 Ground Monitoring....37
4.4 Construction Sequences....37
4.4.1 Cut-and-Cover Construction....38
4.4.2 K1 Cavern Options....39

CHAPTER 5: SURFACE FACILITIES....41
5.1 Introduction....41
5.2 Construction of Surface Facilities....41
5.3 Construction Schedule....43
5.4 Design Issues....44
5.5 Construction Logistics....44
5.6 Surface Buildings....46
5.6.1 Construction and Preassembly Facilities....46
5.6.2 Shop Building....48
5.6.3 Utilities Center and Compressor Building....48
5.6.4 Operations Center....48
5.6.5 Access and Control Buildings....49
5.7 Parking Lots, Roads, Landscaping....49

CHAPTER 6: SITE-SPECIFIC MODEL OF FACILITIES AND EXPERIMENTS....51
6.1 Introduction....51
6.2 K-1 Interaction Region
Large Solenoid Detector (LSD)....52
6.2.1 General Description....52
6.2.2 Collision Hall....52
6.2.3 Shafts and Tunnels....53
6.2.4 Cranes....54
6.2.5 Transfer Carts....54
6.2.6 Construction Features....55
6.2.7 Superstructure....55
6.2.8 K-1 Surface Site Facilities....55
6.2.9 Detector Assembly Sequence....59

6.2.10 Options for K-1 Hall ..... 60
6.2.11 K-1 Model Schedules ..... 62
6.3 Interaction Region K2
Nonmagnetic Detector (NMD) ..... 63
6.3.1 General Description ..... 63
6.3.2 Collision Hall ..... 64
6.3.3 Assembly Hall ..... 64
6.3.4 Shafts and Tunnels ..... 64
6.3.5 Equipment Transfer Tunnels and Shielding ..... 65
6.3.6 Cranes ..... 65
6.3.7 Construction Features ..... 66
6.3.8 K-2 Surface Site Facilities ..... 66
6.3.9 Assembly Sequence ..... 69
6.3.10 K-2 Model Schedules ..... 70
6.4 Interaction Region K5
Bottom Collider Detector (BCD) ..... 71
6.4.1 General Description ..... 71
6.4.2 Collision Hall ..... 72
6.4.3 Assembly Hall ..... 72
6.4.4 Shafts and Tunnels ..... 72
6.4.5 Equipment Transfer Tunnels and Shielding ..... 73
6.4.6 Cranes ..... 73
6.4.7 Construction Features ..... 73
6.4.8 K5 Surface Facilities ..... 74
6.4.9 Assembly Sequence ..... 75
6.4.10 K5 Model Schedules ..... 78
6.5 Interaction Region K6
DØ Upgrade Detector ..... 80
6.5.1 General Description ..... 80
6.5.2 Collision/Assembly Hall ..... 81
6.5.3 Shafts and Tunnels ..... 81
6.5.4 Cranes ..... 82
6.5.5 Construction Features ..... 82
6.5.6 K6 Surface Site Facilities ..... 82
6.5.7 Assembly Sequence ..... 85
6.5.8 K6 Model Schedules ..... 87

CHAPTER 7: CONCLUSIONS ..... 115

APPENDIX: DRAWINGS ..... 121

# LIST OF FIGURES, TABLES, AND SCHEDULES

CHAPTER 1: INTRODUCTION....1

Figure 1-1. The SSC site in Ellis, Texas....2a
Figure 1-2. The SSC ring, showing layout of experimental facilities....3

CHAPTER 2: INTEGRATED DETECTOR / FACILITY MODEL SCHEDULES....5

Figure 2-1. Start-up relationships for experimental area construction....8
Figure 2-2. Dependency relationships between civil and detector construction....9

Schedule K1/2-PC. Preconstruction schedule for the near cluster....11
Schedule K5/6-PC. Preconstruction schedule for the far cluster....12
Schedule K1-1. Hall construction (open cut)....13
Schedule K1-2. Surface construction....14
Schedule K1-3. K1 detector (LSD)....15
Schedule K1-4. Summary of model schedule of K1 development....17

CHAPTER 3: THE GENERIC SSC EXPERIMENTAL PROGRAM....19

Figure 3-1. Major components of the Large Solenoid Detector....22
Figure 3-2. End view of the Large Solenoid Detector....22
Figure 3-3. Calorimeter of the Large Solenoid Detector, with man for scale....23
Figure 3-4. The Bottom Collider Detector....26
Figure 3-5. The Upgraded DØ Detector....29
Figure 3-6. The Nonmagnetic Detector....32

Table 3-1. Dimensions of the Large Solenoid Detector....21
Table 3-2. Dimensions of the Bottom Collider Detector....25
Table 3-3. Dimensions of the DØ Upgrade Detector....28
Table 3-4. Dimensions of the Nonmagnetic Detector....31

CHAPTER 4: CONSTRUCTION SCENARIOS....35

Table 4-1. Task Durations for Underground Construction (Days)....39

CHAPTER 5: SURFACE FACILITIES....41

Figure 5-1. Aerial view of site K2 plan....42
Figure 5-2. K5 office, construction, and preassembly building....44
Figure 5-3. K1 construction plan....45
Figure 5-4. Shop building....46
Figure 5-5. Utilities center and compressor building....47
Figure 5-6. Office building....48

Table 5-1. Parameters of the Interaction Regions....43

CHAPTER 6: SITE-SPECIFIC MODEL OF FACILITIES AND EXPERIMENTS.....51

Figure 6-1. K1 surface activities flow.....57
Figure 6-2. K1 surface facilities organization.....58
Figure 6-3. K1 LSD experiment.....58
Figure 6-4. K2 surface activities flow.....68
Figure 6-5. K2 surface facilities organization.....68
Figure 6-6. K2 NMD experiment.....69
Figure 6-7. K5 surface activities flow.....76
Figure 6-8. K5 surface facilities organization.....77
Figure 6-9. K5 BCD experiment.....78
Figure 6-10. K6 surface activities flow.....84
Figure 6-11. K6 surface facilities organization.....85
Figure 6-12. K6 DØ upgrade experiment.....86

Table 6-1. K1 Surface Facilities Parameters.....56
Table 6-2. K2 Surface Facilities Parameters.....67
Table 6-3. K5 Surface Facilities Parameters.....75
Table 6-4. K6 Surface Facilities Parameters.....83

Schedule K1-1. Hall construction (open cut).....88
Schedule K1-2. Surface construction.....89
Schedule K1-3. K1 detector (LSD).....90
Schedule K1-4. Summary of model schedule of K1 development.....92
Schedule K1-5. Critical path for LSD w/o considering building availability.....93
Schedule K1-6. Critical path for LSD considering building availability.....94

Schedule K2-1. Hall construction (open cut).....95
Schedule K2-2. Surface construction.....96
Schedule K2-3. K2 detector (NMD).....97
Schedule K2-4. Summary of model schedule of K2 development.....99
Schedule K2-5. Critical path for NMD w/o considering building availability.....100
Schedule K2-6. Critical path for NMD considering building availability.....101

Schedule K5-1. Hall construction (open cut).....102
Schedule K5-2. Surface construction.....103
Schedule K5-3. K5 detector (BCD).....104
Schedule K5-4. Summary of model schedule of K5 development.....106
Schedule K5-5. Critical path for BCD w/o considering building availability.....107
Schedule K5-6. Critical path for BCD considering building availability.....108

Schedule K6-1. Hall construction (open cut).....109
Schedule K6-2. Surface construction.....110
Schedule K6-3. K6 detector (DØ).....111
Schedule K6-4. Summary of model schedule of K6 development.....112
Schedule K6-5. Critical path for DØ w/o considering building availability.....113
Schedule K6-6. Critical path for DØ considering building availability.....114

CHAPTER 7: CONCLUSIONS.....115

Schedule 7-1. Summary of model schedule of K1 development.....118
Schedule 7-2. K1 summary w/start based on LOI.....119
Schedule 7-3. K1 summary w/o dependencies on local surface facilities.....120

# CHAPTER 1

# INTRODUCTION

## 1.1 Background and Goals of the Study

This report builds on a three-year effort at the Superconducting Super Collider (SSC) Central Design Group (CDG) to develop concepts for the support facilities for the SSC experimental program, including assessment of civil construction constraints on the sizes and depths of experimental halls (1) and study of a variety of conceptual detector designs built at several possible depths (2). With the selection of the Texas site, these studies are being extended to consider an initial generic experimental program at the SSC and a range of possible underground and surface facilities for a range of detector options to determine the possible impacts of these combinations on detector construction.

In this report we consider four generic detector designs and several possible underground hall configurations, and study the implications of siting them at specific locations on the SSC Laboratory site. We have attempted to determine the necessary support facilities for these generic detectors, expecting that this work will have some overlap with the detector designs to be selected by a program committee. We have made no assumptions about the actual scope of the initial SSC experimental program, which may be subject to fiscal and resource limitations. Also, our assumption that the surface support facilities will be completely independent will be subject to reevaluation when actual fiscal constraints and detector needs affecting the site layout are more precisely known. The site model and nomenclature used for this study are taken from the Invitation for Site Proposals (3).

A major goal of this study is to develop a plausible estimate of the time required to launch an experimental program at the SSC. Thus we have attempted to develop realistic model schedules for the civil construction of surface and underground facilities, and integrated this information with our best estimates of a plausible schedule for detector construction. Determining even preliminary schedules for detector construction is an effort fraught with uncertainty, since it is an attempt to assess a schedule for an undesigned object with unknown internal and external constraints.

Despite this caveat, such a schedule is extremely informative, providing insight into the likely critical paths and critical conflicts of parallel construction efforts. The schedules have already demonstrated to us the necessity of decoupling the construction of underground

and surface facilities to ensure that surface facilities will be available early enough to allow local assembly of detector components. The preliminary schedule also provides information on detector subsystems that should get an early start in detector-specific R&D and prototyping in order to be ready for SSC commissioning. Finally, these schedules provide input for scoping the detectors at a size commensurate with timely completion.

## 1.2 The Texas Site and SSC Layout

The SSC site, shown in Figure 1-1, is in Ellis County, Texas, in a rural setting 25 miles south of the Dallas–Fort Worth metropolis. The tunnel ring is to be built beneath gently rolling countryside. The SSC Laboratory as portrayed in the SSC Conceptual Design Report (CDR) (4) will consist of a central campus, the 53-mile-circumference main tunnel in which the magnet rings constrain the two counter-rotating proton beams, the injector complex, and two clusters containing the interaction regions (IRs). The conceptual layout of the ring and laboratory are shown in Figure 1-2. In this model there are six potential interaction regions, four of which will be developed for the first phase of operation. The detectors, discussed in Chapter 3, were arbitrarily placed at the four IRs as follows: the Large Solenoid Detector (LSD) in experimental hall K1; the Nonmagnetic Detector (NMD) in experimental hall K2; the Bottom Collider Detector (BCD) in experimental hall K5; and the DØ Upgrade Detector (DØ) in experimental hall K6. K1 and K2 are in the near (west) cluster of the ring, and K5 and K6 in the far (east) cluster (as are halls K3 and K4, planned for a later phase of development).

## 1.3 Organization of the Study

Chapters 2 through 5 generally describe the detectors, the schedules and their derivation, underground construction techniques, and preliminary plans for surface facilities. Chapter 6 is a detailed description of the site-specific detector models and their facilities, with emphasis on facility construction and detector assembly at the site, together with a set of detailed model schedules for all four IRs.

Drawings which are referred to in the text by numbers keyed to the IRs (e.g., Drawing K1-02) are contained in the appendix, while figures follow as closely as possible their first mention in the text of the report.

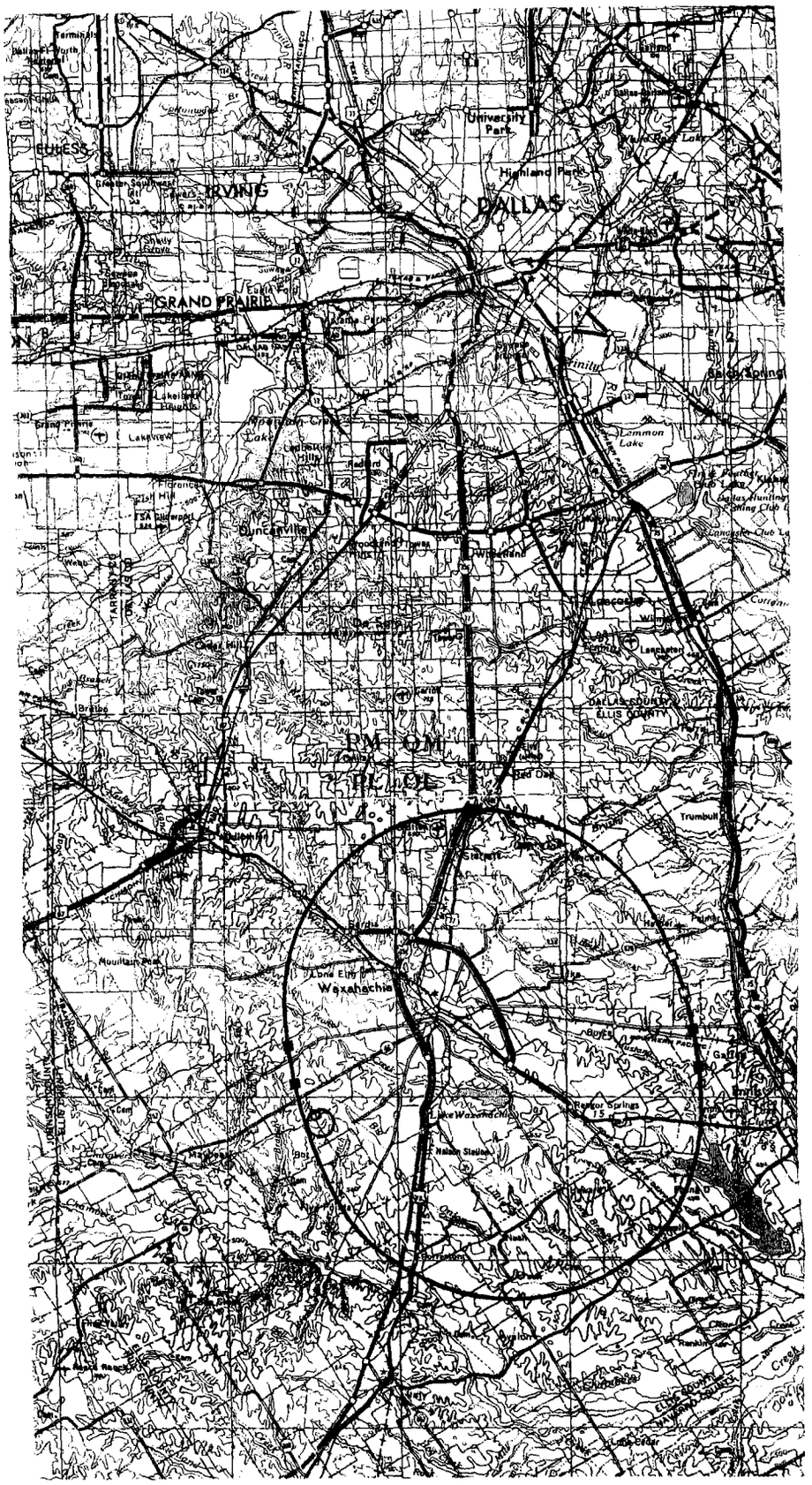


Figure 1-1. The SSC site in Ellis County, Texas.

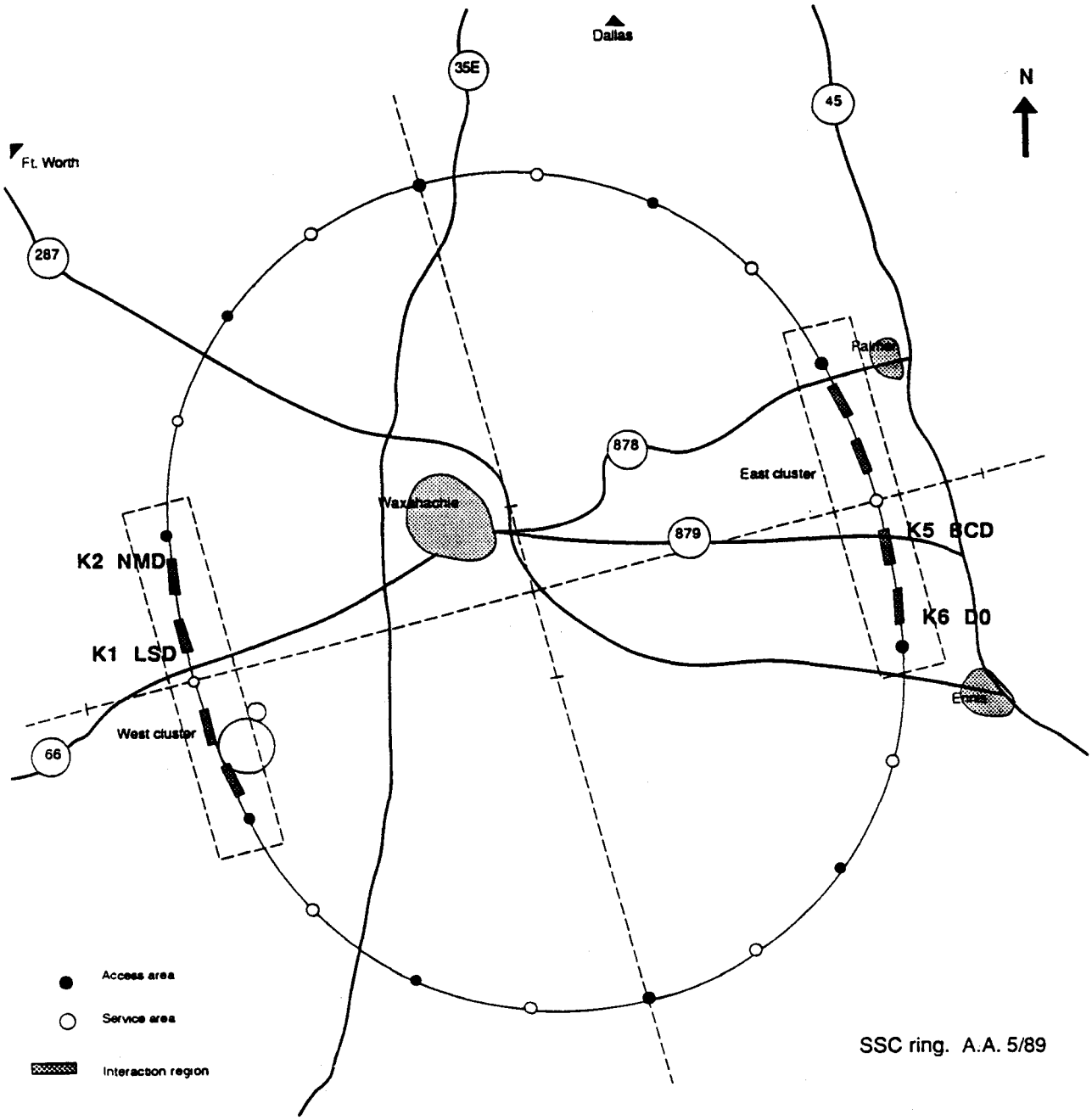


**Figure 1-2. The SSC ring, showing layout of experimental facilities.**

## References

1. Report of the Task Force on Collision Hall Limitations, SSC Central Design Group Report No. SSC-SR-1028 (1987).
2. RTK. Study of SSC Experimental Hall Concepts Using Model Detectors. Oakland, CA (1988).
3. U.S. DOE, Invitation for Site Proposals for the Superconducting Super Collider (SSC), DOE Report Number DOE/ER-0315 (1987).
4. Conceptual Design of the Superconducting Super Collider, SSC Central Design Group Report No. SSC-SR-2020, J.D. Jackson, ed. (1986).

# CHAPTER 2

# INTEGRATED DETECTOR / FACILITY MODEL SCHEDULES

## 2.1 Introduction to the Model Schedules

One of the principal issues addressed in this study is construction scheduling — setting the time scales for construction of the experimental facilities and detectors and understanding the relationships between the schedules. In this chapter we describe the schedules, and the methods and sources used in their derivation. One interaction region and a possible detector design are used as an example (K1 and the large solenoid detector). For each interaction region we have developed an integrated "global" detector/facility schedule to model the interactions between conventional site construction and detector development.

The global schedules address four main topics: preconstruction activities, underground (hall and shaft) construction, surface construction, and detector development. Preconstruction tasks and activities, such as specification of the footprint and acquisition of the land, affect the clusters as a whole rather than individual interaction regions, and so are displayed in cluster schedules. The cluster schedules are discussed here in the context of their impact on global schedules for individual interaction regions. The other three components of the global schedules, underground construction, surface construction, and detector development, are discussed in detail in chapters 3, 5, and 6.

First we discuss the schedules for preconstruction activities for the near and far clusters in terms of sources of schedule information, relations between tasks in the schedules, and assumptions underlying these relations. Then the schedules for the other three activities are presented, and the links among all four topical schedules are outlined. We then discuss the global schedule for interaction region K1 and make observations pertinent to the global schedules for all of the interaction regions.

The preconstruction schedules for the near and far clusters (K1/2-PC and K5/6-PC) appear at the end of this chapter. A set of schedules for the K1 interaction region (K1-1 through 4) are also grouped at the end of this chapter for convenient reference and appear again in Chapter 6 with the complete set of schedules for all interaction regions.

## 2.2 Preconstruction Schedules for the Clusters

The preconstruction schedules (Schedule K1/2-PC for the near cluster and Schedule K5/6-PC for the far cluster) track activities that have a significant influence on hall and detector construction. The dates and durations were derived from various sources. The accelerator systems review dates were taken from schedules presented in the April 1989 Field Task Proposal/Agreement (FTP/A). The decision date for accelerator parameters affecting the footprint was set in discussions concerning land acquisition, the supplemental environmental impact statement, and accelerator systems (1). The footprint specification dates were taken from a schedule developed to track progress and delays in the footprint specification effort, aiming for a 1 August 1989 milestone for setting the footprint. The duration of land acquisition activities was based on estimates by the Texas National Research Laboratory Commission, with the sequence of activities beginning after the collider footprint is set. The Physics Research Division tasks and selection of the Architect-Engineering/ Construction Management (A-E/CM) firm were taken from the FTP/A schedules. The starting dates for the infrastructure tasks were estimated by examining a current funding profile for the SSC project, while the task durations, which include Titles I, II, and III, were derived from the construction schedules provided by the current A-E contractor, RTK (Kaiser Engineers, Inc., Tudor Engineering, and Keller & Gannon-Knight), who were responsible for the 1986 CDR (2). Finally, durations for Title I and II designs for the near and far clusters were taken from schedules developed by the Conventional Facilities Division of the CDG for long-range planning purposes. The present work indicates that, for the model program used, the starting dates for the IRs in the near cluster are driven by decisions relating to experiment proposals, while the starting dates for Title I design for the IRs in the far cluster are determined by fiscal considerations.

There are several important interdependencies among the preconstruction tasks. The accelerator systems decisions, footprint specification, and land acquisition are closely linked. Although collider and injector decisions are shown to continue late into calendar year 1989, it is expected that the parameter decisions that affect the footprint layout will be made in the summer of 1989. A geotechnical investigation of the Texas site is critical to the footprint specification. This investigation, intended to verify geological data provided in the site proposal and to augment available data on vibrations and rock formation interfaces, was scheduled to begin in March, but was delayed into May. These delays in turn delay the presumed footprint specification date. The projected date for transfer of land is changed from 1 March 1990 (as specified in the Final Environmental Impact Statement) to early summer of 1990.

Since the A-E/CM must do the Title I work, both the A-E/CM selection and land transfer activities affect the dates for completion of the near cluster infrastructure required for the experiments. Title I design of primary power distribution systems may be delayed if

there is a delay in bringing the A-E/CM on board, for only three months have been allowed for the A-E/CM to build a staff and assimilate the project information. A more immediate concern is that construction work for the primary electrical and water systems may be pushed back by the delay in the near cluster land transfer date.

The model used in this report indicates that physics research activities determine when underground and surface conventional construction at Kl may begin. It is assumed that, once proposals for experiments are received, preliminary design studies will begin to model hall options specific to the proposals. Once Stage I is approved, the A-E/CM will begin conceptual design, which begins the sequence of titles I and II leading to bid and award of the construction contracts. This relationship is shown in Figure 2-1.

For the far cluster, the land transfer date, even though itself delayed, does not appear to delay completion of the primary power distribution systems in this model. Also, Title I design for both far cluster IRs is driven by funding availability rather than detector specification.

## 2.3 Relations Between Topical Schedules

Schedules K1-1, -2, and -3 are sections of the combined global schedule. Schedule K1-1 is the underground construction model schedule, K1-2 is the surface construction model schedule, and K1-3 is the detector development model schedule. The relationships that allow the files to be combined are outlined briefly below and charted in Figure 2-1.

The preconstruction schedule provides start dates for the other three schedules. The "Contracts Awarded" date is the same as the "Award Contract" date of the underground schedule and the "Award Kll–K17 Contract" date for phase I of surface construction. (K11-17 are detector component fabrication buildings located at K1.) The beginning of the detector development schedule is set by the funding for detector-specific R&D and engineering assistance for design integration. This funding occurs soon after the letters of intent (LOIs) are received and reviewed by the Physics Advisory Committee (PAC). Allocation of funds to detector R&D before any experiments are approved is based on the assumption that the number of LOIs received will not be significantly larger than the number of experiments finally approved and that some LOIs may propose the use of similar detectors.

The underground construction is related to the detector development through the "Hall Structure Complete" date, which marks the start of construction of a clean room to be used for assembly of LSD components. Also, the underground schedule is related to the phase II surface schedule by the "Equipment Shaft Structure Complete" date, in that the phase II contract award is timed so construction of the "Equipment Shaft Head-House" may begin as soon as the equipment shaft structure is completed. Similarly, the surface schedule is related to the detector schedule through the "Beneficial Occupancy" date of phase I buildings, which allows on-site detector component fabrication to begin. These relationships are charted in Figure 2-2. Finally, the phase II surface schedule for K1 is related to the detector schedule by the "P1 Shaft Head-House" completion date, which signals the start of steel assembly in place.

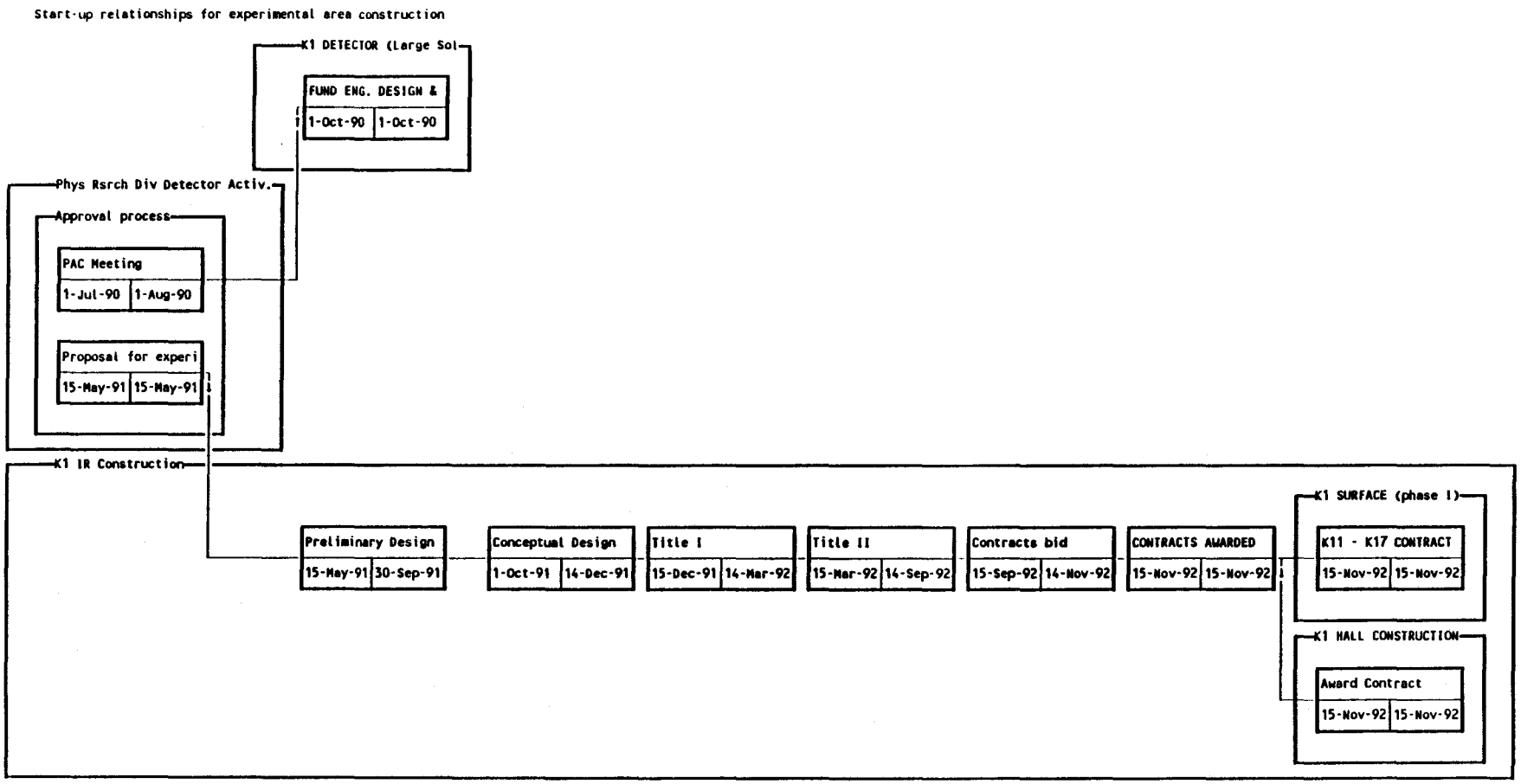


**Figure 2-1. Start-up relationships for experimental area construction.**

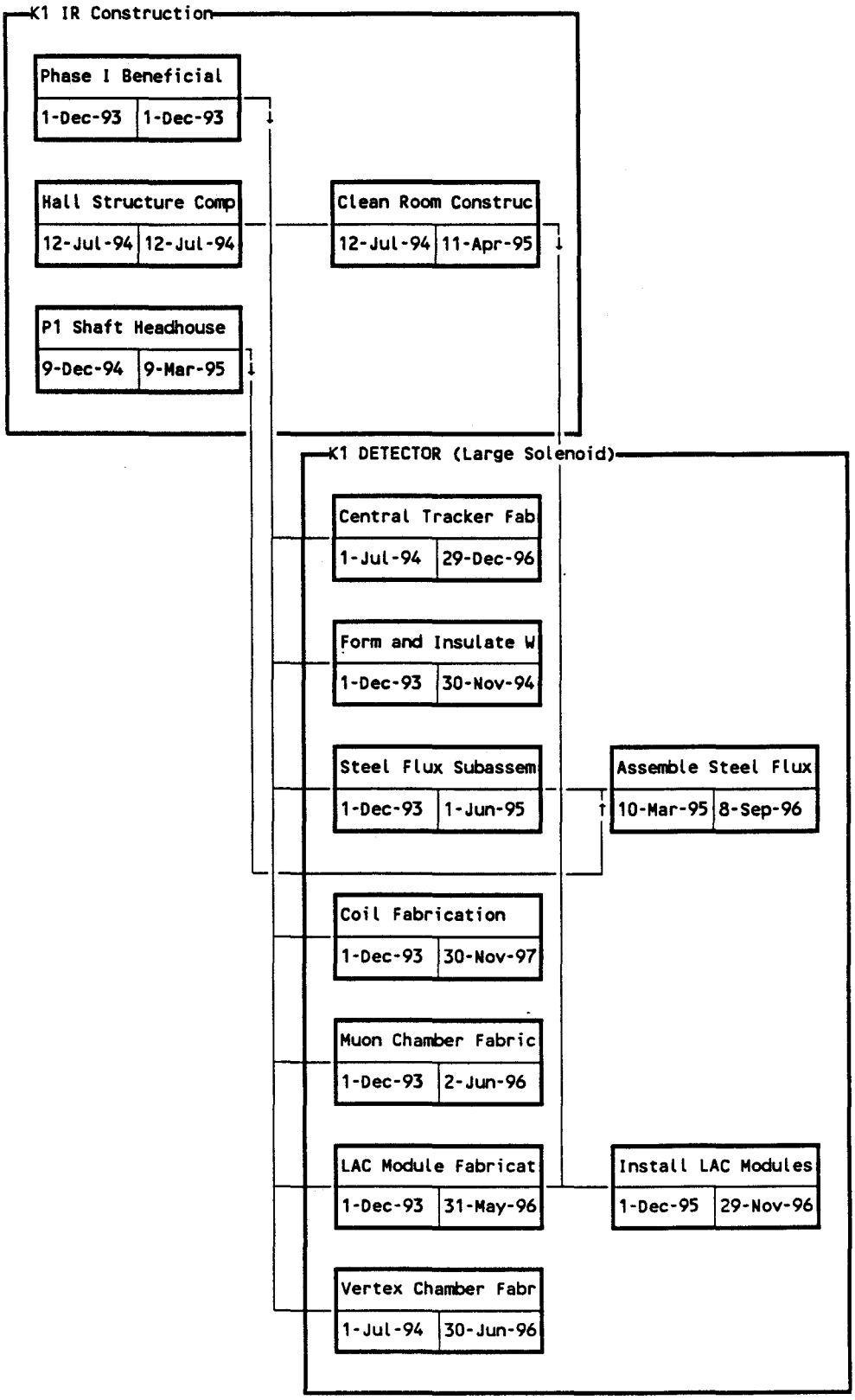


**Figure 2-2. Dependency relationships between civil and detector construction.**

## 2.4 The Integrated Schedules

Schedule K1-4 is a one-page summary of the global model schedule for the Kl interaction region, created by combining schedules K1/2-PC, K1-1, K1-2, and K1-3. A number of caveats should be observed with respect to this schedule. The start dates that drive the schedules (especially those based on fiscal considerations) are the most uncertain elements because of the many outside occurrences that affect them. For instance, as of the end of July Congress had not authorized the project. Also, the SSC Laboratory might choose to construct an arc sector before beginning K1 and K2 IR construction, so that a more typical accelerator section than that in the near cluster may be developed and tested first. In particular, the start of infrastructure construction is tentative because, for lack of a geotechnical site investigation and fixing of the lattice parameters, the final collider ring footprint is yet to be determined.

Based on the above, these schedules are seen to be preliminary models that attempt to show the flow of events leading to operational detectors. Their main use is to suggest which tasks lie on or near the critical path of the effort to bring the detectors on-line in a timely manner and, by trying several variations on the schedules, to determine which modifications may relieve time pressures on the critical paths. For instance, during a review of detector issues at the CDG, it was suggested that the construction of surface facilities should be decoupled from underground construction by separating assembly buildings from the equipment shafts. With further study, these schedules could reflect other influences on the detector schedules, such as the effect of booster construction and test beam availability.

Finally, it should be noted that the schedules for the detector construction are extremely imprecise. They are schedules for design, development, fabrication, and assembly of hypothetical detectors extrapolated from much smaller detectors. We have worked from the conceptual workshop ideas and used our experience with large detectors to extrapolate to the SSC scale. Clearly these schedules are broadly indicative at best. Independent consultants with experience at national laboratories have reviewed the schedules and assessed them as being optimistic. The lesson in this is that the scale of the detectors must be carefully controlled, resources must be provided in a timely fashion, and, most important, detector R&D must be highly developed for any technology that is contemplated as an SSC detector.

## References

1. T. E. Toohig, Draft Notes from 4/19/89 Meeting at TNRLC (unpublished).
2. Conceptual Design of the Superconducting Super Collider, SSC Central Design Group Report No. SSC-SR-2020, J.D. Jackson, ed. (1986).

PRE-CONSTRUCTION SCHEDULE FOR THE NEAR CLUSTER

| Task Name | Start Date | Duratn (Mths) | End Date |
|---|---|---|---|
| Near Cluster Land Acquisition | 1-Apr-89 | 15.3 | 9-Jul-90 |
| Accelerator Systems Decisions | 1-Apr-89 | 8.1 | 1-Dec-89 |
| + Main Ring Specification | 1-Apr-89 | 8.1 | 1-Dec-89 |
| + Injector Specification | 15-Apr-89 | 6.6 | 1-Nov-89 |
| Footprint Specification | 15-Apr-89 | 5 | 14-Sep-89 |
| Site layout review | 15-Apr-89 | 1.6 | 1-Jun-89 |
| Verify data in state propos | 1-May-89 | 0.7 | 21-May-89 |
| Geotech site investigation | 15-May-89 | 2.6 | 1-Aug-89 |
| Develop options | 15-Jun-89 | 2 | 15-Aug-89 |
| Adapt footprint to site | 15-Jul-89 | 2 | 14-Sep-89 |
| SET FOOTPRINT | 15-Sep-89 | 0 | 15-Sep-89 |
| Land Acquisition | 15-Sep-89 | 9.8 | 9-Jul-90 |
| Fix land boundaries | 15-Sep-89 | 2.8 | 7-Dec-89 |
| Parcel determination | 8-Dec-89 | 1.4 | 20-Jan-90 |
| Near cluster land acquisitn | 21-Jan-90 | 5.6 | 9-Jul-90 |
| Near cluster land transfer | 10-Jul-90 | 0 | 10-Jul-90 |
| A-E/CM Selection | 15-Jan-89 | 8.6 | 1-Oct-89 |
| Solicit & evaluate proposals | 15-Jan-89 | 6.2 | 21-Jul-89 |
| Eval. Board recommends 3 firms | 22-Jul-89 | 0 | 22-Jul-89 |
| A-E/CM selection | 22-Jul-89 | 0.5 | 4-Aug-89 |
| Negotiations with firm selecte | 5-Aug-89 | 1.9 | 1-Oct-89 |
| A-E/CM onboard | 1-Oct-89 | 0 | 1-Oct-89 |
| Near Cluster Infrastructure | 2-Jan-90 | 38.7 | 24-Mar-93 |
| Electrical (Title 1-3) | 2-Jan-90 | 14.4 | 15-Mar-91 |
| Water (Title 1-3) | 1-Apr-90 | 9.5 | 15-Jan-91 |
| Communications (Title 1-3) | 1-Jun-90 | 7.2 | 6-Jan-91 |
| Roads (Title 1-3) | 15-Aug-91 | 19.3 | 24-Mar-93 |
| Auxiliary Systems (Title 1-3) | 15-Mar-92 | 5 | 15-Aug-92 |
| Phys Rsrch Div Detector Activ. | 1-Jun-89 | 35.5 | 15-May-92 |
| Preliminary detector R&D | 1-Jun-89 | 28 | 1-Oct-91 |
| Generic proposals to DOE | 1-Jun-89 | 0 | 1-Jun-89 |
| FY 90 generic program | 1-Oct-89 | 12 | 30-Sep-90 |
| Sub-system R&D proposals | 1-Oct-89 | 0 | 1-Oct-89 |
| Sub-system program | 1-Oct-89 | 24 | 1-Oct-91 |
| Approval process | 15-May-90 | 24.1 | 15-May-92 |
| First letter of intent | 15-May-90 | 0 | 15-May-90 |
| PAC Meeting | 1-Jul-90 | 1 | 1-Aug-90 |
| Proposal for experiments | 15-May-91 | 0 | 15-May-91 |
| PAC Meeting | 1-Jul-91 | 1 | 1-Aug-91 |
| Stage I approval | 1-Oct-91 | 0 | 1-Oct-91 |
| DETECTOR DESIGN REPORT | 15-May-91 | 12.1 | 15-May-92 |
| Near Cluster IR Pre-Constructn | 15-May-91 | 18 | 14-Nov-92 |
| Preliminary design studies | 15-May-91 | 4.5 | 30-Sep-91 |
| Conceptual Design | 1-Oct-91 | 2.5 | 14-Dec-91 |
| Title I | 15-Dec-91 | 3 | 14-Mar-92 |
| Title II | 15-Mar-92 | 6 | 14-Sep-92 |
| Contracts bid | 15-Sep-92 | 2 | 14-Nov-92 |
| CONTRACTS AWARDED | 15-Nov-92 | 0 | 15-Nov-92 |

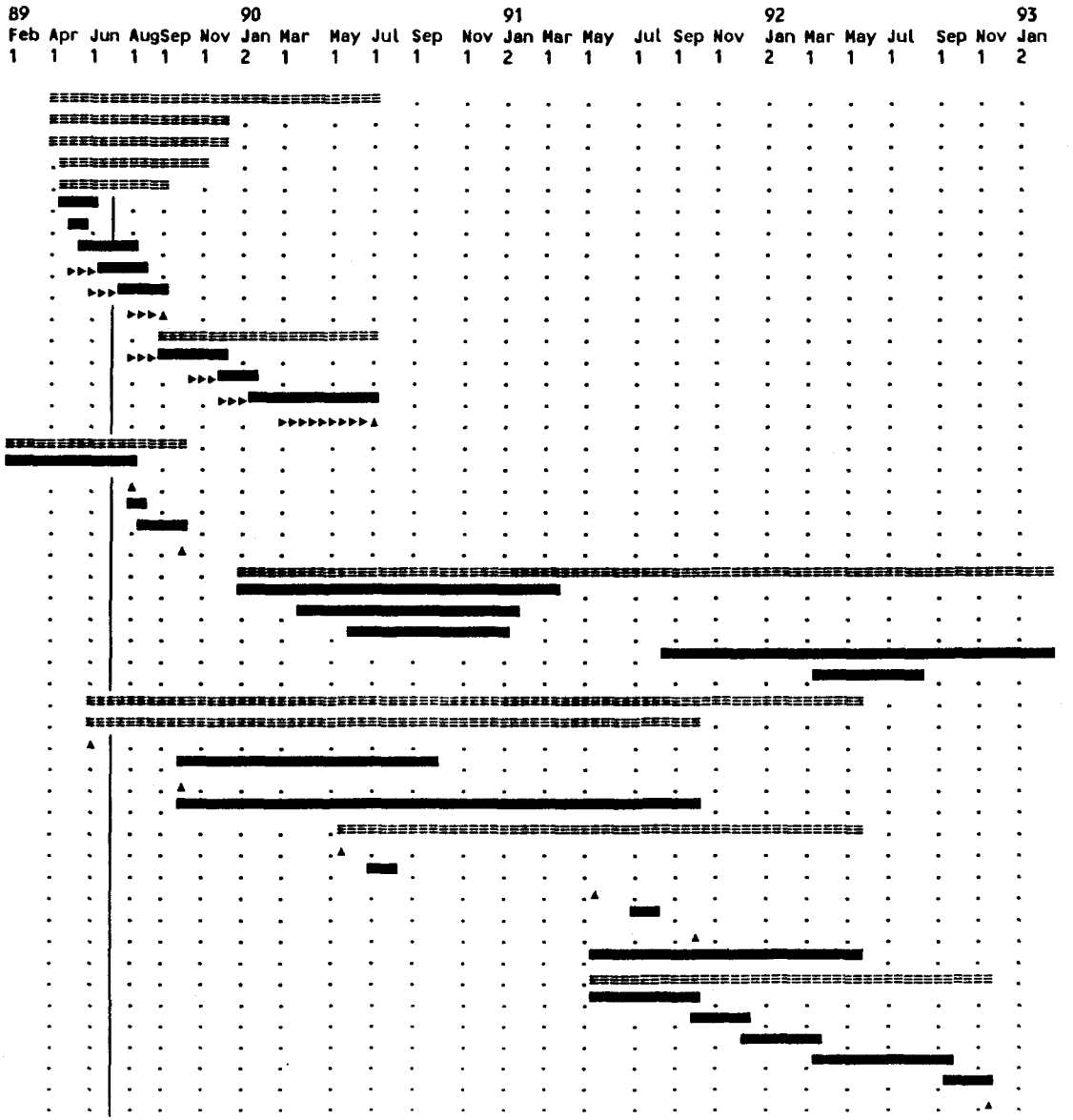






Schedule K 1/2 - PC

PRE-CONSTRUCTION SCHEDULE FOR THE FAR CLUSTER

| Task Name | Start Date | Duratn (Mths) | End Date |
|---|---|---|---|
| Cluster Land Acquisition | 1-Apr-89 | 19.3 | 9-Nov-90 |
| + Accelerator Systems Decisions | 1-Apr-89 | 8.1 | 1-Dec-89 |
| Footprint Specification | 15-Apr-89 | 5 | 14-Sep-89 |
| Site layout review | 15-Apr-89 | 1.6 | 1-Jun-89 |
| Verify data in state propos | 1-May-89 | 0.7 | 21-May-89 |
| Geotech site investigation | 15-May-89 | 2.6 | 1-Aug-89 |
| Develop options | 15-Jun-89 | 2 | 15-Aug-89 |
| Adapt footprint to site | 15-Jul-89 | 2 | 14-Sep-89 |
| SET FOOTPRINT | 15-Sep-89 | 0 | 15-Sep-89 |
| Land Acquisition | 15-Sep-89 | 13.9 | 9-Nov-90 |
| Fix land boundaries | 15-Sep-89 | 2.8 | 7-Dec-89 |
| Parcel determination | 8-Dec-89 | 1.4 | 20-Jan-90 |
| Near cluster land acquisitn | 21-Jan-90 | 5.6 | 9-Jul-90 |
| Near cluster land transfer | 10-Jul-90 | 0 | 10-Jul-90 |
| Far cluster land acquisitn | 10-Jul-90 | 4.1 | 9-Nov-90 |
| Far cluster land transfer | 10-Nov-90 | 0 | 10-Nov-90 |
| A-E/CM Selection | 15-Jan-89 | 8.6 | 1-Oct-89 |
| Solicit & evaluate proposals | 15-Jan-89 | 6.2 | 21-Jul-89 |
| Eval. Board recommends 3 firms | 22-Jul-89 | 0 | 22-Jul-89 |
| A-E/CM selection | 22-Jul-89 | 0.5 | 4-Aug-89 |
| Negotiations with firm selecte | 5-Aug-89 | 1.9 | 1-Oct-89 |
| A-E/CM onboard | 1-Oct-89 | 0 | 1-Oct-89 |
| Far Cluster Infrastructure | 1-Dec-90 | 27.7 | 24-Mar-93 |
| Electrical (Title 1-3) | 1-Dec-90 | 14.5 | 15-Feb-92 |
| Water (Title 1-3) | 20-Jul-91 | 9.5 | 2-May-92 |
| Communications (Title 1-3) | 20-Apr-92 | 7.2 | 25-Nov-92 |
| Roads (Title 1-3) | 15-Aug-91 | 19.3 | 24-Mar-93 |
| Auxiliary Systems (Title 1-3) | 15-Mar-92 | 5 | 15-Aug-92 |
| Phys Rsrch Div Detector Activ. | 1-Jun-89 | 35.5 | 15-May-92 |
| Preliminary detector R&D | 1-Jun-89 | 28 | 1-Oct-91 |
| Generic proposals to DOE | 1-Jun-89 | 0 | 1-Jun-89 |
| FY 90 generic program | 1-Oct-89 | 12 | 30-Sep-90 |
| Sub-system R&D proposals | 1-Oct-89 | 0 | 1-Oct-89 |
| Sub-system program | 1-Oct-89 | 24 | 1-Oct-91 |
| Approval process | 15-May-90 | 24.1 | 15-May-92 |
| First letter of intent | 15-May-90 | 0 | 15-May-90 |
| PAC Meeting | 1-Jul-90 | 1 | 1-Aug-90 |
| Proposal for experiments | 15-May-91 | 0 | 15-May-91 |
| PAC Meeting | 1-Jul-91 | 1 | 1-Aug-91 |
| Stage I approval | 1-Oct-91 | 0 | 1-Oct-91 |
| DETECTOR DESIGN REPORT | 15-May-91 | 12.1 | 15-May-92 |
| Far Cluster IR Pre-Constructn | 15-May-91 | 30.6 | 30-Nov-93 |
| Preliminary design studies | 15-May-91 | 4.5 | 30-Sep-91 |
| Conceptual Design | 15-Oct-92 | 2.6 | 31-Dec-92 |
| Title I | 2-Jan-93 | 3 | 31-Mar-93 |
| Title II | 1-Apr-93 | 6 | 30-Sep-93 |
| Contracts bid | 1-Oct-93 | 2 | 30-Nov-93 |
| CONTRACTS AWARDED | 1-Dec-93 | 0 | 1-Dec-93 |

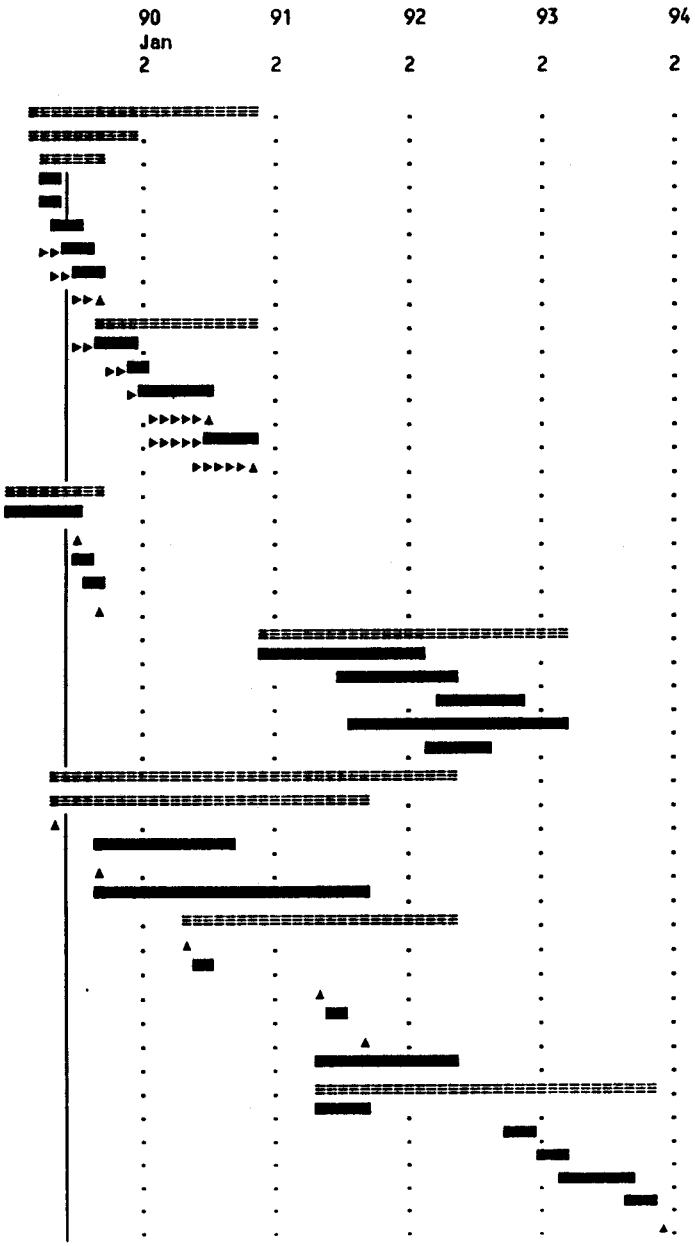


Schedule K 5/6 - PC

MODEL SCHEDULE FOR K1 HALL CONSTRUCTION (OPEN CUT)

| Task Name | Start Date | Duratn (Days) | End Date |
|---|---|---|---|
| Award Contract | 16-Nov-92 | 0 | 16-Nov-92 |
| Site Preparation | 16-Nov-92 | 30 | 30-Dec-92 |
| Open Cut Excavation | 16-Nov-92 | 200 | 31-Aug-93 |
| Topsoil Removal/Drainage | 16-Nov-92 | 20 | 15-Dec-92 |
| Ramp & Pit Excavation | 9-Dec-92 | 75 | 26-Mar-93 |
| Mucking Reorganization | 29-Mar-93 | 10 | 9-Apr-93 |
| Hall Exc. -Beam & Shaft Tunnel | 12-Apr-93 | 100 | 31-Aug-93 |
| Hall Structure | 18-Aug-93 | 225 | 11-Jul-94 |
| Floor Mud-Mat & Prep. | 18-Aug-93 | 20 | 15-Sep-93 |
| Detector Foundations | 16-Sep-93 | 55 | 6-Dec-93 |
| Final Floor | 7-Dec-93 | 30 | 19-Jan-94 |
| Sidewalls & Crane Support | 20-Jan-94 | 60 | 14-Apr-94 |
| Roof | 15-Apr-94 | 60 | 11-Jul-94 |
| Hall Structure Complete | 12-Jul-94 | 0 | 12-Jul-94 |
| Over Hall Struc. & Backfill | 13-Jun-94 | 180 | 28-Feb-95 |
| Placement of Fdns. Columns | 13-Jun-94 | 30 | 25-Jul-94 |
| Backfill to 1st Bench Level | 26-Jul-94 | 20 | 22-Aug-94 |
| 1st Floor Placement | 23-Aug-94 | 20 | 20-Sep-94 |
| Con.Over Hall Lev.&Sidefill | 7-Sep-94 | 70 | 15-Dec-94 |
| O.H.S Beneficial Occupancy | 16-Dec-94 | 0 | 16-Dec-94 |
| Surface Rehabilitation | 16-Dec-94 | 50 | 28-Feb-95 |
| Beam Tunnel Link-ups | 22-Jun-93 | 195 | 31-Mar-94 |
| Excavation | 22-Jun-93 | 30 | 3-Aug-93 |
| Concrete | 20-Jan-94 | 50 | 31-Mar-94 |
| Beam Tunnel Structure Complete | 1-Apr-94 | 0 | 1-Apr-94 |
| E Shaft Structure | 1-Apr-94 | 125 | 27-Sep-94 |
| Surface Operations | 1-Apr-94 | 35 | 19-May-94 |
| Shaft Sink | 13-May-94 | 55 | 1-Aug-94 |
| Concrete | 2-Aug-94 | 40 | 27-Sep-94 |
| E Shaft Structure Complete | 28-Sep-94 | 0 | 28-Sep-94 |
| P1 Shaft Structure | 18-Aug-93 | 330 | 8-Dec-94 |
| Surface Operations | 18-Aug-93 | 35 | 6-Oct-93 |
| Shaft Sink | 7-Oct-93 | 50 | 20-Dec-93 |
| Concrete | 12-Oct-94 | 40 | 8-Dec-94 |
| P1 Shaft Structure Complete | 9-Dec-94 | 0 | 9-Dec-94 |
| P2 Shaft Structure | 16-Sep-93 | 360 | 21-Feb-95 |
| Surface Operations | 16-Sep-93 | 35 | 4-Nov-93 |
| Shaft Sink | 5-Nov-93 | 50 | 19-Jan-94 |
| Concrete | 23-Dec-94 | 40 | 21-Feb-95 |
| P2 Shaft Structure Complete | 22-Feb-95 | 0 | 22-Feb-95 |

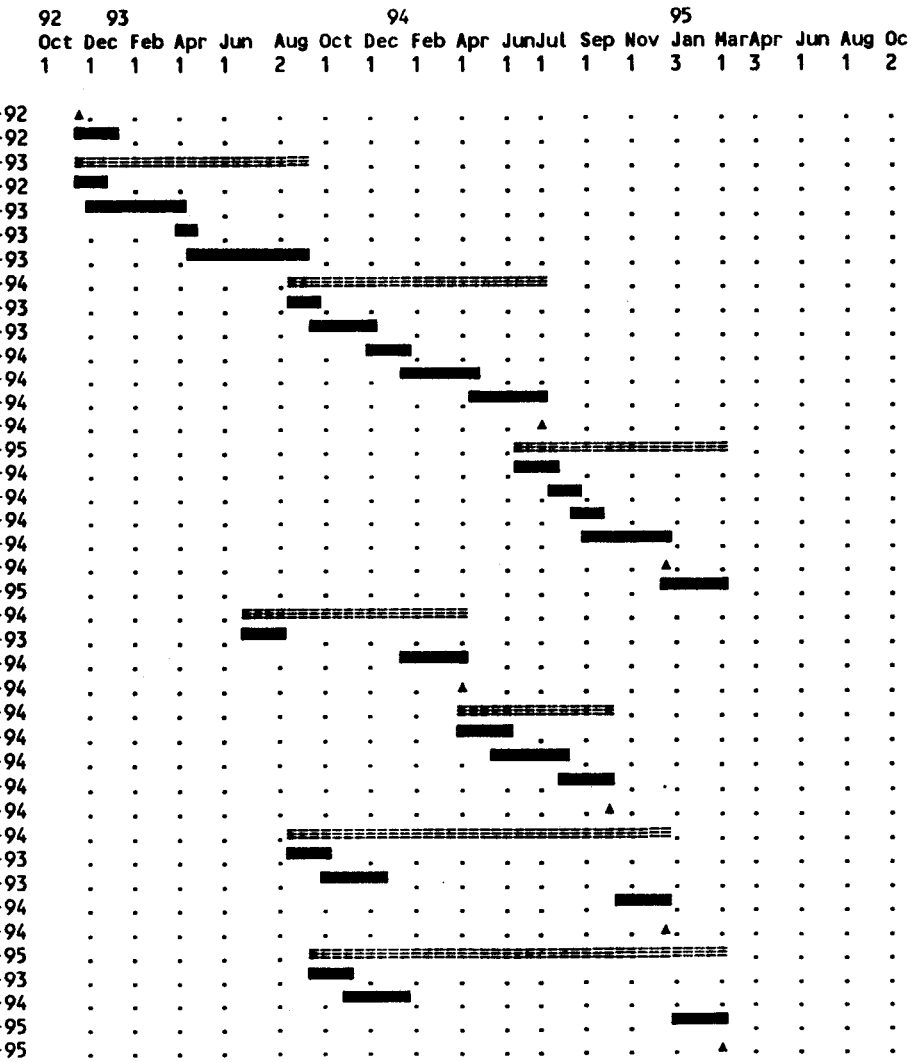


Detail Task ▬▬ Summary Task ▲ Milestone
(Started) (Started) ▸▸▸ Conflict
(Slack) (Slack) Resource delay
Scale: 2 weeks per character

Schedule K1 - 1

MODEL SCHEDULE FOR K1 SURFACE CONSTRUCTION

| Task Name | Start Date | Duratn (Mths) | End Date |
|---|---|---|---|
| K1 Surface (phase I) | 15-Nov-92 | 12.5 | 30-Nov-93 |
| K11 - K17 CONTRACT | 15-Nov-92 | 0 | 15-Nov-92 |
| Mobilization | 15-Nov-92 | 0.6 | 1-Dec-92 |
| Site Preparation | 2-Dec-92 | 2 | 31-Jan-93 |
| Foundations | 2-Jan-93 | 4 | 30-Apr-93 |
| Structural Systems | 1-Mar-93 | 4 | 29-Jun-93 |
| Walls & Roof Panels | 1-May-93 | 4 | 29-Aug-93 |
| Mech., Elec., & Furn. Install. | 1-Jul-93 | 5 | 29-Nov-93 |
| Roads & Landscape | 1-Aug-93 | 4 | 30-Nov-93 |
| BENEFICIAL OCCUPANCY | 1-Dec-93 | 0 | 1-Dec-93 |
| K1 Surface (phase II) | 14-Sep-94 | 8.3 | 21-May-95 |
| K18, K19, K111 CONTRACT | 14-Sep-94 | 0 | 14-Sep-94 |
| Mobilization | 14-Sep-94 | 0.5 | 27-Sep-94 |
| Equipment Shaft Headhouse | 28-Sep-94 | 4 | 27-Jan-95 |
| P1 Shaft Headhouse | 9-Dec-94 | 3 | 9-Mar-95 |
| P2 Shaft Headhouse | 22-Feb-95 | 3 | 21-May-95 |
| BENEFICIAL OCCUPANCY | 22-May-95 | 0 | 22-May-95 |

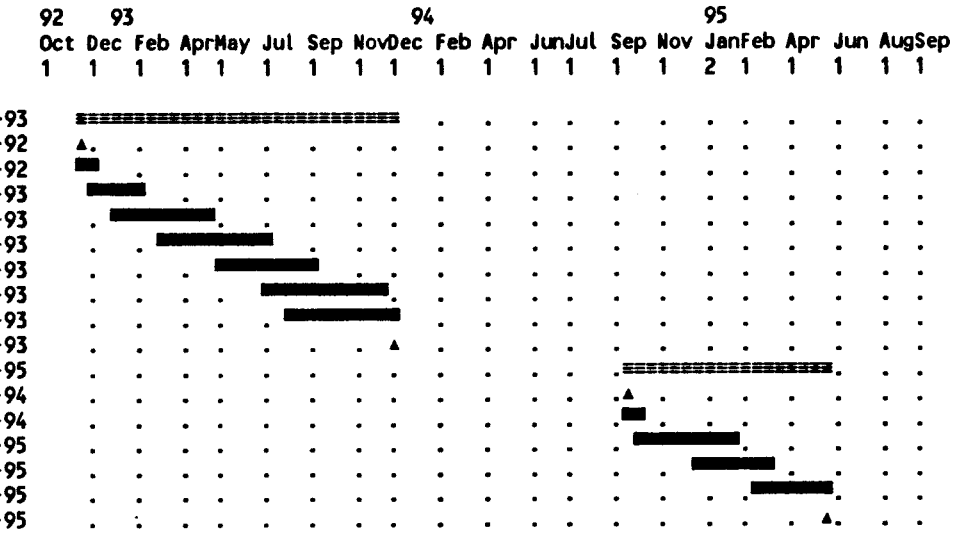


Detail Task — Summary Task — Milestone
(Started) — (Started) — Conflict
(Slack) — (Slack) — Resource delay

Scale: 2 weeks per character

Schedule K1 - 2

MODEL SCHEDULE FOR K1 DETECTOR (Large Solenoid)

| Task Name | Start Date | Duratn (Mths) | End Date |
|---|---|---|---|
| BUILDINGS | 1-Dec-93 | 16.3 | 11-Apr-95 |
| Buildings K11 - K17 Ready | 1-Dec-93 | 0 | 1-Dec-93 |
| Experimental Hall Complete | 12-Jul-94 | 0 | 12-Jul-94 |
| Clean Room Construction | 12-Jul-94 | 9 | 11-Apr-95 |
| Exp. Hall Beneficial Occupancy | 9-Mar-95 | 0 | 9-Mar-95 |
| FUND ENG. DESIGN & SPECIF. R&D | 1-Oct-90 | 0 | 1-Oct-90 |
| STEEL | 2-Jan-91 | 78.2 | 8-Jul-97 |
| Steel Design | 2-Jan-91 | 12 | 31-Dec-91 |
| Flux Return Construction | 2-Jan-92 | 41 | 31-May-95 |
| Procure Steel Flux Return | 2-Jan-92 | 18 | 2-Jul-93 |
| Flux Subassembly Fabricatio | 1-Dec-93 | 18 | 31-May-95 |
| Endcaps Construction | 2-Jan-92 | 43 | 31-Jul-95 |
| Procure Steel Endcap | 2-Jan-92 | 12 | 31-Dec-92 |
| Endcap Subassembly Fabricat | 1-Jun-95 | 2 | 31-Jul-95 |
| Internal Toroids Construction | 2-Jan-92 | 46 | 30-Oct-95 |
| Procure Steel Int Toroids | 2-Jan-92 | 12 | 31-Dec-92 |
| Int Toriod Subassembly Fabr | 1-Aug-95 | 3 | 30-Oct-95 |
| Warm Coil | 2-Jan-92 | 35 | 30-Nov-94 |
| Procure Coil Copper | 2-Jan-92 | 12 | 31-Dec-92 |
| Form and Insulate Warm Coil | 1-Dec-93 | 12 | 30-Nov-94 |
| Assembly | 9-Mar-95 | 28 | 8-Jul-97 |
| Flux Return in Exp Hall | 9-Mar-95 | 18 | 7-Sep-96 |
| Endcap 1 | 8-Sep-96 | 2 | 6-Nov-96 |
| Endcap 2 | 7-Nov-96 | 2 | 8-Jan-97 |
| Internal Toroid 1 & Coil | 8-Jan-97 | 3 | 7-Apr-97 |
| Internal Toroid 2 & Coil | 7-Apr-97 | 3 | 8-Jul-97 |
| Steel Work Complete | 8-Jul-97 | 0 | 8-Jul-97 |
| COIL | 1-Oct-90 | 89 | 1-Mar-98 |
| Coil Design | 1-Oct-90 | 9 | 30-Jun-91 |
| Procure Materials | 1-Jul-91 | 6 | 29-Dec-91 |
| Coil Fabrication | 1-Dec-93 | 48 | 30-Nov-97 |
| Install Superconducting Coil | 1-Dec-97 | 3 | 1-Mar-98 |
| MUON CHAMBER | 1-Oct-90 | 77.3 | 9-Mar-97 |
| Muon Chamber R&D | 1-Oct-90 | 12 | 30-Sep-91 |
| Chamber & Support Prototype | 1-Oct-91 | 12 | 30-Sep-92 |
| Produce Muon Chambers | 1-Dec-93 | 30 | 31-May-96 |
| Install & Align Muon Chambers | 8-Sep-96 | 6 | 9-Mar-97 |
| LIQUID ARGON CALORIMETER | 1-Oct-90 | 83 | 30-Aug-97 |
| LAC Modules | 1-Oct-90 | 68 | 31-May-96 |
| LAC Module R&D | 1-Oct-90 | 12 | 30-Sep-91 |
| Module Prototype & Tests | 1-Oct-91 | 18 | 31-Mar-93 |
| Module Fabrication | 1-Dec-93 | 30 | 31-May-96 |
| LAC Cryostat | 1-Apr-91 | 77 | 30-Aug-97 |
| LAC Cryostat Design | 1-Apr-91 | 12 | 31-Mar-92 |
| Cryostat Fabrication | 1-Apr-92 | 24 | 31-Mar-94 |
| Install Modules in Cryostat | 2-Dec-95 | 12 | 30-Nov-96 |

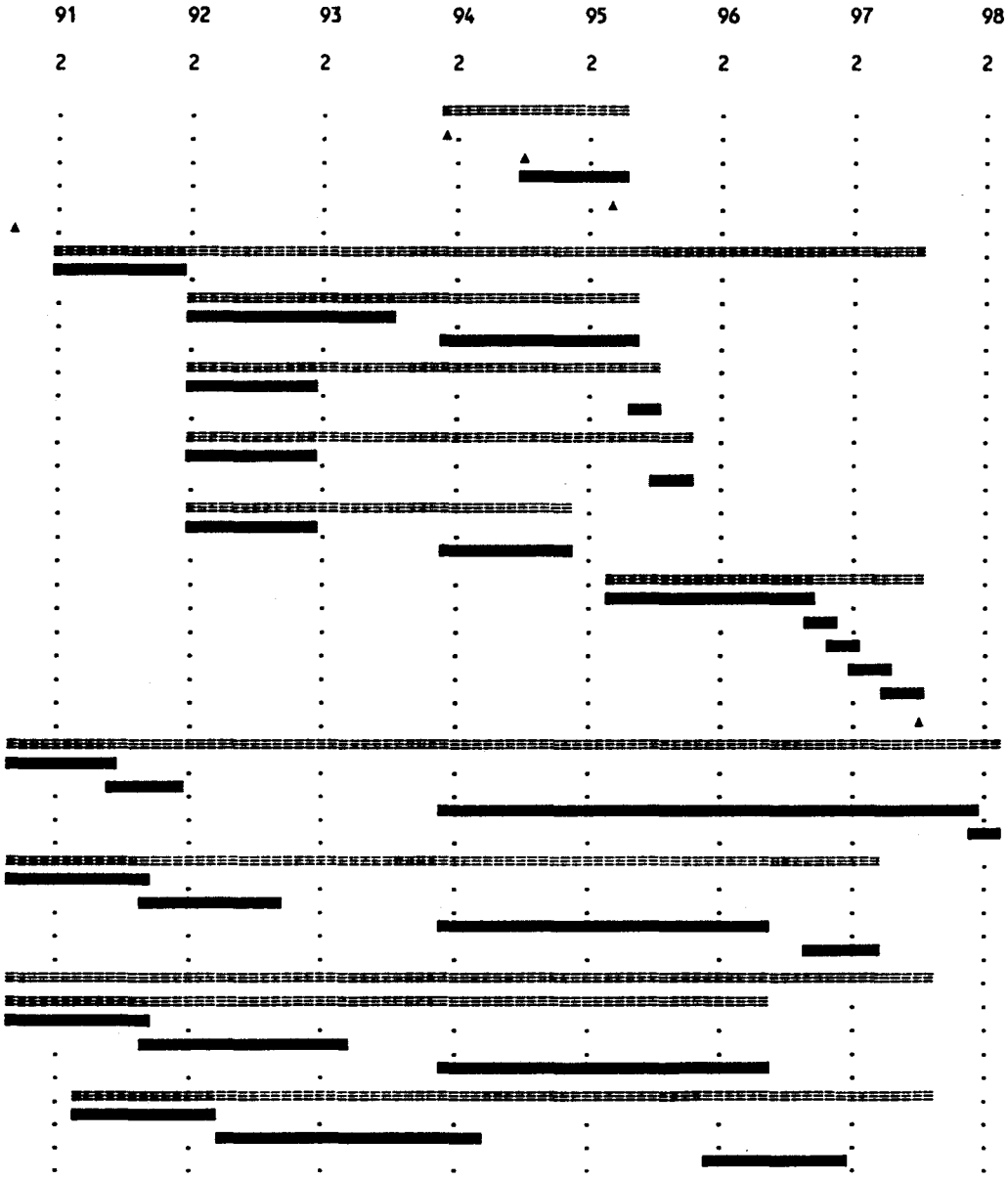


Schedule K1 - 3, page 1 of 2

| | | | |
|---|---|---|---|
| Cable & Test LAC Cryostat | 1-Dec-96 | 6 | 31-May-97 |
| Weld Vessel & Test | 1-Jun-97 | 3 | 30-Aug-97 |
| INTERNAL DETECTOR | 1-Oct-90 | 99 | 30-Dec-98 |
| Internal Detector Specificatio | 1-Oct-90 | 9 | 30-Jun-91 |
| Vertex Chamber | 1-Jul-91 | 60 | 30-Jun-96 |
| Vertex Chamber R&D | 1-Jul-91 | 18 | 31-Dec-92 |
| Chamber Prototype | 2-Jan-93 | 18 | 30-Jun-94 |
| Vertex Chamber Fabrication | 1-Jul-94 | 24 | 30-Jun-96 |
| Central Tracker | 1-Jul-91 | 66 | 29-Dec-96 |
| Central Tracker R&D | 1-Jul-91 | 18 | 31-Dec-92 |
| Tracker Prototype | 2-Jan-93 | 18 | 30-Jun-94 |
| Central Tracker Fabrication | 1-Jul-94 | 30 | 29-Dec-96 |
| Internal Detector Assembly | 2-Mar-98 | 10 | 30-Dec-98 |
| Install LAC in Coil | 2-Mar-98 | 2 | 30-Apr-98 |
| Install Trackers & Chamber | 1-May-98 | 2 | 30-Jun-98 |
| Cryo-Cable Hook-up & Cooldo | 1-May-98 | 4 | 30-Aug-98 |
| Cable & Test Trackers | 1-Jul-98 | 6 | 30-Dec-98 |
| DETECTOR OPERATIONAL | 31-Dec-98 | 0 | 31-Dec-98 |

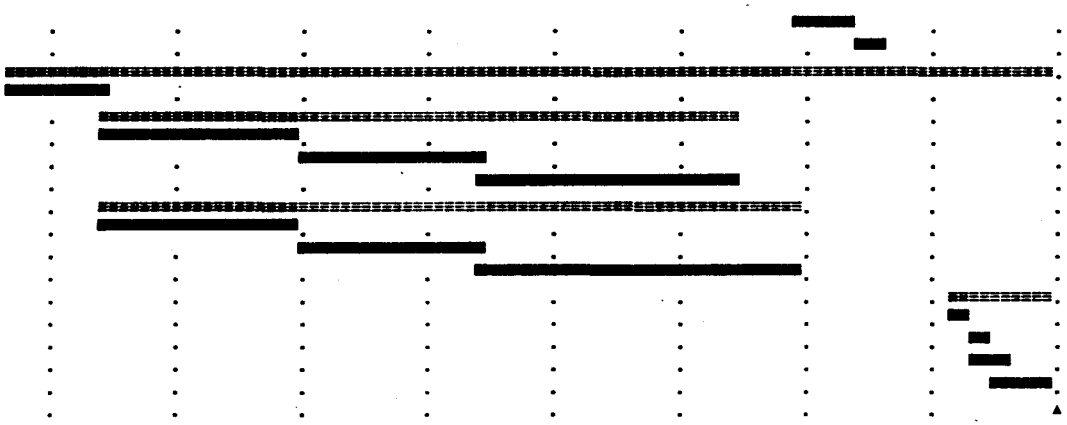

Detail Task — Summary Task — Milestone
(Started) — (Started) — Conflict
(Slack) — (Slack) — Resource delay

Scale: 1 month per character

**Schedule K1 - 3, page 2 of 2**

SUMMARY OF MODEL SCHEDULE OF K1 DEVELOPMENT

| Task Name | Start Date | Duratn (Mths) | End Date |
|---|---|---|---|
| + Near Cluster Land Acquisition | 1-Apr-89 | 15.3 | 9-Jul-90 |
| + A-E/CM Selection | 15-Jan-89 | 8.6 | 1-Oct-89 |
| Near Cluster Infrastructure | 2-Jan-90 | 38.7 | 24-Mar-93 |
| Electrical (Title 1-3) | 2-Jan-90 | 14.4 | 15-Mar-91 |
| Water (Title 1-3) | 1-Apr-90 | 9.5 | 15-Jan-91 |
| Communications (Title 1-3) | 1-Jun-90 | 7.2 | 6-Jan-91 |
| Roads (Title 1-3) | 15-Aug-91 | 19.3 | 24-Mar-93 |
| Auxiliary Systems (Title 1-3) | 15-Mar-92 | 5 | 15-Aug-92 |
| Phys Rsrch Div Detector Activ. | 1-Jun-89 | 35.5 | 15-May-92 |
| + Preliminary detector R&D | 1-Jun-89 | 28 | 1-Oct-91 |
| Approval process | 15-May-90 | 24.1 | 15-May-92 |
| First letter of intent | 15-May-90 | 0 | 15-May-90 |
| PAC Meeting | 1-Jul-90 | 1 | 1-Aug-90 |
| Proposal for experiments | 15-May-91 | 0 | 15-May-91 |
| PAC Meeting | 1-Jul-91 | 1 | 1-Aug-91 |
| Stage I approval | 1-Oct-91 | 0 | 1-Oct-91 |
| DETECTOR DESIGN REPORT | 15-May-91 | 12.1 | 15-May-92 |
| K1 IR Construction | 15-May-91 | 48.2 | 21-May-95 |
| Preliminary Design Studies | 15-May-91 | 4.5 | 30-Sep-91 |
| Conceptual Design | 1-Oct-91 | 2.5 | 14-Dec-91 |
| Title I | 15-Dec-91 | 3 | 14-Mar-92 |
| Title II | 15-Mar-92 | 6 | 14-Sep-92 |
| Contracts bid | 15-Sep-92 | 2 | 14-Nov-92 |
| CONTRACTS AWARDED | 15-Nov-92 | 0 | 15-Nov-92 |
| + K1 SURFACE (phase I) | 15-Nov-92 | 12.5 | 30-Nov-93 |
| Phase I Beneficial Occupancy | 1-Dec-93 | 0 | 1-Dec-93 |
| + K1 HALL CONSTRUCTION | 15-Nov-92 | 28.9 | 11-Apr-95 |
| Hall Beneficial Occupancy | 10-Mar-95 | 0 | 10-Mar-95 |
| + K1 SURFACE (phase II) | 14-Sep-94 | 8.3 | 21-May-95 |
| Phase II Beneficial Occupancy | 22-May-95 | 0 | 22-May-95 |
| K1 DETECTOR (Large Solenoid) | 1-Oct-90 | 99.1 | 31-Dec-98 |
| FUND ENG. DESIGN & SPECIF. R&D | 1-Oct-90 | 0 | 1-Oct-90 |
| + STEEL | 2-Jan-91 | 78.3 | 9-Jul-97 |
| + COIL | 1-Oct-90 | 89.1 | 2-Mar-98 |
| + MUON CHAMBER | 1-Oct-90 | 77.3 | 8-Mar-97 |
| LIQUID ARGON CALORIMETER | 1-Oct-90 | 83.1 | 2-Sep-97 |
| + LAC Modules | 1-Oct-90 | 68.1 | 2-Jun-96 |
| + LAC Cryostat | 31-Mar-91 | 77.1 | 2-Sep-97 |
| INTERNAL DETECTOR | 1-Oct-90 | 99.1 | 31-Dec-98 |
| Internal Detector Specifica | 1-Oct-90 | 9 | 30-Jun-91 |
| + Vertex Chamber | 1-Jul-91 | 60 | 30-Jun-96 |
| + Central Tracker | 1-Jul-91 | 66 | 29-Dec-96 |
| + Internal Detector Assembly | 3-Mar-98 | 10 | 31-Dec-98 |
| DETECTOR OPERATIONAL | 2-Jan-99 | 0 | 2-Jan-99 |

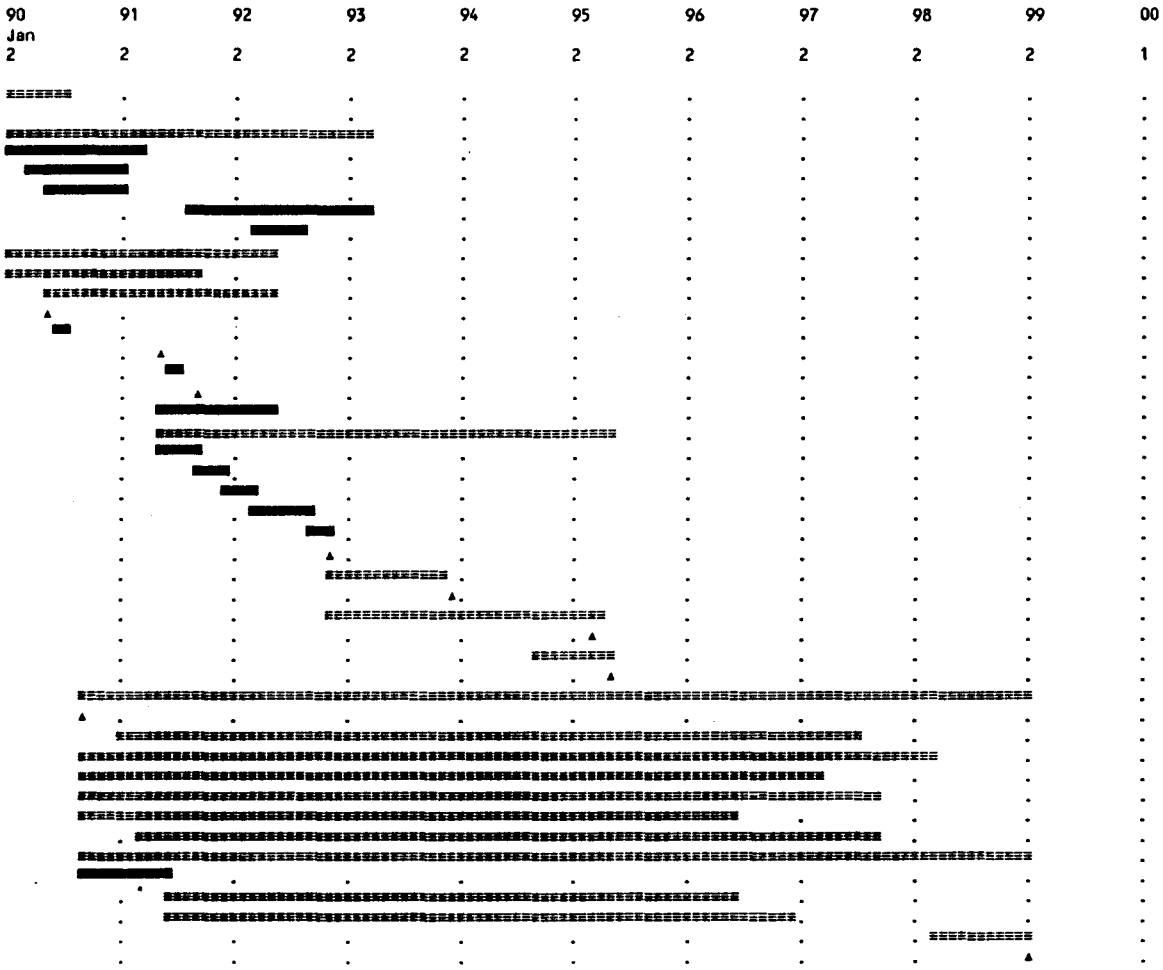


Detail Task  Summary Task  Milestone

**Schedule K1 - 4**

# CHAPTER 3

# THE GENERIC SSC EXPERIMENTAL PROGRAM

In order to study the impact of experimental support facilities on detector construction, we have arbitrarily selected a complement of "generic" detectors from those studied at various workshops and from the "Report of the Detector Cost Model Advisory Panel" (DCMAP), published as part of the "Cost Estimate of Initial SSC Experimental Equipment" (1). This variety of detector configurations reflects different needs for support facilities while representing a feasible, balanced initial experimental program for the SSC. With the exception of the detector designed for studies of bottom quark decays, all are general-purpose, 4-$\pi$ systems intended for broad-based physics research. They include two new detectors using complementary (magnetic and nonmagnetic) approaches to SSC investigations and an upgraded design of an existing detector. Our intent was to consider a variety of detection techniques representing many challenges in development and assembly, in order to anticipate the many potential technical issues we will confront in developing and building the real detectors. For example, the coil suggested for the large magnetic detector may not be transportable, so would require facilities for building it at the experimental site.

## 3.1 Large Solenoid Detector Model (LSD)

The Large Solenoid Detector Model (LSD) was developed at the 1988 Berkeley Workshop (2). It must be capable of operating at the SSC design luminosity of $10^{33}$ $cm^{-2}s^{-1}$. The parameters and characteristics were chosen based on present estimates of the requirements for studying heavy quarks, supersymmetry, heavy Higgs particles, WW scattering at large invariant masses, new W and Z bosons, and very-large-momentum-transfer, parton-parton scattering. The goal is to obtain optimum detection and identification of electrons, muons, neutrinos, jets, Ws, and Zs over a large rapidity region. The primary region of interest extends over ± 3 units of rapidity, although the calorimetry extends to ± 5.5 units to obtain optimal missing energy resolution.

A magnetic field was incorporated because of the importance of identifying the signs of the charges for both electrons and muons and to add the possibility of identifying $\tau$ leptons and secondary vertices. A magnetic field may also prove useful for studying as-yet undiscovered physics processes. Since hermeticity of the calorimetry is extremely important, the entire central and end cap calorimeters were placed inside the solenoid. This does not at the moment seem to produce significant problems (although many issues remain to be resolved) and in fact yields a very effective muon detector in the central region.

The decision to build all of the calorimetry inside the solenoid coil has profound consequences. The coil must be large (8.7 × 16 m) and able to carry a large weight inside the bore (5000 tons). However, restrictions on the thickness of the coil can be relaxed because the coil will no longer interfere with the energy measurement or affect the e/h signal ratio. Muon tracking chambers can be placed just outside the coil because there is sufficient absorber to reduce the hadron shower. The flux return yoke can now be utilized not only for flux return but for muon identification and a redundant momentum measurement of the muon as well.

Figures 3-1 and 3-2 show the major components of the LSD. Details of weights and sizes are provided in Table 3-1. The coil extends from a radius of 4.1 m to 4.6 m. The magnetic field in the bore is 2 T, providing for magnetic analysis of exiting muons over a field integral of 8 T-m. The flux return steel yoke extends radially from 5.1 m to 7.1 m.

Calorimetry is the central element of the LSD, providing precision measurement of electrons, jets and missing $p_T$. A recent engineering study (3) has provided a detailed model and proof of principle for the technology favored at present: liquid argon with uranium absorber. The model is shown in Figure 3-3. For our purposes in this study, only the gross weights and sizes were used, but the impact of assembling such a device has led us to consider variations of the hall with additional assembly space. Also, work has begun on the facilities required for support of the liquid argon system, such as storage dewars, gas sumps, and accessory equipment, which are included in Option C. (See Chapter 6.)

The goal of the muon detector system in the Large Solenoid Detector is to identify and measure the vector momenta of muons between about 10 GeV/c and 2 TeV/c and over a rapidity range of ± 5 units. The system chosen in this detector takes strong advantage of the fully integrated functional nature of the Large Solenoid Detector, integrating the muon momentum measurements with the central tracking detector, the large solenoid magnetic flux return yoke and the hadron calorimetry (all within the solenoid coil). Muons at small angles (less than about 30 degrees) are measured by means of conventional magnetized iron toroids placed around the beam pipe and shaped to permit muon momentum measurements at all angles down to 0.8 degrees.

Table 3-1
Dimensions of the Large Solenoid Detector

| | Weight (t) | Inner Radius[a] (m) | Outer Radius[b] (m) | Length (m) | Z1[c] (m) | Z2[d] (m) | Number of Channels |
|---|---|---|---|---|---|---|---|
| Inner Vertex Chamber | | 0.02 | 0.15 | 0.30 | | | |
| Tracking | 2 | 0.40 | 1.60 | 8.00 | | | 40,000 |
| Central Electromagnetic Calorimeter | 200 | 1.60 | 4.10 | 8.00 | | | 161,500 |
| Forward Electromagnetic Calorimeters (2) | 70 | 0.15 | 2.20 | | 17.00 | 17.50 | 91,200 |
| Central Hadronic Calorimeter | 4,800 | 0.70 | 4.10 | | | | 42,000 |
| Forward Hadronic Calorimeters (2) | 1930 | 0.75 | | | 17.50 | 20.00 | 16,000 |
| Coil | 900 | 4.10 | 4.60 | 16.00 | | | |
| Central Muon Toroid | 19,000 | 4.20 | 7.10 | 21.40 | | | |
| Intermediate Toroid | 10,000 | | | | 11.20 | 15.20 | |
| Forward Toroids (2) | 1,520 | 0.42 | 2.50 | | 20.00 | 25.00 | |
| Muon Chambers | | | | | | | 100,000 |
| Total | 38,422 | | | 50.00 | | | 450,700 |

[a]Inner radius is the radial distance to the innermost part of the detector element.
[b]Outer radius is the radial distance to the outermost part of the element.
[c]Z1 is the distance from the interaction point along the beam to the nearest part of the element.
[d]Z2 is the distance from the interaction point along the beam to the farthest part of the element.

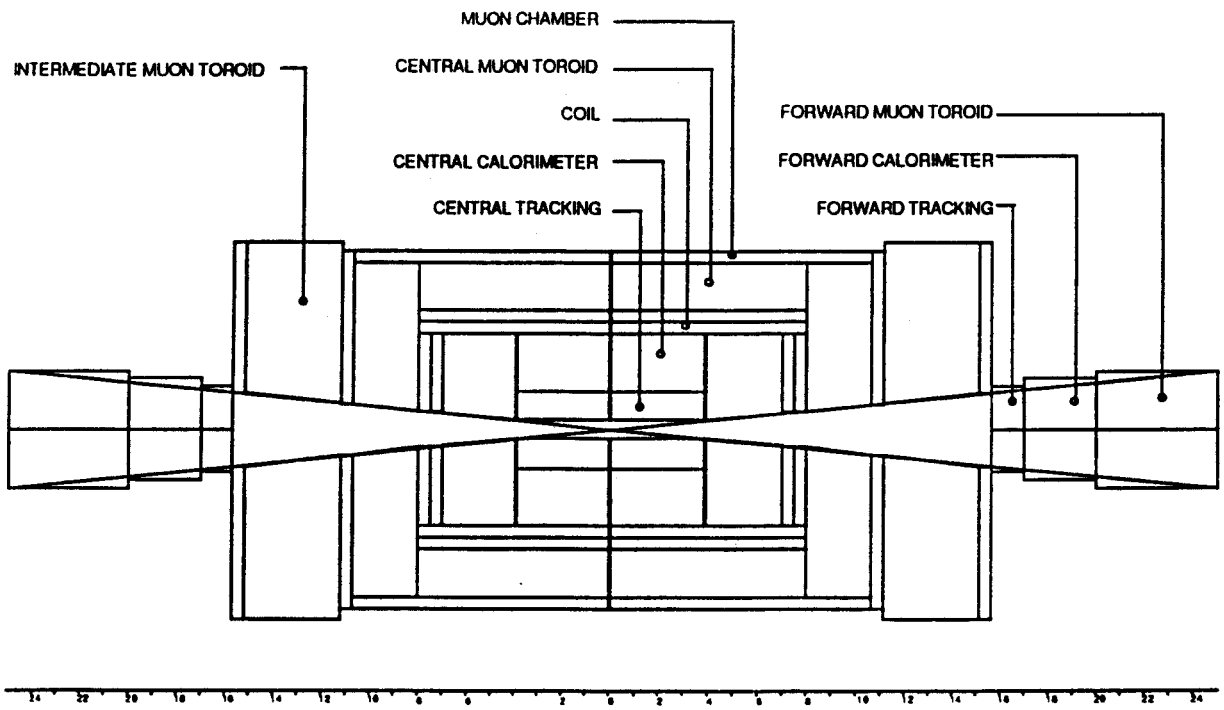


**Figure 3-1. Major components of the large solenoid detector.**

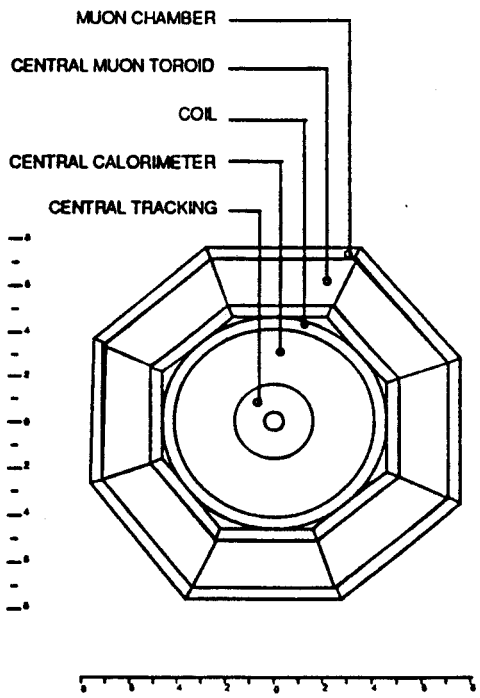


**Figure 3-2. End view of the large solenoid detector.**

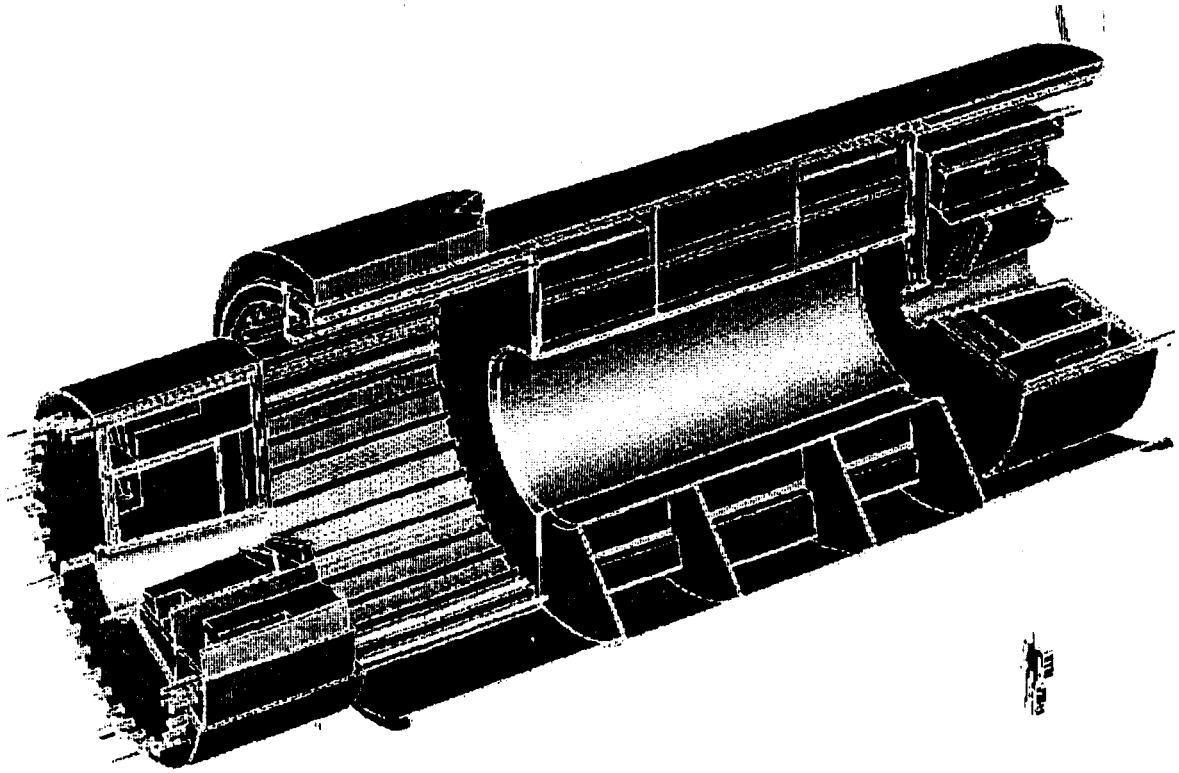

**Figure 3-3. Calorimeter of the LSD detector, with man for scale.**

Dimensions of the major components were established using sketches from the proceedings of the 1986 Snowmass Summer Study (4) as a starting point, followed by discussions of how to move outer detector components to obtain access to inner detector components and electronics for maintenance. In addition, some aspects of mechanical support were taken into consideration where they might affect the basic dimensions. It should be emphasized that the viability of the various mechanical supports for large components of the detector (e.g., the iron yoke) has not been established; determination of that awaits a true engineering design for these components.

The LSD is an example of the largest and heaviest detectors expected to be built at the SSC, and its collision hall will likely have the greatest span (transverse to the beamline) and height, though not necessarily the greatest length along the beamline.

In order to model the collision hall, shafts, and other facilities associated with the LSD, this study makes a number of assumptions regarding the detector's basic dimensions, its maintenance and minor repair needs, assembly sequence, and the interface of its operation with that of the SSC. We assume that the detector will be built in place on the beamline. The iron support yoke, except for the end caps, will remain permanently anchored in place. The intermediate toroids will be split vertically so that they may be moved sideways and then away from the interaction point to allow the end cap to be retracted. The end cap may

then be retracted for personnel access to the central tracking chambers, the vertex detector, and the ends of the barrel calorimeter. The forward/backward tracking system, calorimetry system, and muon systems remain fixed.

The floor level beneath the iron yoke is about 1 m below the muon-tracking apparatus attached to the yoke; consequently, the floor is 9.5 m below the beam centerline. Also, the forward end of the inner low-$\beta$ quadrupole is 21.8 m from the interaction point to accommodate the spatial requirements for retracting the end cap.

## 3.2 Bottom Collider Detector Model (BCD)

The Bottom Collider Detector (BCD) is a dedicated bottom quark experiment for the SSC. The experiment is to study CP violation in the bottom quark decay system, and also complete studies begun at $e^+e^-$ accelerators and low-energy hadron experiments at Fermilab and at CERN. It is an example of a non-4-$\pi$ experiment — special purpose, yet large and challenging — and gives balance to this generic program. (See Table 3-2 and Figure 3-4.)

Table 3-2
Dimensions of the Bottom Collider Detector

| | Inner Radius[a] (m) | Outer Radius[b] (m) | Length (m) | Z1[c] (m) | Z2[d] (m) |
|---|---|---|---|---|---|
| Magnet 1 | 2.0 | 5.0 | 5.0 | –2.5 | 2.5 |
| Magnet 2 | 2.0 | 4.0 | 3.0 | 12.0 | 15.0 |
| Instrumented steel 1′ | 0.1 | 5.5 | 4.0 | –6.0 | –10.0 |
| Instrumented steel 1 | 0.1 | 5.5 | 4.0 | 6.0 | 10.0 |
| Instrumented steel 2 | 0.1 | 4.1 | 10.0 | 30.0 | 40.0 |
| RICH 1′ | 0.1 | 3.0 | 1.5 | –3.0 | –4.5 |
| RICH 1 | 0.1 | 3.0 | 1.5 | 3.0 | 4.5 |
| RICH 2 | 0.1 | 2.0 | 2.0 | 16.0 | 18.0 |
| RICH 3 | 0.1 | 3.1 | 4.0 | 23.0 | 27.0 |
| Tracking 1′ | 0.1 | 3.0 | 0.5 | –4.5 | –5.0 |
| Tracking 1 | 0.1 | 3.0 | 0.5 | 4.5 | 5.0 |
| Tracking 2 | 0.1 | 1.9 | 0.8 | 10.5 | 11.3 |
| Tracking 3 | 0.1 | 2.5 | 4.0 | 19.0 | 23.0 |
| Tracking 4 | 0.1 | 3.1 | 1.0 | 27.0 | 28.0 |
| TRD 1′ | 0.1 | 3.0 | 0.3 | –5.0 | –5.3 |
| TRD 1 | 0.1 | 3.0 | 0.3 | 5.0 | 5.3 |
| TRD 2 | 0.1 | 3.1 | 1.0 | 28.0 | 29.0 |
| E&M 1′ | 0.1 | 3.2 | 0.7 | –5.3 | –6.0 |
| E&M 1 | 0.1 | 3.2 | 0.7 | 5.3 | 6.0 |
| E&M 2 | 0.1 | 3.1 | | 29.0 | 30.0 |
| Total | | | 50.0 | –10.0 | 40.0 |

[a]Inner radius is the radial distance to the innermost part of the detector element.
[b]Outer radius is the radial distance to the outermost part of the element.
[c]Z1 is the distance from the interaction point along the beam to the nearest part of the element.
[d]Z2 is the distance from the interaction point along the beam to the farthest part of the element.

The goal of the BCD at the SSC is to produce $10^{12}$ bottom decays at a luminosity in excess of $10^{32}$ $(cm^2s)^{-1}$. The trigger efficiency of the detector is at least 5 percent. With a combined acceptance and vertex reconstruction efficiency of 20 percent, a sample of a million

reconstructed events is obtained for a mode with $10^{-4}$ branching ratio. A sample this size, in each of several few-body decay channels, permits a detailed study of CP nonconservation in the B-Bbar system. A decay mode with a $10^{-8}$ branching ratio yields 100 events, so that rare decay processes can also be studied. This provides the best possible determination of the elements of the K-M matrix.

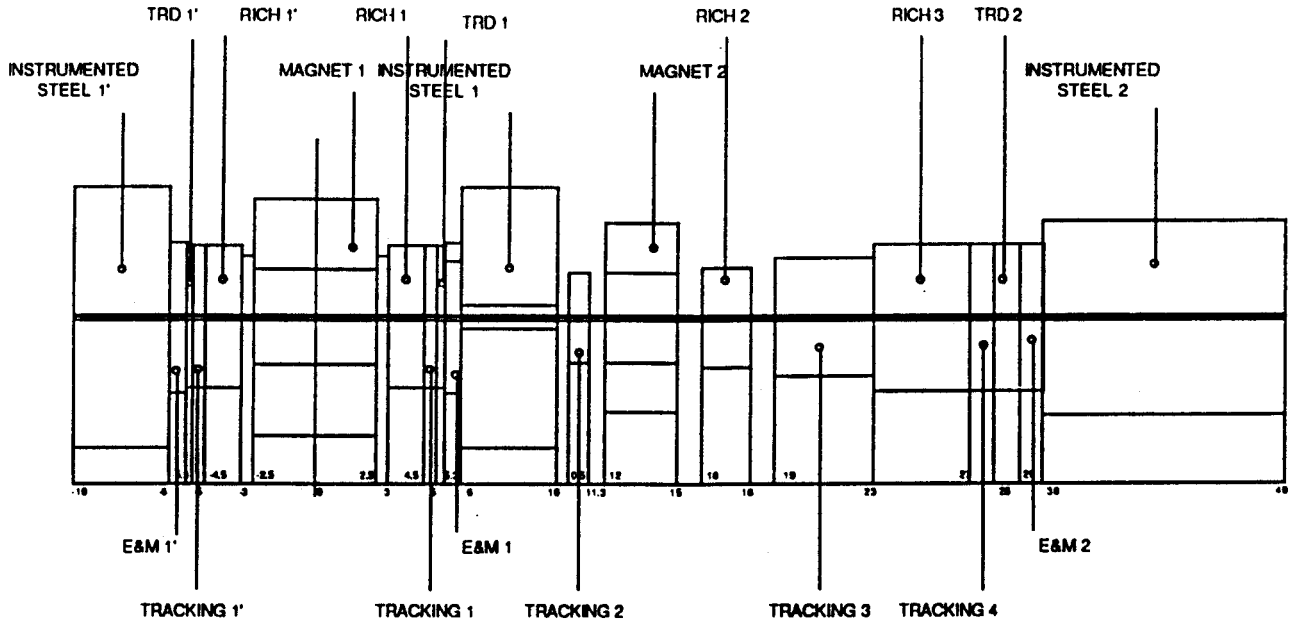


**Figure 3-4. The Bottom Collider Detector.**

The SSC will be unique in that the production ratio of B pairs to background events will be about 1 percent, far in excess of that attainable at other accelerators. Along with a high production cross section of about 100 microbarns, the BCD detector would provide the highest statistics attainable anywhere.

The detector described here is based on work done at several SSC workshops (2, 3) and on a proposed experiment at FNAL (4, 5) that could be upgraded to form the core of the BCD. The detector design provides for large angular acceptance, good momentum resolution for predominantly low-energy tracks, precision location of the vertex, and particle identification. Calorimetry is important for electron identification. Coarse hadron calorimetry is also used.

The detector is based on a dipole magnet geometry. The interaction region is at the center of the dipole, which has an active volume of $4 \times 4 \times 4$ m$^3$. The outside dimensions of the dipole are $12 \times 10 \times 5$ m$^3$. The magnet weighs 4500 tons, but individual pieces of the magnet weigh no more than 80 tons. The magnet coils, consisting of four doughnut-shaped

sections weighing about 35 tons each, are superconducting. The field integral for the magnet is 4 T-m.

The heart of the experiment is in the silicon vertex detectors located around the interaction region. This part of the detector, approximately 1 m long and 3 cm in radius, yields 10-μ spatial resolution and three data points per track coming from the vertex.

The experiment contains a highly instrumented forward detector as well as a similarly instrumented region between the pole pieces. The forward detector is further divided into two parts: a region between 5 and 25 degrees of the beam axis, a region that is instrumented on both ends of the main magnet, and a region between one and five degrees. All three regions are instrumented in the same way: vertex detection surrounded by straw tube tracking first, Ring-Imaging Cerenkov (RICH) detectors for particle identification next, followed by Transition Radiation Detectors (TRDs), and finally electron calorimetry and muon detection. The forward arm has an additional magnet spectrometer that also acts to compensate for the magnetic field of the central dipole for the accelerated beam.

This geometry dictates the sequence of installation of the detector elements. For the main dipole, the heavy elements near the pole pieces must be installed first, and the most delicate element, the vertex detector, must be installed last. The calorimeter modules are installed first, followed by the TRDs, then the straws, and finally the vertex detector. The sequence for installation in the forward and intermediate arms is again the same, because the heavy elements must be installed before the more delicate elements can be brought in.

The muon detectors deserve special mention. The two muon detectors in the intermediate region contain a total of about 1300 tons of steel, while the instrumented steel in the forward arm weighs 1800 tons. The portion of the muon detector that faces the IR is more highly instrumented and is to serve as coarse hadron calorimeters. During the installation process in this model, the instrumented steel is inserted in the detector hall first, even as the dipole magnets are constructed in the assembly hall. The dipole magnet in the forward arm is inserted next. The detector elements are inserted in the gap of the main dipole and in the forward and intermediate arms. Finally, the main dipole is brought into the detector hall from the assembly area.

The dimensions of the BCD in Table 3-2 are also in references 5 and 6. Various component supports, extending to floor level, have been added. Some components will have individual supports, and some will be grouped together onto a common base.

The most important assumption made for construction of the BCD model is that major sections of the detector may be constructed, repaired, or upgraded in a shielded below-ground assembly area while the SSC is operational. The most intricate major section of the detector is the center dipole magnet and the associated detector elements. The 2500-ton weight of this section allows it to be moved out of the collision hall with no disassembly. Other parts of the detector could be removed through access ways into the assembly area. It is assumed that some parts of the detector, such as the muon toroids, would not ordinarily be removed from the collision hall.

## 3.3 Upgraded DØ Detector Model

The DØ detector is a nonmagnetic general detector designed primarily for detection of electrons, muons, jets and missing transverse energy. Particular attention has been given to the design of good uranium-copper/liquid argon calorimetry without projective cracks.

The original concept for an upgraded DØ, called D1, was reported at the 1984 Snowmass SSC summer study (7). We do not comment here on the relative merits of using a pre-existing detector, or the difficulties of moving such a device 1,000 miles. We use the same parameters for an upgraded DØ detector as those described in the DCMAP report (1). (See Table 3-3 and Figure 3-5.)

Table 3-3
Dimensions of the DØ Upgrade Detector

| | Weight (t) | Inner Radius[a] (m) | Outer Radius[b] (m) | Length (m) | Z1[c] (m) | Z2[d] (m) | Number of Channels |
|---|---|---|---|---|---|---|---|
| Inner Vertex Chamber | | 0.05 | 0.17 | 1.00 | | | 14,000 |
| Transition Radiation Detector | | 0.17 | 0.50 | 2.00 | | | 15,000 |
| Central Drift Chamber | | 0.50 | 0.75 | 2.70 | | | 40,000 |
| Forward Drift Chambers | | 0.07 | 0.40 | | 1.15 | 1.40 | 42,000 |
| Central LA[e] Calorimeter | 350 | 0.75 | 2.60 | 2.61 | | | 16,000 |
| End Cap LA[e] Calorimeters (2) | 900 | 0.05 | 2.60 | | 1.70 | 4.25 | 24,400 |
| Central Catcher Calorimeter | 1,300 | 3.00 | 4.10 | 7.30 | | | 330 |
| End Cap Catcher Calorimeter | 1,100 | 0.40 | 4.00 | | 4.35 | 5.90 | 680 |
| Central Muon Toroid | 7,860 | 4.20 | 6.20 | 12.00 | | | |
| End Toroids | 7,000 | 0.42 | 6.20 | | 6.00 | 9.00 | |
| Muon Chambers | | | | | | | 100,000 |
| Total | 18,510 | | | | | | 252,410 |

[a]Inner radius is the radial distance to the innermost part of the detector element.
[b]Outer radius is the radial distance to the outermost part of the element.
[c]Z1 is the distance from the interaction point along the beam to the nearest part of the element.
[d]Z2 is the distance from the interaction point along the beam to the farthest part of the element.
[e]LA is liquid argon.

The main deficiencies of the DØ for SSC use are (l) insufficient granularity of tracking cells for the high-rate environment, (2) calorimeter depth too shallow for SSC energies, (3)

too little iron toroid depth to give clear muon signatures and muon sign determination in the multiTeV range, and (4) front-end electronics and trigger system too slow by SSC standards.

To improve the hadronic calorimetry, a coarse Fe-sampling calorimeter section would be added behind the present liquid argon devices. This steel would be the first section of the muon momentum system (i.e., magnetized). Interspersing 15 layers of chambers in the Fe-catcher section would give about 6-cm sampling (1/3 $\lambda_0$). The space occupied and iron weight involved would be almost identical to the present DØ muon toroid system.

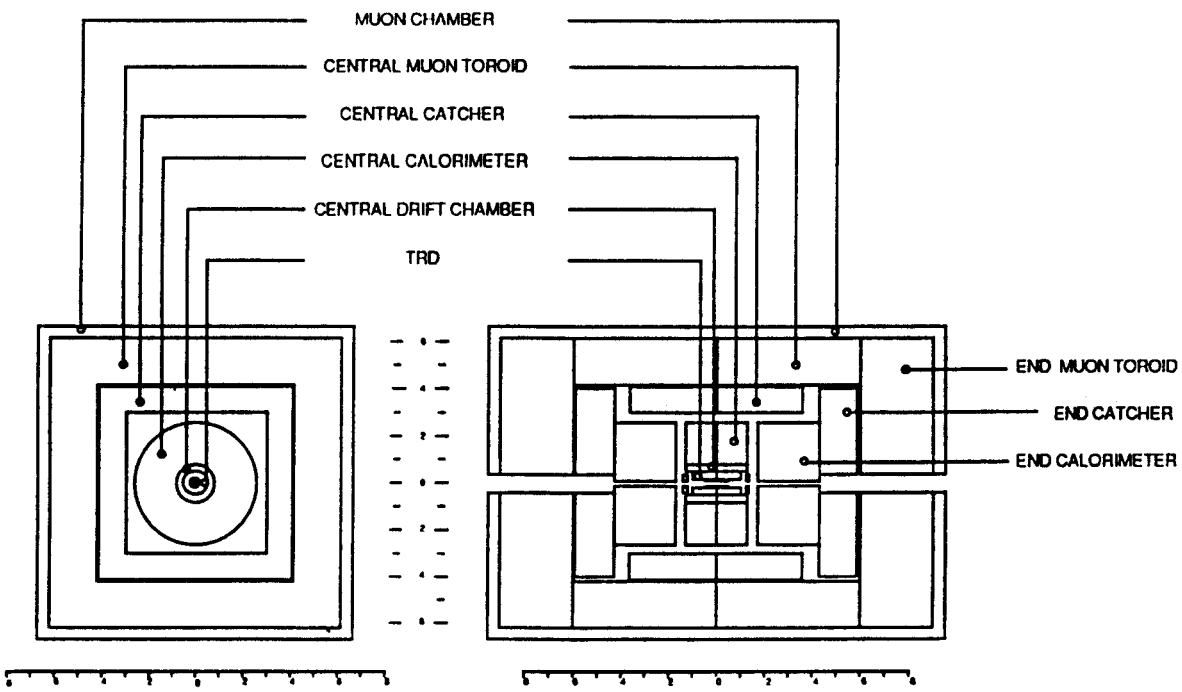


**Figure 3-5. The Upgraded DØ Detector.**

A new muon toroid system would be added, together with the associated wire chambers for measurement of muon trajectories outside the steel. The first meter of magnetized steel would reside in the catcher section of calorimetry. There would be an addition of central and (two) end iron toroids with a geometry simply expanded from the present DØ design. The muon iron is separated into 1-m-thick shells to give one (central) or two (end) intermediate measurements on muon trajectories.

The present DØ liquid argon calorimeters are modeled with the assumption that they would be rebuilt to incorporate new, faster electronics for the SSC. The schedule assumes they would be completely disassembled and reassembled in Texas.

We follow the design of the Snowmass DI tracking chamber in specifying 20 layers of sense wires (2-mm spacing) for the inner vertex chamber and 20 and 28 layers (4 mm spacing)

in the outer and forward chambers, respectively. Charge division is used for orthogonal coordinate readout.

The TRD system needs new chambers as well; wire spacings need to be reduced to the minimum to control multiple hits and fine cathode pad readouts should be incorporated to give space-point measurement.

We have assumed that the new muon toroid system would be built in place, while the catcher and calorimetry would be built on a platform and rolled into the toroids. This is the construction method for DØ, and the hall design parallels the features of the DØ hall.

## 3.4 Nonmagnetic Detector Model (NMD)

The concept of a general-purpose nonmagnetic detector was developed at the 1988 Berkeley Workshop (2) and is modeled here. The primary thrust of such a detector is to put the highest priority on the calorimetry system, without reliance on a magnetic field to augment measurements of particle momenta and to assist in particle identification. This philosophy has been represented by UA2 at CERN and DØ at Fermilab. By employing a combination of track-matching, calorimetric longitudinal and transverse shower profile measurements, and TRD information, the detector is capable of superior electron identification. It has an excellent muon identification and measurement system. In addition it allows the use of an optimized calorimeter that is not compromised by the requirements of a large magnetic field.

This detector is shown schematically in Figure 3-6 and its components are listed in Table 3-4. The philosophy for assembly of this detector underground assumes that the major parts of the muon iron toroids would be assembled in place on the beam line, while the catcher and precision calorimetry would be prepared in an assembly garage and moved into and retracted from the IR.

Table 3-4
Dimensions of the Nonmagnetic Detector

| | Weight (t) | Inner Radius[a] (m) | Outer Radius[b] (m) | Length (m) | Number of Channels |
|---|---|---|---|---|---|
| TRD | | 0.30 | 0.80 | 2.40 | 340,000 |
| Calorimeter | 1,600 | 0.80 | 2.60 | 12.40 | |
| Catcher | 1,500 | 2.90 | 4.00 | 14.40 | 200,000 |
| Muon toroids | 10,500 | 4.00 | 6.20 | 20.40 | |
| Drift chambers | | 6.20 | 7.50 | 25.00 | 120,000 |
| Total | 13,600 | | | | 660,000 |

[a]Inner radius is the radial distance to the innermost part of the detector element.
[b]Outer radius is the radial distance to the outermost part of the element.

The main features of the detector as described in the Berkeley Workshop include a tracking region augmented by a TRD system to provide better electron identification; a calorimetry system extending from beampipe to beampipe; and an external system of

magnetized iron toroids, proportional drift tubes for tracking muons, and scintillators for triggering on muons. In order to provide a different focus for calorimetry, we have assumed here that the calorimetry technique used is that of room-temperature liquid ionization devices, a prototype of which is being implemented for the UA1 upgrade at CERN. The precision calorimetry using this technique is augmented with coarse calorimetry consisting of instrumented iron plates, called the "catcher" calorimetry, which provides a measurement of the leakage of hadron showers and further suppresses the muon background from punchthrough.

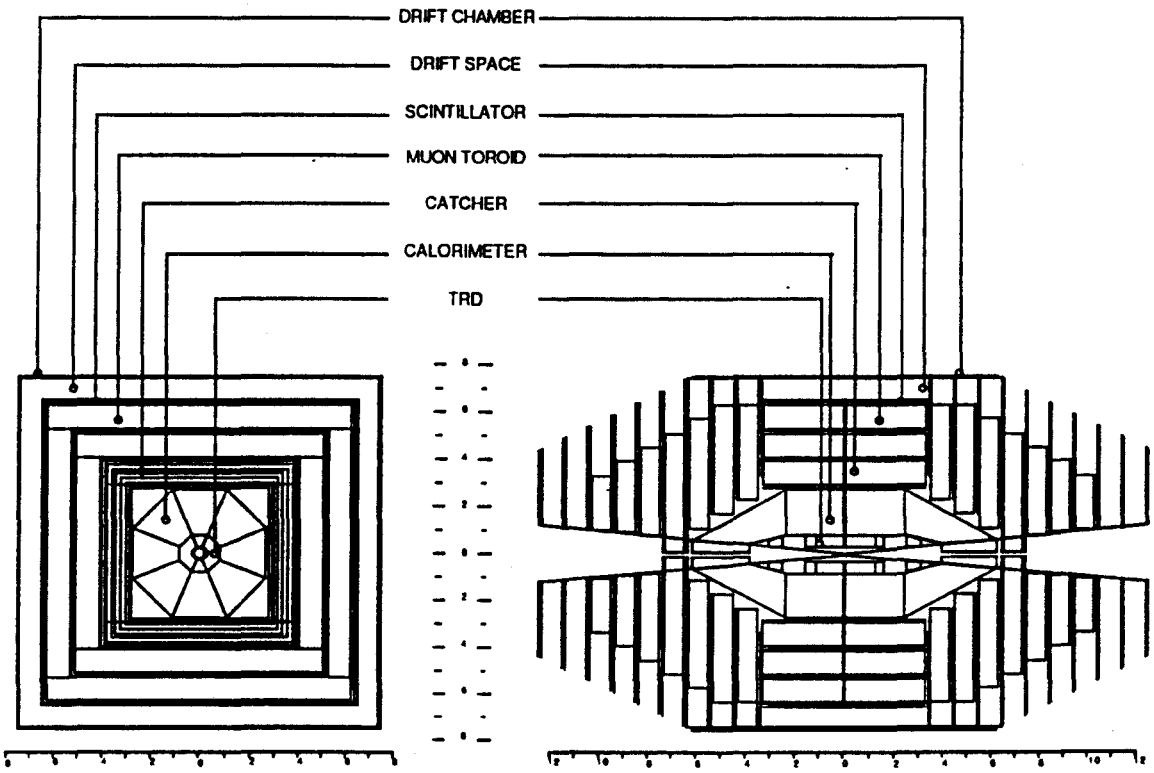


**Figure 3-6. The Nonmagnetic Detector**

## References

1. Cost Estimate of Initial SSC Experimental Equipment, SSC Central Design Group Report No. SSC-SR-1023 (1986).
2. Proceedings of the Workshop on Experiments, Detectors, and Experimental Areas for the Supercollider, R. Donaldson and M. Gilchriese, eds., World Scientific, Berkeley (1988).

3. Adams et al., Status Report on a Reference Engineering Design Study of Hermetic Liquid Argon Calorimetry for the SSC, Proceedings of the SSC Workshop on Calorimetry, Alabama, 1987 (in press).

4. Proceedings of the 1986 Division of Particles and Fields Summer Study on the Physics of the Superconducting Super Collider, June 23–July 11, 1986, Snowmass, Colorado; R. Donaldson and J. Marx, eds. (1986).

5. Proceedings of the Summer Study on High-Energy Physics in the 1990s, F. Gilman, ed. (1989).

6. Letter of Intent for the BCD — A Bottom Collider Detector for the Fermilab Tevatron (1988).

7. Proceedings of the 1984 Division of Particles and Fields Summer Study on the Design and Utilization of the Superconducting Super Collider, June 23–July 11, 1984, Snowmass, Colorado; R. Donaldson and J. Morfin, eds. (1984).

# CHAPTER 4

# CONSTRUCTION SCENARIOS

## 4.1 Introduction and Site Overview

Based on the Texas proposal (1) and the parameters of the generic detector models, we have developed a first approximation of model site-specific drawings, construction techniques, and schedules. The construction procedures and descriptions will be modified to accommodate different approaches and improved knowledge of the bedrock strata, as well as changes in the site layout and detector placement for the experimental program when it is approved. As discussed below, the local geology and experience indicate that cut-and-cover or open-pit construction techniques rather than underground cavern construction will be used for excavation of the experimental halls.

Six potential interaction regions are planned for the SSC as portrayed in the CDR, four of which will be developed for the first phase of operation. (See Figure 1-2.) The detectors, described in Chapter 3, were arbitrarily placed at the four IRs as follows: the Large Solenoid Detector (LSD) in experimental hall K1; the Nonmagnetic Detector (NMD) in experimental hall K2; the Bottom Collider Detector (BCD) in experimental hall K5; and the DØ Upgrade Detector (DØ) in experimental hall K6. K1 and K2 are located in the "near" cluster on the west side of the ring, and K5 and K6 in the "far" cluster to the east (as are future halls K3 and K4) as shown in the keyplan, Drawing G-01 (in the appendix following Chapter 7).

## 4.2 Site Subsurface and Surface Features

The SSC tunnel, shaft, and hall complex is located in Austin Chalk, Taylor Marl, and, assuming its present alignment (from the Texas Proposal), touches the upper member of the Eagle Ford Shale in certain regions. The subsurface sections for each of the four hall locations are indicated schematically in Drawing G-02. The site is overlain by comparatively shallow overburdens normally less than 10 m deep. Some local superficial water tables are present in the overburdens, but the host rocks themselves are unsaturated.

## 4.3 Main Geotechnical Support Criteria

The support methods proposed for the cut-and-cover operation are considered to be appropriate for the site conditions as presently known. Further site investigations and design study will be necessary before a final set of support mechanisms are adopted for the individual needs of the IRs.

### 4.3.1 Topsoil / Weathered-Rock Support Considerations

In the vicinity of the near cluster, only limited topsoil is present above the chalk. Bedrock weathering is also limited. At K1 and K2 the combined depth of these overburden materials is 2–3 m. Above the intact marl at K5 and K6 in the far cluster, alteration has been more extensive and a topsoil/weathered rock combined thickness of 10–12 m may be present. Slopes in both materials will be laid back and stabilized away from the open pit edge using angles of 30 to 45 degrees from the horizontal.

### 4.3.2 Rock Support Considerations

**Austin Chalk**

The Austin Chalk (AC) is a relatively competent soft rock, yet some spalling (superficial deterioration of the rock, leading to small-scale rock falls) will occur if the rock is left exposed for extended periods, i.e., more than six months. A thin shotcrete layer (nominal thickness 2 in.), possibly incorporating steel reinforcement, should eliminate this problem and allow vertical temporary support walls to be maintained. Local stabilization of blocking or wedging in the vertical benching (8 m high with 2-m berm) and hall sidewalls may be necessary, owing to the intersection of bedding planes, joints and/or faulting (normally tight) in the excavation faces. Slope stability can be achieved by active, fully bonded rock bolting placed around the potential blocking areas. A light bolting pattern will be used in the main hall cuts. Some local treatment of the bentonite and weaker shale bedding may also be necessary, using a combination of a thicker reinforced shotcrete layer and a light pattern of rock bolting.

In the event that a cavern excavation were attempted, a heavy systematic roof support system and staged roof excavation would be required. This is particularly necessary given the presence of shale and bentonite layers. More detailed site investigation will be necessary to determine if the overlying strata can support roof spans of up to 30 m.

**Eagle Ford Shale**

The Eagle Ford Shale (EFS) is "soft" and an order of magnitude less rigid than the AC. The rock is very susceptible to alteration if left exposed to air and/or water. Great

care is necessary to protect and support the rock against the onset of alteration, which would jeopardize sidewall and foundation stability. No faulting has been observed in the rock but the material has a pronounced laminated structure.

Where the detectors are founded on EFS, in-situ support measures will be necessary to increase the rigidity of the rock matrix (elastic deflections of up to 6 in. are indicated from finite-element calculations). Drilled-out, cast-in-situ piling is used in the construction models to reduce elastic deflections to a more acceptable level.

**Taylor Marl**

Taylor Marl (TM) is a soft rock. The weaker, less calcareous zones within the formation are particularly susceptible to alteration if left exposed to air and/or water. Care should be taken to support and protect the excavation surfaces against alteration that would jeopardize ground stability. Some discontinuity planes are present within the rock matrix but these are likely to be tight. In the 60-degree pit and ramp slopes, which are required for cut-and-cover operations (8 m high, 2 m wide), local rock bolting should provide the required support against possible planar or wedge failures. Systematic rock bolting will be necessary to reinforce the rock in the vertical hall cut. Rapidly applied reinforced shotcrete will be used on all exposed profile surfaces.

Given the weak and variable nature of the TM, the use of cavern excavation techniques has not been analyzed. Once further site investigation has been carried out, cavern models may be developed if site conditions appear more conducive to underground excavation.

### 4.3.3 Ground Monitoring

Given the delicate nature and large scale of the excavation works, it will be necessary to install in-situ monitoring equipment around the openings to study the behavior and evolution of the rock mass movement as a function of time and excavation phase. The monitoring should begin prior to excavation and maintained for the life of the structure wherever possible. Such monitoring will allow the performance and stability of the various rock structures to be followed and the applied support mechanisms optimized.

Monitoring in the areas of slope stability, ground convergence, lining stresses, and groundwater will also be required. (On the subject of groundwater monitoring, see the Supplemental Environmental Impact Statement for the SSC (2), currently in preparation.)

## 4.4 Construction Sequences

The cut-and-cover and cavern options for the construction sequence are illustrated by two sets of "cartoons," drawings K1S1-01, -02, and -03, and K1S2-01, -02, and -03, respectively. The K1 construction models and schedules (cut-and-cover and cavern) were developed using

the support procedures outlined above. The cut-and-cover structures for the IR halls K2, K5, and K6 were developed and schedules made using the same basic construction principles.

A cavern construction option for K1 was presented previously (3). While this report focuses on cut-and-cover excavation, the essential steps of the K1 cavern option are reproduced below for comparison. Further structure-specific site investigation is required before proceeding with development of this model. A cavern option would only be chosen in K1 or K2 if the roof strata of the Austin Chalk were considered sufficiently competent and of adequate thickness to support the required spans.

### 4.4.1 Cut-and-Cover Construction

In this model the main cut is achieved in three steps. Overburden is excavated by scraper and sloped back. Excavation of the rock is made using a ripper-mounted bulldozer, front-end loader, and dump truck. Bedrock overlying the hall is excavated in 8-m benches. Within the hall the walls are vertical for the height of the excavation and supported systematically by rock bolting; mucking to roof level is accomplished by inclined conveyor or similar means when ramping is no longer possible. Durations of the underground construction tasks are shown in Table 4-1.

The various side tunnels associated with the IR structures (main tunnel starters, shaft access tunnels, hall interconnectors, shielding pockets, etc.) are excavated using roadheader equipment from the main hall cut once the level is reached.

The shafts themselves are excavated in two stages. First a mucking hole is drilled to intersect with the access tunnel, and then a slashing operation is carried out in the bedrock from the overburden support level downwards. The shaft collars are sited outside the open cut to avoid interference with the main excavation operations.

In the softer foundation strata piling will be necessary, once an initial protective mud mat has been laid, to limit elastic movement under the detector loading. Full concrete linings will be placed in the floors and sidewalls of the halls, associated tunnels, and shafts. The main hall roof will be placed over the cut, drainage facilities made, and foundations laid for the overlying structure.

The cut-and-cover option suggests quite naturally the erection of a multifloor superstructure in the excavation space immediately above the hall itself; this possibility is shown in Chapter 6. Such a building or structure could, for example, replace some of the surface facilities, and its construction could commence as soon as backfill is in place.

Table 4-1
Task Durations for Underground Construction
(Days)

| Main Host Rocks | Austin Chalk on Eagle Ford Shale | | Taylor Marl | |
|---|---|---|---|---|
| Hall Configuration | K1 Single Long Hall | K6 Single Transverse Hall | K5 Twin Long Halls | K2 Twin Long Halls |
| TASKS | | | | |
| Site Preparation | 30 | 30 | 30 | 30 |
| Topsoil w/Rock Removal | 20 | 30 | 40 | 30 |
| Ramp/Open Pit Rock Excavation & Removal | 75 | 100 | 125 | 100 |
| Reorganization | 10 | 10 | 10 | 10 |
| Hall & Tunnel Excavation & Removal | 100 | 125 | 150 | 125 |
| Mud Mat | 20 | 20 | 30 | 30 |
| Detector Foundations Eagle Ford Shale | 55 | N/A | N/A | 55 |
| Pillow Support (TM) | N/A | N/A | 40 | 20 |
| Floor Slab | 30 | 30 | 40 | 40 |
| Sidewalls & Crane Supports | 60 | 60 | 80 | 80 |
| Roof Placement | 60 | 60 | 100 | 100 |

### 4.4.2 K1 Cavern Options

In the model previously developed (3) the construction shaft is sunk from the surface using conventional drill and blast methods and mechanical techniques. Once in the cavern roof the intersection region is reinforced and the roof drifts developed using roadheader equipment.

The crown is excavated in three lifts down to the gantry crane level. Simultaneously part of the construction shaft is deepened to main-hall floor level and a cross-cut tunnel driven to intersect with the independently drilled personnel shaft, P1 muck-drop.

The roof concrete and gantry rails are placed, the personnel shaft P1 slashed out and the site's fixed mucking facilities installed. Excavation of the main body of the hall is

undertaken by rippers and front-end loader. Excavation of the associated tunnels (main tunnel starters, shaft access, etc.) is done from the main hall by roadheader.

In the softer foundation strata piling will be necessary, once an initial protective mud-mat has been laid, to limit elastic movement under the detector loading. Full concrete linings are made in the floors and sidewalls for the hall, associated tunnels, and shafts.

## References

1. Texas National Research Laboratory Commission, Proposal for the Dallas–Fort Worth Site for the Superconducting Super Collider (1987).
2. Supplemental Environmental Impact Statement for the SSC (forthcoming).
3. RTK. Study of SSC Experimental Hall Concepts Using Model Detectors. Oakland, CA (1988).

# CHAPTER 5

# SURFACE FACILITIES

## 5.1 Introduction

In the model adopted here no facilities are shared between experimental areas. A modular assembly procedure is assumed, with modules being assembled at the surface before being lowered for final assembly in the underground collision halls. At each site, construction facilities would be available for each component of the detector: tracking devices, calorimetry, magnetic coils, muon chambers, iron flux return. For some experiments, other facilities would be available, e.g., the Large Solenoid Detector experiment would have a building for the construction of the large superconducting coil. In addition to the assembly buildings, other facilities would be provided at each site:

- A utilities center for power, water, cooling, ventilation, compressed air, detector gases and cryogenics.
- An office building with control and conference rooms, housing the personnel associated with the experiment (expected to number about 200 at each site).
- A shop building for light machining for construction and maintenance of the detector, with a stock room and receiving area.
- Access buildings at the top of each shaft providing a crane, elevators and emergency stairways.
- Parking space, outside storage areas, access roads and landscaping.

Figure 5-1 is a plan view of site K2. Table 5-1 summarizes the principal parameters for each site. The nomenclature used here is that adopted by DOE in the 1987 Invitation for Site Proposals (DOE/ER-0315, April 1981). While we have assumed that each site has its own facilities, it may later prove more cost-effective to centralize or share facilities between the IRs.

## 5.2 Construction of Surface Facilities

The overall conditions at the SSC site are reasonable in terms of topography, geology and environment. The largely uniform topography will allow expeditious preparation

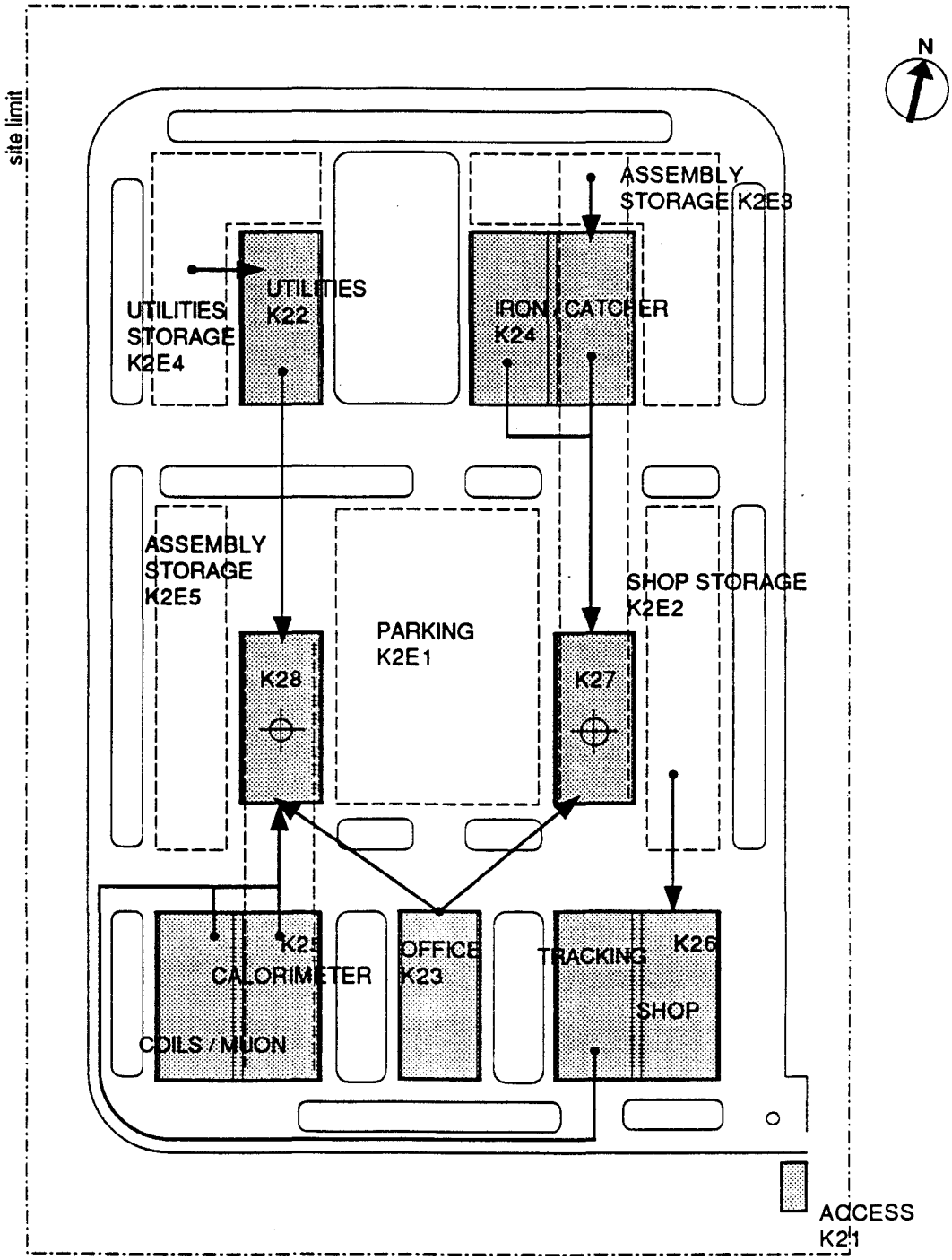


**Figure 5-1. Plan view of site K2 plan.**

Table 5-1
Parameters of the Interaction Regions

| | K 1 | K 2 | K 5 | K 6 | Total |
|---|---|---|---|---|---|
| Experiment | LSD | NMD | BCD | DØ | |
| Personnel | 250 | 200 | 200 | 200 | 850 |
| Buildings | 10 | 8 | 5 | 8 | 31 |
| Buildings Area ($m^2$) | 19,110 | 13,960 | 7,664 | 14,848 | 55,582 |
| Land Required ($m^2$) | 118,320 | 83,622 | 69,354 | 85,808 | 357,104 |
| Power Needs (MW) | 8 | 7 | 5 | 7 | 27 |
| Overhead Cranes | 12 | 7 | 4 | 9 | 32 |
| Elevators | 4 | 4 | 4 | 4 | 16 |

of the sites for construction of the surface facilities. The underground construction at each location will be adapted to the geological conditions at that location. For the ring placement and lattice model in the Texas proposal, there are no houses or farms near any of the four surface facility sites (1). New roads would be required for site access, some existing roads would have to be upgraded, and State Route 879 at site K5 would have to be removed. (See Figure 1-1.)

The local industrial base, notably large cement plants near the site, will provide most of the construction materials required. The construction of the surface facilities could make extensive use of concrete coupled with structural steel frames.

## 5.3 Construction Schedule

Standardization of the facilities will accommodate industrial construction methods and improve the construction schedule: the overall site work at each experimental hall site should take less than a year. However, a second phase of construction including the access buildings located at the top of the shafts cannot start before the completion of the underground facilities.

By decoupling the surface and underground construction in the model schedules presented, construction and preassembly of all the detector components could start about a year after the beginning of construction work on site. (See schedules in Chapter 6.)

## 5.4 Design Issues

The surface and underground facilities were modeled together in order to provide efficient movement for personnel and for detector construction and to minimize the number, size, and locations of access shafts.

In the model adopted, each building uses the same structural grid. This is to ensure adequate space for manipulating large detector pieces (such as calorimetry or iron modules) while keeping the buildings to a reasonable size and cost. Thus, the span of the buildings is 85 ft [26 m], which provides a crane span of 80 ft [24.5 m], covering a width of 66 ft [20 m]. A typical hook height is 26 ft [8 m], leading to a typical building height of 45 ft [14 m]. Exceeding this height would result in much higher costs for construction, air conditioning, heating, lighting, and maintenance.

A second way in which the utility of buildings is optimized in the model while limiting construction and operating costs is by grouping various facilities in a single building whenever possible. For example, the K5 construction and preassembly facilities are located in the same building that houses the office space, as shown in Figure 5-2. However, this strategy can be applied only where functions are compatible; for example, heavy work facilities such as the iron preassembly building cannot be housed with high-precision facilities such as the tracking devices, which require clean rooms and sophisticated electronics. Also, fire-safety considerations may limit the size of multipurpose buildings.

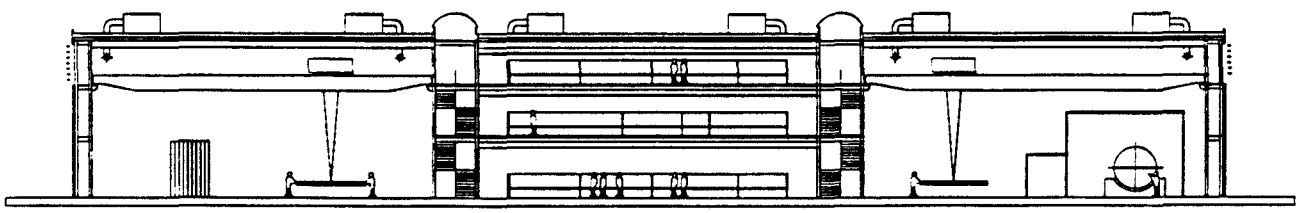

**Figure 5-2. K5 office, construction, and preassembly building.**

## 5.5 Construction Logistics

In this model, construction of the surface facilities and underground facilities would start at about the same time in order to accommodate the overall detector construction schedule. This results in a U-shaped surface site around a large access ramp for the underground cut-and-cover construction. Figure 5-3 shows this arrangement at site K1: The large access ramp from the north provides the main access to the construction area of the

experimental hall about 200 feet below. The surface facilities encircle the excavation area; only the north side of the surface construction area is inaccessible during the first phase. The main access to the surface site is in the south-east corner. A 40-ft [12-m] space separates the surface buildings from the edge of the excavation.

The buildings on east and west sides of the site would be linked by a road at the south end, where the temporary site facilities would also be located. After the first phase of construction, all buildings would be accessible from the partly completed external loop.

At K1, the second phase would start when the large open cut above the collision hall and the construction ramp would be backfilled and the shafts completed. Then the last buildings above the shafts would be built and parking areas and landscaping completed.

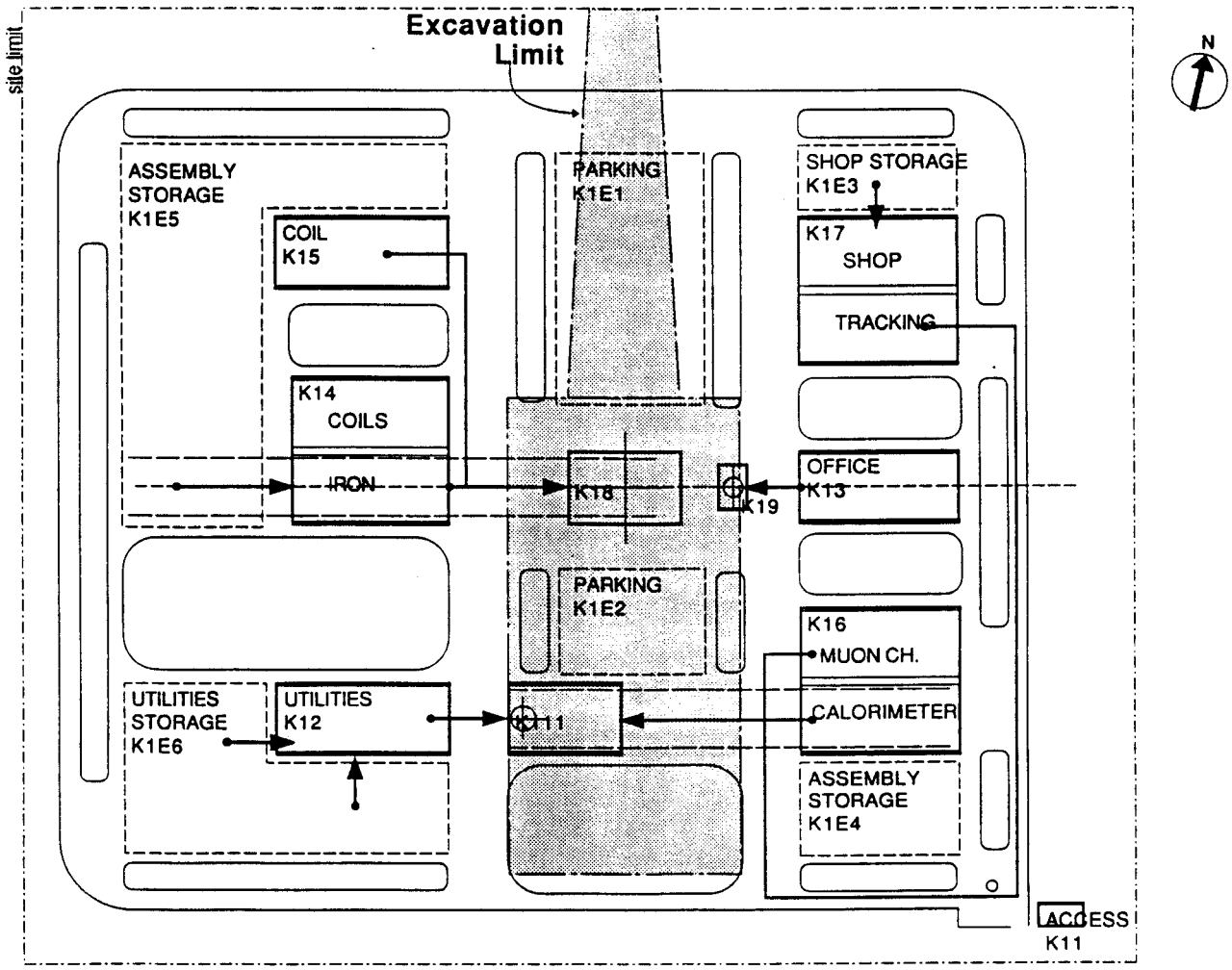


Figure 5-3. K1 construction plan.

## 5.6 Surface Buildings

### 5.6.1 Construction and Preassembly Facilities

Construction and preassembly facilities (Figures 5-4 to 5-6) would be located in large buildings 85 × 185 ft [26 × 56 m$^2$] and equipped with 5-to-100-ton overhead cranes servicing an area 65 × 150 ft [20 × 46 m$^2$]. The hook height would be 26 ft [8 m]. Welding power and conventional utilities would be provided at each building. Truck access to the building through 25-ft-wide by 20-ft-high [8 × 6 m$^2$] doors at both ends is adequate to accommodate

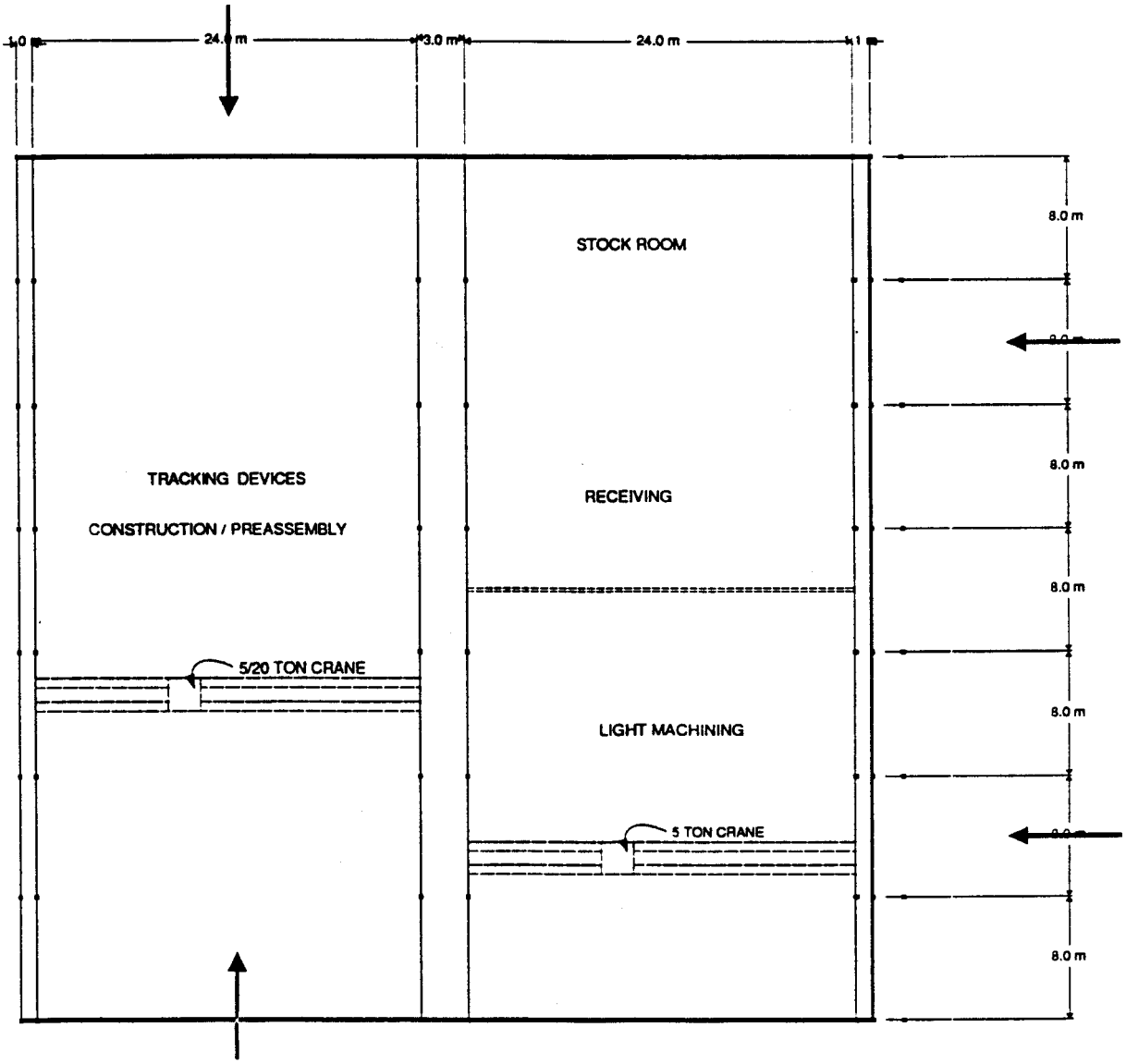


Figure 5-4. Shop building.

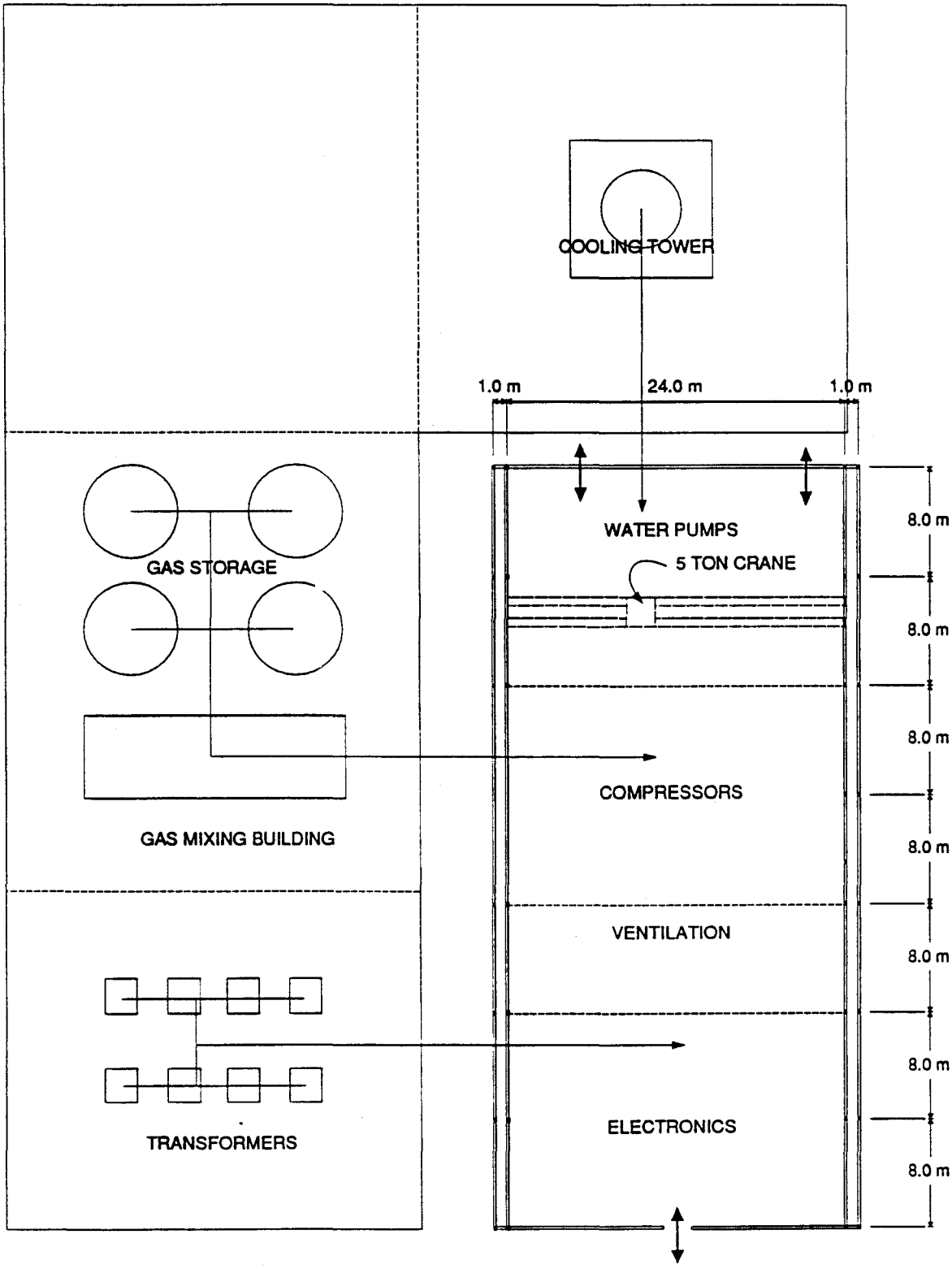


Figure 5-5. Utilities center and compressor building.

**Figure 5-6. Office building.**

detector construction requirements. Personnel access doors would be located at each large door location. The floor of the building would be a concrete slab designed to support local loads of up to 20 tons over a reasonable area. The design of the building uses concrete and steel beams with insulated panels and aluminum cladding on the exterior. Each building would have heating, ventilating, fire protection, and air conditioning systems as appropriate.

### 5.6.2 Shop Building

In the model, the shop building near the entrance of each site (Figure 5-4) fulfills three main functions: receiving, stock room, and light machining. Its dimensions are the standard 85 ft wide by 185 ft long by 45 ft high [$26 \times 56 \times 14$ m$^2$]. An overhead crane covers the machine shop floor area with one 5-ton hook at a height of 25 ft [8 m].

### 5.6.3 Utilities Center and Compressor Building

The utilities center (Figure 5-5) provides power, ventilation, water, compressed air, vacuum, and cryogenics to the experiment. The dimensions of the building would be 85 ft by 200 ft with a 26-ft height [$26 \times 64 \times 14$ m$^2$]. One of two main sections of the utilities center is the 3,000-m$^2$ outdoor utilities storage area with electrical transformers, cooling towers, gas tanks, and a gas-mixing building. The other main section, the compressor building, houses the helium compressors and has large air fans and air-treatment units for the ventilation system, compressed-air systems, chilled water systems, water pumps and electronic control and monitoring devices.

### 5.6.4 Operations Center

The operations center (Figure 5-6) would provide space for about 400 persons during operation of a typical experiment. These include physicists running the experiment and working in support functions and on data acquisition and analysis, engineers and technicians

working on detector maintenance, repairs, and upgrades, and administrative staff. The building is located next to an access shaft to provide convenient access to the underground facilities. An elevator services the three stories of the building.

### 5.6.5 Access and Control Buildings

Access to an experimental area is monitored from an entrance kiosk in communication with the main control room. This kiosk might be a small building of concrete, insulated panels, and aluminium cladding on the exterior, and provided with appropriate utilities.

Access buildings at the top of each shaft would contain cranes and/or elevators. Some shafts would be designed to provide only personnel access and so would have no cranes. Other shafts would be designed to provide only detector or service-components access and have neither elevators nor stairways. Truck access to these buildings would normally be provided at only one end of the building. One personnel access door would be located next to a truck access door, and another emergency exit would be located at the opposite end of the building.

The dimensions of the access buildings in the model are 85 ft by 100–180 ft [26 × 32–56 $m^2$], depending on specific access requirements, by 26 ft [14 m] high. An overhead crane might service most of the floor area with one or two hooks from 5-to-100-ton capacity at a 25-ft [8 m] height. The dimensions of the personnel access building are 25 by 50 ft [8 × 16 $m^2$] with a 20-ft [6 m] height.

## 5.7 Parking Lots, Roads, Landscaping

Parking lots would be provided appropriately at each site. Roads and parking lots are nominally paved. Roads are usually sized for two-way traffic (20 ft [6 m] wide) and curves have an internal radius of 65 ft [20 m] where large-vehicle access would be needed.

## Bibliography

1. U.S. Department of Energy. Draft Environmental Impact Statement, Superconducting Super Collider. DOE/EIS-0138D (1988) .
2. D. Shuman, Sector Service Areas. SSC-N-470, Berkeley (1988).
3. Rapport Provisoire de Sureté du LEP. CERN, Geneva (1987).
4. UA2 Handbook, edited by P. Darriulat. CERN, Geneva (1982).
5. G. Bachy, Design, Installation Problems and Criteria Related to Large Accelerators. Proceedings of the 1987 Accelerator Conference. Washington D.C. (1987).

# CHAPTER 6

# SITE-SPECIFIC MODEL OF FACILITIES AND EXPERIMENTS

## 6.1 Introduction

This chapter describes the model experimental facilities for the Texas site and the model construction schedules for each. We present descriptions and drawings of the underground facilities, surface facilities and detector models. (Drawings are contained in the appendix following Chapter 7.) For each of the four interaction regions we present the following information:

- Underground facilities description
- Surface facilities description and drawings
- Finished hall and detector drawings
- Underground construction drawings
- Detector components drawings
- Detector assembly sequence drawings

Model schedules for facility and detector construction, labeled by numbers corresponding to the IR site and the type of schedule, are grouped at the end of this chapter. Site nomenclature is that adopted by DOE for the Invitation for Site Proposals (ISP). The assumed lattice is that for the ISP.

- Schedule 1: Hall Construction
- Schedule 2: Surface Construction
- Schedule 3: Detector Development and Assembly
- Schedule 4: Summary Global Schedule for IR Development
- Schedule 5: Detector Critical Path Without Considering Building Availability
- Schedule 6: Detector Critical Path with Estimated Building Availability Dates

## 6.2 K-l Interaction Region: Large Solenoid Detector (LSD)

### 6.2.1 General Description

The model adopted for the structures for the Large Solenoid Detector follows the model used for L3 at LEP. In this model a single long collision hall is constructed with its major axis along the collider beam line. The hall is designed and sized to allow space for construction of the detector in situ. Such an approach would be indicated if the detector components were too large to move off line for servicing. The approach would be viable if an alternate beam orbit (bypass) were provided to allow for moving the beam line away from the detector, or if the schedule for completion of detector construction were matched to that of the accelerator and adequate down time were provided during the annual operating cycle to maintain and upgrade the detector in situ. No special shielding is required in this model, since there is no beam-level assembly area requiring access during operations.

Key features include:

- The beamline is 217 ft [66.1 m] below the surface.
- The interaction point is located approximately centrally in the collision hall, 30 ft [9.5 m] above the floor.
- A collision hall, 92 ft W × 260 ft L × 95 ft H [28 × 80 × 29 $m^3$] (no assembly hall) where the width is transverse to the beam.
- A 30 × 40-$ft^2$ [9 × 12 $m^2$] construction shaft from the surface to the hall roof.
- Two 15-ft– [5 m] diameter personnel and utility shafts with tunnels.
- A 30-ft– [9 m] diameter equipment shaft with tunnels.
- Two overhead cranes: one 100/100-ton crane and one 100/20-ton crane; hook height is 80 ft [25 m].

Dimensions for the collision hall are based on access around the assembled detector, clearance for the components retracted during maintenance for access to the core, crane operating hook height, and laydown space for assembly of detector components.

The basic features of the completed underground facilities of this model are shown in drawings Kl-01 and K1-02. The cut-and-cover construction features are shown in drawings K1-03, K1-04, and K1-05. The LSD components and underground assembly sequences are shown in drawings K1-06, K1-07, K1-08, and Kl-09.

### 6.2.2 Collision Hall

The dimensions of the collision hall are shown on drawing K1-02. This study does not include quantitative designs for the thickness of walls or floors of tunnels, shafts, or halls.

The overall length of the hall has been set at 260 ft [80 m], the estimated length required for installation, as indicated on drawings K1-06 and K1-07. Option KlC features a longer hall and is discussed later.

The interaction point is 140 ft [43 m] along the beam from one end of the hall. This leaves 26 ft [8 m] between the detector (defined by the low-β quadrupoles) and one end wall and 46 ft [14 m] clearance at the other end of the hall. Drawing K1-08 shows how these locations and dimensions relate to the required laydown and access areas during detector installation.

The centerline of the collision hall is offset by 3 ft [1 m] from the beamline. The inside width of the hall is 92 ft [28 m], which is determined by the clearances required to move the half-muon toroids and the end caps for access to the core components. When the toroids are retracted, there is approximately 3 ft [1 m] of clearance between the forward components and the two half-toroids; approximately 3 ft [1 m] of clearance between one sidewall and a toroid; and approximately 10 ft [3 m] clearance between the other sidewall and the other half-toroid. These dimensions allow passage of people and small equipment and include space for mounting electrical cables and equipment on the walls and detector components.

The hall crane hook height is 80 ft [25 m] above the floor. The crane hook is 25 ft [7 m] above the magnet yoke structure and the muon-tracking apparatus, leaving an 8-ft [2.5 m] clearance above the roof of a 14 ft [4.5 m] electronics house. The hall ceiling is 13 ft [4 m] above the hook, thus, the overall height of the hall is 95 ft [29 m].

### 6.2.3 Shafts and Tunnels

One rectangular construction shaft, two circular personnel shafts, one circular equipment shaft, three hall access tunnels, and a utilities bypass tunnel were modeled. They are shown in Drawing Kl-02, along with the ring tunnel. The dimensions and requirements of each are as follows:

#### Construction Shaft

The 40 × 30-ft [12 × 9 m] construction shaft is sized to allow the lowering of large preassembled pieces from the surface during construction. (An example is a half-coil weighing approximately 400 tons, 34 ft [10.5 m] in diameter by 26 ft [8 m] long.) After construction, the shaft would be plugged with shielding blocks for collider operation.

#### Personnel Shaft

The two 15-ft [5 m] internal-diameter personnel shafts are sized to include an elevator and stairwell, and one includes a vent duct. One shaft is on the side of the hall towards the ring center and extends up into the operations area of the surface facilities. Access tunnels to

the ring bypass tunnel and to the main tunnel into the hall are provided. The other personnel shaft is on the opposite side of the hall, close to its end. It includes no vent duct.

**Equipment Shaft**

The 30-ft– [9-m] internal-diameter equipment shaft includes a stairwell and vent duct. It is sized to allow a 16 × 16-ft [5 × 5 $m^2$] preassembled component to be lowered into the hall. This shaft is 125 ft [37 m] from the side of the hall away from the ring center, at the opposite end from the construction shaft. The equipment shaft extends to the surface and terminates at one end of the external detector building. A dual 100/100-ton bridge crane in the detector building provides the lifting capacity for this shaft.

**Bypass Tunnel**

The bypass tunnel would have a width to match the main beam tunnel. The straight section of the tunnel is 45 ft [13 m] from the wall of the collision hall; this distance provides sufficient clearance from the collision hall to allow independent construction of the hall and its utility bypass. The bypass tunnel curvature is set at 400 ft [40 m] to allow passage of a loaded magnet transporter.

### 6.2.4 Cranes

In the model, two top-running bridge cranes are provided in the collision hall. Both cranes have a hook height of 80 ft [25 m] and a span of approximately 90 ft [27 m], and run on a common set of rails.

The crane at the construction shaft end of the hall is a 100/100-ton crane, i.e., it will have two 100-ton hooks, each on a separate trolley. This crane is used for handling the large quantities of steel required for the magnet yoke assembly, most of which would be lowered down the construction shaft by a 200-ton gantry crane on the surface. The second crane is a 100/20-ton crane with both hooks on the same trolley, to be used primarily for component assembly work.

### 6.2.5 Transfer Carts

Transfer carts supported by multirollers are used to transfer equipment from the bottom of the equipment shaft into the collision hall. This approach needs to be re-evaluated to consider the impact of this operation on construction schedules. Moving shafts closer to the hall (or into the hall) would simplify operations, but would delay availability of the shaft itself in the cut-and-cover model. In the collision hall, the overhead crane is used to position components for assembly. Special rigging techniques would be used for massive components, such as half of a coil or a large calorimeter, that would exceed the capability of the cranes. Components designed to be movable, such as half-toroids and end caps, would be assembled on permanent carriers and rolled into position.

### 6.2.6 Construction Features

The construction approach for K1 (base design) is shown on drawings K1-03, K1-04, and K1-05. The basic technique is open-cut excavation down to the collision hall roof using a straight, inclined ramp.

There are nominally six benches 25 ft [8 m] high between the surface and the collision hall roof. The benches have vertical walls and 6-ft– [2 m] wide berms. There is an additional 7 ft [2.2 m] of topsoil with sloped excavation at the surface. At the base of the excavation (roof of the hall), is a 40-ft– [12 m] wide berm on all four sides.

The excavation for the hall itself will be a single, vertical bench down to the hall floor. The 40-ft– [12 m] wide, straight, inclined ramp extends 1590 ft [486 m] from the hall roof berm to the surface at a 10 percent grade.

Shafts are located so that there is a minimum of 15 ft [5 m] clearance between the edge of the excavation and the inside edge of a shaft.

### 6.2.7 Superstructure

Drawing K1-05 shows a conceptual arrangement of the completed hall (without detector) that includes three floors of a superstructure that may be built below the surface in part of the excavation space above the collision hall. This structure's use has yet to be defined, but it would replace some of the surface facilities, i.e., office space, shops, storage, electronic maintenance, control rooms for detector operation, etc.

The three floors are each 25 ft [8 m] high and there is a 40-ft [12 m] backfill between the lower floor and the hall roof for shielding. The $30 \times 40\text{-ft}^2$ [$9 \times 12\ \text{m}^2$] construction shaft penetrates from the surface through each of the floors and the backfill to the collision hall roof. The overall dimensions of the superstructure are 145 ft W by 300 ft L by 80 ft H [$44 \times 94 \times 24\ \text{m}^3$]. The roof of the structure is about 28 ft [8.7 m] below the surface.

This superstructure is only included in the drawings and schedule for Kl, but might be considered for any or all of the collision hall sites.

### 6.2.8 K-1 Surface Site Facilities

In the Texas proposal K1 is in the west cluster near the injector complex, in a cultivated field 2.8 miles north of the town of Boz. The site is 0.4 miles northwest of State Route 66 and 2 miles east of the Oak branch of Chambers Creek.

The parameters for K1 are summarized in Table 6-1. A model of the surface flow of activities and an organization diagram are shown in figures 6-1 and 6-2. Figure 6-3 shows plan and section views of the experiment.

Table 6-1
K1 Surface Facilities Parameters

| Buildings | | | Functional Divisions in Buildings | | Utilities | | | |
|---|---|---|---|---|---|---|---|---|
| | Area ($m^2$) | l × w × h (m) | Function | Area ($m^2$) | Crane (t) | Hook Height (m) | Ele-vators | HVAC* |
| K11 | 64 | 08×08×04 | Site control | 64 | | | | HVAC |
| K12 | 1,600 | 62×26×14 | | | 5 | 8 | | V |
| | | | Cooling | 300 | | | | |
| | | | Electrical | 300 | | | | |
| | | | Ventilation | 500 | | | | |
| | | | Cryogenics | 500 | | | | |
| K13 | 1,456 | 26×56×14 | Office | 1,456 | | | 2 | HVAC |
| K14 | 4,480 | 56×80×14 | Conv. Coils | 1,344 | 20/5 | 8 | | HVAC |
| | | | Iron | 1,344 | 100/20 | 8 | | HVAC |
| | | | Large C. Welding | 1,344 | 100/20 | 8 | | |
| K15 | 3,286 | 62×53×18 | Large C. Winding | 1,600 | 100/20 | 12 | | |
| | | | Testing | 1,600 | 100/20 | 12 | | |
| K16 | 2,968 | 56×53×14 | Muon | 1,344 | 20/5 | 8 | | HVAC |
| | | | Calorimeter | 1,344 | 30/5 | 8 | | HVAC |
| K17 | 2,968 | 56×53×14 | Shop | 1,344 | 5 | 8 | | HVAC |
| | | | Tracking | 1,344 | 5 | 8 | | HVAC |
| K18 | 1,040 | 40×26×14 | Access | 1,040 | 100 | 8 | | V |
| K19 | 208 | 26×08×08 | Access | 1,040 | | 8 | | V |
| K111 | 1,040 | 40×26×14 | Access | 1,040 | 30/5 | 8 | | V |
| Total | 19,110 | | | | | | | |
| Exterior Areas | | | | | | | | |
| K1E1 | 4,770 | | Parking 1 | | | | | |
| K1E2 | 1,976 | | Parking 2 | | | | | |
| K1E3 | 1,512 | | Shop Storage | | | | | |
| K1E4 | 1,960 | | Assembly Storage | | | | | |
| K1E5 | 6,987 | | Assembly Storage | | | | | |
| K1E6 | 3,426 | | Utilility Storage | | | | | |
| K1E7 | 34,386 | | Paved Area | | | | | |
| K1E8 | 43,126 | | Extensions, Landscaping | | | | | |
| Site Total | 118,320 | | | | | | | |

*Heating, Ventilating, and Air Conditioning Systems

The LSD experiment modeled at K1 is the largest considered for the SSC; the detector weight would be 37,000 tons (1) and it would be preassembled into modules at the surface. In the model the following buildings with their functions are provided:

- K14: Conventional coils, iron modules, welding of the large coil modules
- K15: Winding and testing of the large coil modules
- K16: Muon chambers and calorimeter
- K17: Tracking devices (K17 houses also shop facilities)

Access buildings provided at the top of each shaft with their functions are:

- K18: Iron modules, and large coil halves $30 \times 40$ ft$^2$ [$8 \times 9$ m$^2$]
- K19: Personnel, and cables from the detector to the operations building.
- K111: All other detector components.

Other buildings provided are:

- K11: Site access monitoring
- K12: Utilities
- K13: Operations building
- K17: Shop

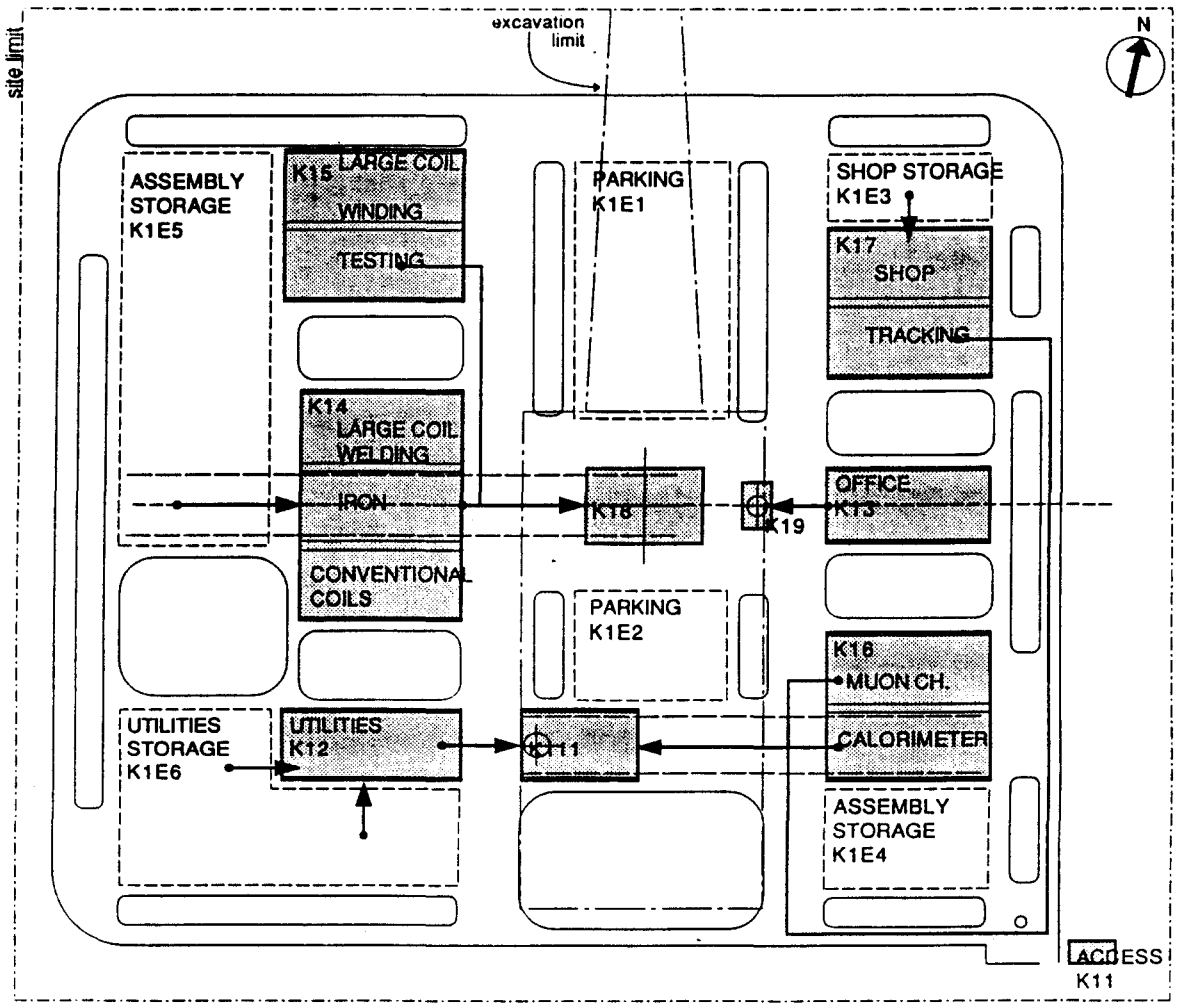


**Figure 6-1. K1 surface activities flow.**

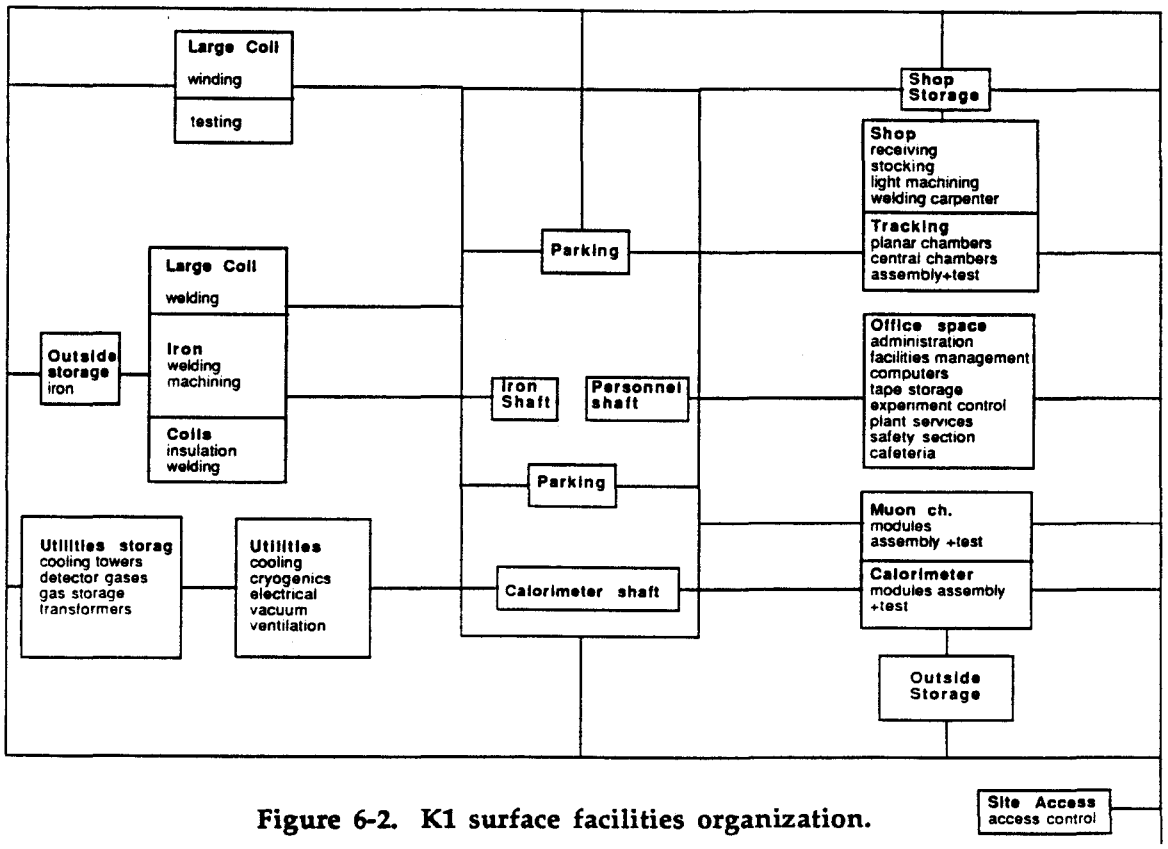


Figure 6-2. K1 surface facilities organization.

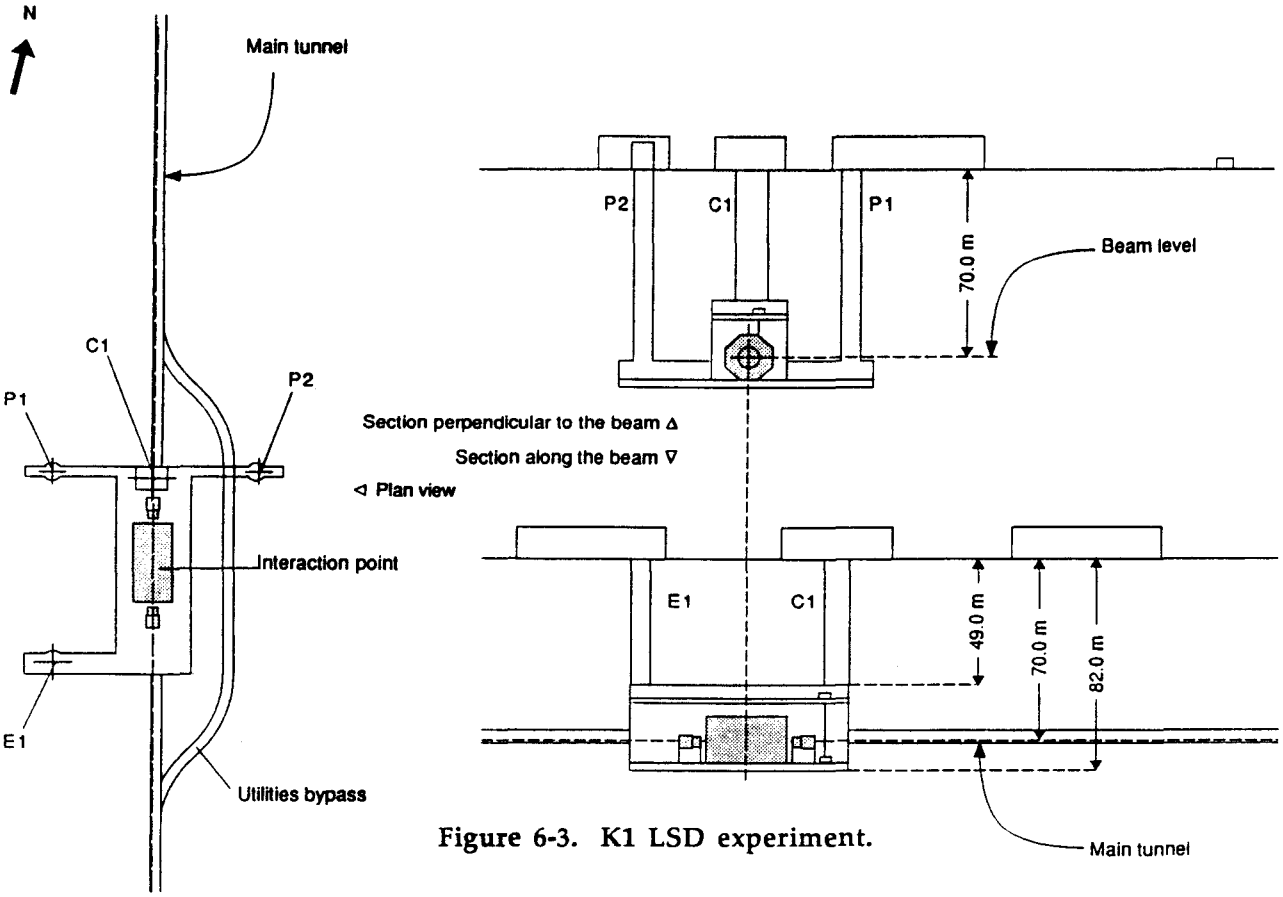


Figure 6-3. K1 LSD experiment.

All buildings have a maximum height of 45 ft [14 m] except building K 15 (60 ft [18 m]) and have the same orientation relative to the main ring. Helium compressors are located in the utilities building which is accoustically treated to contain the high sound level from the compressors. A refrigerator supplies helium to two 5,000-liter storage dewars located on top of the flux return yoke of the detector (2, 3).

### 6.2.9 Detector Assembly Sequence

The size of the collision hall for the detector is determined by maintenance and assembly requirements and not by the operating dimensions of the detector. The width of the hall is determined by the space required to move the intermediate half-toroids sideways to allow retraction of the end cap. To estimate assembly area dimensions, the four assembly steps shown in drawings K1-08 and Kl-09 were devised. Each of these four steps represents a substantial time period. This assembly sequence illustrates the additional space needed in the collision hall in the assembly process.

Only the underground activities are described here. Parallel activities will take place at the surface facilities and off-site.

**Step 1**

A. Assembly of the steel for the magnet yoke begins, requiring 10,000–13,000 tons of steel modules; this activity continues throughout the detector assembly period. The magnet yoke is assembled in place on the beamline and will not be moved.

B. Assembly of the calorimeter begins. A temporary enclosure is constructed because of the clean room requirements for this component. The calorimeter is made up of hundreds of pieces which are preassembled at the surface. The total weight of the calorimeter exceeds 5,000 tons, and assembly takes several months. The calorimeter is assembled into its cryostat on a special transfer carriage and translated along the beam for installation into the detector assembly when completed.

**Step 2**

A. All heavy steel construction begins on the collision hall floor. This includes four half-muon toroids and two end cap assemblies. As shown on Drawing K1-08, these components are constructed in convenient locations with available space, since they are designed to be movable items. Each half-muon toroid weighs approximately 2,000 tons and each end cap approximately 4,000 tons. Again, these are long-duration activities. Associated calorimetry and tracking components for these assemblies are not installed at this stage because of the "dirty" nature of the steel erection.

B. The two coil halves are preassembled in the surface building above the collision hall. When lowered into the hall by the temporary construction crane from the surface, the coil is handled by specially designed transfer carriages to allow installation into the yoke.

Transfer into the yoke assembly takes place when the yoke is sufficiently complete to support the coil, but still has an open top to allow the cryogenics to be connected as a preassembled package to the coil. The timing of this latter step is driven by completion of the coil.

**Step 3**

The steel construction of steps 1 and 2 continues. The calorimeter assembly is completed, the temporary enclosure is removed, and the calorimeter is installed inside the coil using specially designed transfer supports.

**Step 4**

A. In this step, iron construction is completed. The calorimeter and tracking components that were preassembled at the surface are lowered to the collision hall and installed on their respective components: muon toroids, end caps, and magnet yoke.

B. The end caps and muon toroids are rolled into position on the detector. Assembly of the forward components takes place as preassembled pieces are lowered into the hall from the surface.

C. Final installation of electronics, utilities, and services takes place, and checking and testing of the completed detector begins.

### 6.2.10 Options for K-1 Hall

**K1 Option A: Cut-and-Cover Construction with Cutout**

The basic features of cut-and-cover with cutout are shown on drawings K1A-01 and K1A-02. In the cut-and-cover with cutout option of the basic hall plan, the 30-ft– [9 m] diameter equipment shaft has been replaced with a rectangular recess 30 ft wide by 140 ft deep [$9 \times 42$ m$^2$] reaching down to the base of the hall. The recess is excavated along with the main pit and, therefore, is always at the same level as the main excavation. The recess is then used as an alternate means of transporting muck out of the excavation area. After construction is complete, the recess functions as the equipment shaft; a gantry crane is used to transport large detector components to the collision hall. All other dimensions and features of the basic collision hall remain unchanged.

**K1 Option B: Cut-and-Cover Construction with Spiral Ramp**

The basic construction features of this option are shown on drawings K1B-01 and K1B-02. The spiral ramp version of the basic K1 hall differs in its method of excavation only. A spiral ramp replaces the straight ramp of the basic model. Advantages are the reduction of excavation spoils and a smaller overall excavation area; however, excavation of a larger area of land in the neighborhood of the collision hall is required. If the ramp is to

remain operational after excavation, a further advantage is that it surfaces much closer to the hall than the straight ramp.

**K1 Option C: Extended Hall**

**Finished Hall Features.** The basic features of the completed hall are shown on drawings KlC-01 and KlC-02. The overall length of the hall is increased by 140 ft to 400 ft [42 m to 122 m], providing additional laydown area, in particular for a larger clean room (calorimeter assembly area). Also, the clearance between the hall and the detector at one end of the collision hall would be increased from 45 ft to 180 ft [14 m to 56 m]. All other features and dimensions of the base case remain unchanged.

**Cryogenic Facilities / Liquid Argon Storage.** This option includes a cryogenics chamber and liquid argon sump, shown on drawings K1C-01 and K1C-02. The cryogenics hall/liquid argon sump has an overall length of 164 ft [50 m] and is 40 ft [12 m] wide. The liquid argon sump is at the base of this chamber and is 15 ft [5 m] deep. A 3-ft– [1-m] diameter gas duct leads from the base of the calorimeter to the sump. There is also a 3-ft– [1 m] diameter vent duct from the sump to the surface. The remainder of the chamber provides room for four cryogenic storage cylinders, each 15 ft [4.5 m] in diameter and 32 ft [10 m] tall. There is a 15-ft [5 m] clearance to the apex of an arched ceiling above these cylinders, comprising an overall hall height of 65 ft [20 m].

**Construction Features.** The construction features of the extended hall are shown on drawings KlC-03 and KlC-04. The excavation area is 140 ft [42 m] longer than in the base case to accommodate the longer hall. The cryogenic facilities/liquid argon storage are excavated by road header or drill and blast techniques.

**Assembly Sequence.** As with the original case, assembly of the LSD is divided into four steps. Steps 1 and 2 are shown on Drawing KlC-05, steps 3 and 4 on Drawing KlC-06.

Most of the additional space provided by the increased length of the hall is taken up by an enlarged clean room for assembly of the calorimeter. The only other difference from the original assembly sequence is the assembly position of one of the end caps (see drawings KlC-05 and KlC-06).

**K1 Option D: Elevated Roof**

**Finished Hall.** The basic features of the elevated roof structure are shown on drawings KlD-01 and KlD-02. The hall roof is elevated by an additional 30 ft [9 m] and the width of the excavation bench is extended by 40 ft [12 m]. This provides greater crane clearance above the detector and additional storage/assembly area. If the construction ramp is retained for operation, the longer bench area provides an off-loading point for delivery and utility vehicles. As shown, the crane is raised 23 ft [7 m] for a hook height of 105 ft [32 m] above the floor, and the crane span increases to about 115 ft [35 m].

**Construction Features.** The construction features are shown on drawings KlD-03 and KlD-04. Additional excavation for the extended bench is required; all other features remain unchanged from the basic plan.

### 6.2.11 K1 Model Schedules

Model schedules K1-1 through K1-6 present information on the development of interaction region K1. K1-1, K1-2, and K1-3 are the underground hall, surface, and detector components of the integrated K1 schedule. K1-4 is a one-page summary of the integrated schedule. Schedule K1-4 shows that, according to this model, conventional construction at K1 may run for about two-and-a-half years, while detector development may extend eight-and-a-quarter years.

Model schedules K1-5 and K1-6 illustrate the length of time conventional construction may add to detector development. Schedule K1-5 presents the critical path for the LSD without accounting for building availability; Schedule K1-6 shows the LSD critical path with buildings ready at the estimated dates. Schedule K1-5 shows the path running through the LAC module tasks and the estimated duration to be about seven years. In the schedule taking account of building availability, K1-6, the critical path is through the fabrication of the superconducting coils and succeeding tasks. This schedule indicates that building availability considerations add about fifteen months to the detector completion date.

## 6.3 Interaction Region K2: Nonmagnetic Detector (NMD)

### 6.3.1 General Description

The model adopted for the structures required for the NMD follows one of the options developed for the proposed Large Hadron Collider (LHC) at CERN. In this model, the detector is constructed in a hall equivalent in size to the collision hall. When the assembly is completed, the detector is moved into the collision hall. For the LEP case this allows the LEP program to continue while the detector is being constructed. When the detector is complete, the LEP operation is shut down, construction of the collision hall is accomplished, and the detector is transferred into the collision hall. This model would be especially appropriate for the future experimental areas in the ISP layout.

The completed underground facilities for this model are shown on drawings K2-01 and K2-02. The key features of this hall are:

- The beamline is 216 ft [65.8 m] below the surface.
- The interaction point is located in the center of the collision hall, 38 ft [11.5 m] above the hall floor.
- A collision hall, 80 ft W × 220 ft L × 85 ft H [24 × 67 × 26 $m^3$]. An assembly hall, 80 ft W × 190 ft L × 85 ft H [24 × 57 × 26 $m^3$].
- Two 30-ft by 60-ft– [10 × 19 $m^2$] long equipment transfer tunnels with provision for two 23-ft– [7-m] thick shielding blocks and storage pockets.
- A 30 × 40-$ft^2$ [9 × 12-$m^2$] construction shaft leading from the surface to the collision hall.
- A 30-ft– [9-m] diameter equipment shaft and tunnel leading to the assembly hall.
- A 15-ft– [5 m] diameter personnel shaft and tunnel leading to the assembly hall.
- Two overhead cranes in the collision hall: one 100/100-ton crane and one 100/20-ton crane.
- Two overhead 50/20-ton cranes in the assembly hall.
- A tunnel leading from the assembly hall to the utility bypass tunnel.

The cut-and-cover construction features are shown on drawings K2-03 and K2-04. The NMD components and underground assembly sequence are shown on drawings K2-05, K2-06, K2-07, and K2-08.

### 6.3.2 Collision Hall

The dimensions of the collision hall are shown on Drawing K2-02, exclusive of the thickness of walls and floors of tunnels, shafts, or halls.

The hall length is 220 ft [67 m], which provides ample room for the detector assembly (see drawings K2-07 and K2-08). The offset located at one end of the hall provides temporary storage for the end muon toroid and leaves a clear passage to the equipment transfer tunnel.

The interaction point is located in the center of the hall, 110 ft [33 m] from either end. This leaves a 70-ft [21 m] clearance between the end of the detector and the corresponding end wall. The inside width of the hall is 80 ft [24 m], providing a 15-ft [4.4 m] clearance between the central scintillators and drift chambers and the hall sidewalls. These dimensions allow room for personnel and equipment travel, and space for mounting electrical cables and HVAC equipment.

The two cranes in the collision hall have hook heights of 70 ft [22 m] above the floor. This provides a 10-ft [2.9 m] clearance above the central scintillators and drift chambers. The hall ceiling is 15 ft [4 m] above the hook, therefore, the overall height of the hall is 85 ft [26 m].

### 6.3.3 Assembly Hall

The dimensions of the assembly hall are shown on Drawing K2-02. The overall length of the hall is 190 ft [57 m] to provide adequate room for both the clean room, end cap, and central catchers during step 3 of the detector assembly sequence.

The assembly hall is 80 ft [24 m] wide to provide adequate access to the equipment shaft from either end of the hall without interfering with the detector assembly work.

The two cranes in the assembly hall have hook heights of 70 ft [22 m]. The hall ceiling is 15 ft [4 m] above the hook, making the overall height of the hall 85 ft [26 m].

### 6.3.4 Shafts and Tunnels

The underground facilities have one rectangular construction shaft, a circular equipment shaft, a circular personnel shaft, the hall access tunnels, and the utility bypass tunnel (see drawing K2-02).

The $30 \times 40\text{-ft}^2$ [$9 \times 12\ \text{m}^2$] construction shaft is primarily sited for the central muon toroid and end muon toroid components. During operation of the detector, the shaft is plugged with shielding blocks.

The 30-ft– [9 m] diameter equipment shaft includes a stairwell and vent duct. This shaft allows a $16 \times 16\text{-ft}^2$ [$5 \times 5\ \text{m}^2$] preassembled component to be lowered into the assembly

hall. The shaft is located approximately 129 ft [39.4 m] from the north end of the assembly hall, which provides a 20-ft [5.5 m] buffer zone from the construction excavation.

The personnel shaft has an inside diameter of 15 ft [5 m] and is sized to include an elevator, a stairwell, and a vent duct. The shaft is approximately 155 ft [47.4 m] from the south end of the assembly hall, providing a buffer zone of 20 ft [5.5 m] from the construction excavation.

The utility bypass tunnel matches the dimensions of the collider ring tunnel. The straight section of the tunnel is 30 ft [9.2 m] from the wall of the assembly hall. The bypass tunnel's bending radius is set at 130 ft [40 m] to allow passage of a loaded dipole magnet transporter. Access to the bypass tunnel is provided from the assembly hall.

### 6.3.5 Equipment Transfer Tunnels and Shielding

The assembly and collision halls are connected through two equipment transfer tunnels. The dimensions of these tunnels are shown on Drawing K2-02. The tunnels are 30 ft wide by 60 ft long by approximately 45 ft high [$10 \times 19 \times 14$ m$^3$]. The tunnels are positioned to provide a minimum of interference with the detector construction, yet allow unobstructed mobility of personnel and equipment between the two halls.

Each equipment transfer tunnel has a shielding door with a recess for storage. The blocks are 23-ft [7 m] thick and large enough to completely close off the equipment transfer tunnels during operation of the accelerator. A 3-ft– [1 m] wide labyrinth at each equipment transfer tunnel allows passage between the halls with the shielding door in place.

Shielding between the halls is provided by the unexcavated rock separating them. The halls are 60 ft [19 m] apart; this separation provides adequate shielding and preserves the structural integrity of the rock adjacent to hall construction.

### 6.3.6 Cranes

The collision hall is equipped with one 100/100-ton and one 100/20-ton top-running bridge crane. Both cranes have a span of approximately 75 ft [23 m] and run on a common set of rails. The 100/100-ton crane has two separate 100-ton hooks and is primarily intended to handle the large quantities of steel comprising the central muon toroids and end muon toroids. This steel is lowered down the construction shaft by a 200-ton gantry crane located at the surface. The 100/20-ton crane has both hooks on the same trolley and will be used for component assembly.

The assembly hall has two 50/20-ton, top-running bridge cranes, running on a common set of rails. These cranes will have both hooks on the same trolley and will be used for component assembly.

### 6.3.7 Construction Features

The main construction features are shown on drawings K2-03 and K2-04. The dimensions of the basic cut-and-cover excavation are shown on drawing K2-03.

There are nominally six benches 25 ft– [8 m] high between the surface and the collision hall roof. The benches have vertical walls and 7-ft– [2 m] wide berms. There is an additional 7-ft– [2.2 m] deep topsoil excavation at the surface. At the base of the excavation (roof of the hall) is a 40-ft– [12 m] wide berm on all four sides of the hall.

Excavation of the halls consists of two vertical benches down to the hall floors. An unexcavated 56-ft– [17 m] thick rock pillar separates the two hall excavations. The equipment tunnels are bored through this rock. The 40-ft– [12 m] wide, straight, inclined ramp extends approximately 1750 ft [533 m] from the hall roof berm to the surface at a 10 percent grade.

Shafts are located so that there is a minimum of 18 ft [5.5 m] clearance between the edge of the excavation and the inside edge of a shaft.

### 6.3.8 K-2 Surface Site Facilities

In the Texas proposal K2 is in the west cluster, next to experimental area K1, in a cultivated field 4.2 miles north of the town of Boz. The site is 0.4 miles northwest of State Route 1466 and 1.9 miles west of South Prong Creek.

The parameters for K2 are summarized in Table 6-2. The site's surface activities flow and an organizational diagram are shown in figures 6-4 and 6-5 and Figure 6-6 shows plan and section views of the experiment.

The proposed NMD experiment weighs 14,000 tons and would be partly preassembled into modules at the surface. The following buildings are provided in the model for the activities indicated:

- K 24: Iron and catcher modules.
- K 25: Muon chambers, calorimeter and conventional coils
- K 26: Tracking devices. (K26 also houses the shop facilities.)

Other conventional buildings are:

- K 21: Site monitoring
- K 22: Utilities
- K 23: Office building
- K 26: Shop

Buildings are located at the top of both shafts to provide access for equipment and personnel as indicated below:

- K 27: Iron and catcher modules, personnel and cables from the detector to the office building.
- K 28: All other detector components but the ones mentioned at K27, personnel, utilities access.

All buildings have a height of 45 ft [14 m] and are oriented parallel to the main ring.

Table 6-2
K2 Surface Facilities Parameters

| Buildings | | | Functional Divisions in Buildings | | Utilities | | | |
|---|---|---|---|---|---|---|---|---|
| | Area ($m^2$) | l × w × h (m) | Function | Area ($m^2$) | Crane (t) | Hook Height (m) | Ele-vators | HVAC* |
| K21 | 64 | 08×08×04 | Site Control | 64 | | | | HVAC |
| K22 | 1,456 | 56×26×12 | | | 5 | 8 | | HV |
| | | | Cooling | 300 | | | | |
| | | | Electrical | 300 | | | | |
| | | | Ventilation | 400 | | | | |
| | | | Cryogenics | 400 | | | | |
| K23 | 1,456 | 26×56×12 | Office | 1,344 | | | 2 | HVAC |
| K24 | 2,968 | 56×53×12 | Catcher | 1,344 | 30/5 | 8 | | HVAC |
| | | | Iron | 1,344 | 100/20 | 8 | | HVAC |
| K25 | 2,968 | 56×53×12 | Calorimeter | 1,344 | 30/5 | | | |
| | | | Coils + Muon | 1,344 | 5 | 8 | | HVAC |
| K26 | 2,968 | 56×53×12 | Tracking | 1,344 | 5 | 8 | | HVAC |
| | | | Shop | 1,344 | 5 | 8 | | HVAC |
| K27 | 1,040 | 26×40×12 | Access | 1,040 | | | 1 | |
| K28 | 1,040 | 26×40×12 | Access | 1,040 | | | 1 | |
| Total | 13,960 | | | | | | | |
| Exterior Areas | | | | | | | | |
| K2E1 | 4,212 | | Parking | | | | | |
| K2E2 | 1,400 | | Shop Storage | | | | | |
| K2E3 | 2,524 | | Assembly Storage | | | | | |
| K2E4 | 3,342 | | Utilility Storage | | | | | |
| K2E5 | 22,905 | | Paved Area | | | | | |
| K2E6 | 35,279 | | Extensions, Landscaping | | | | | |
| Site Total | 84,662 | | | | | | | |

*Heating, Ventilating, and Air Conditioning Systems

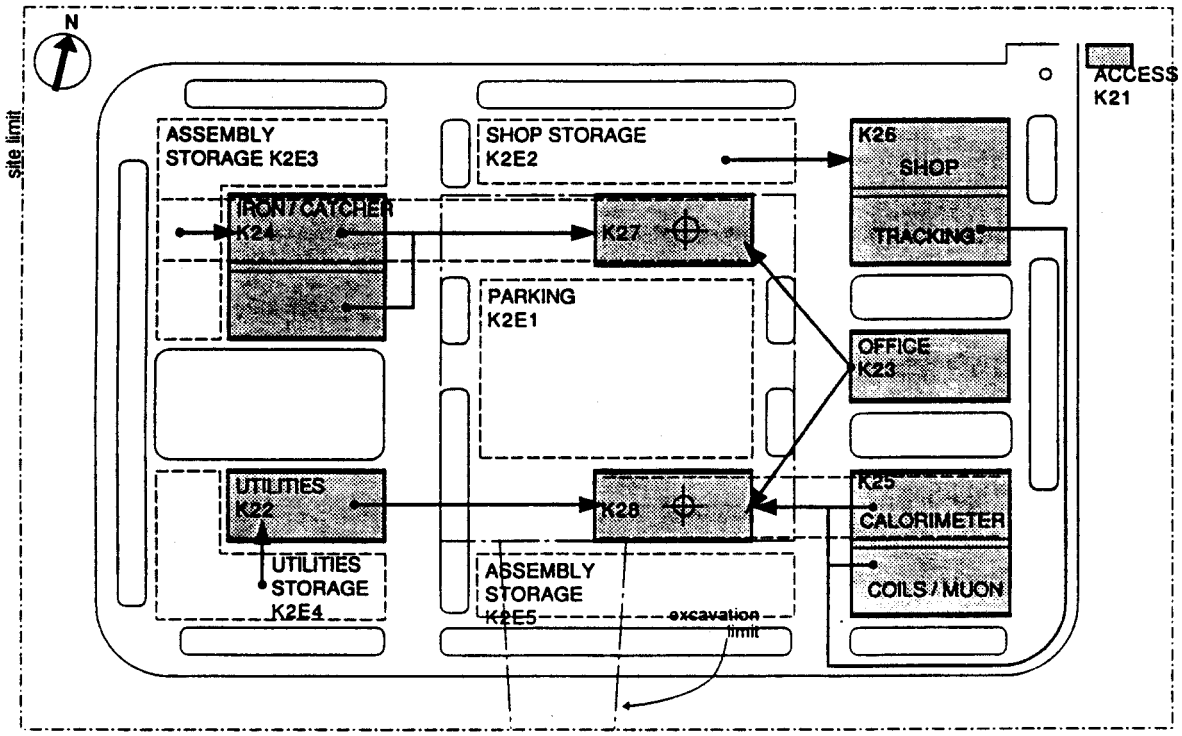


**Figure 6-4. K2 surface activities flow.**

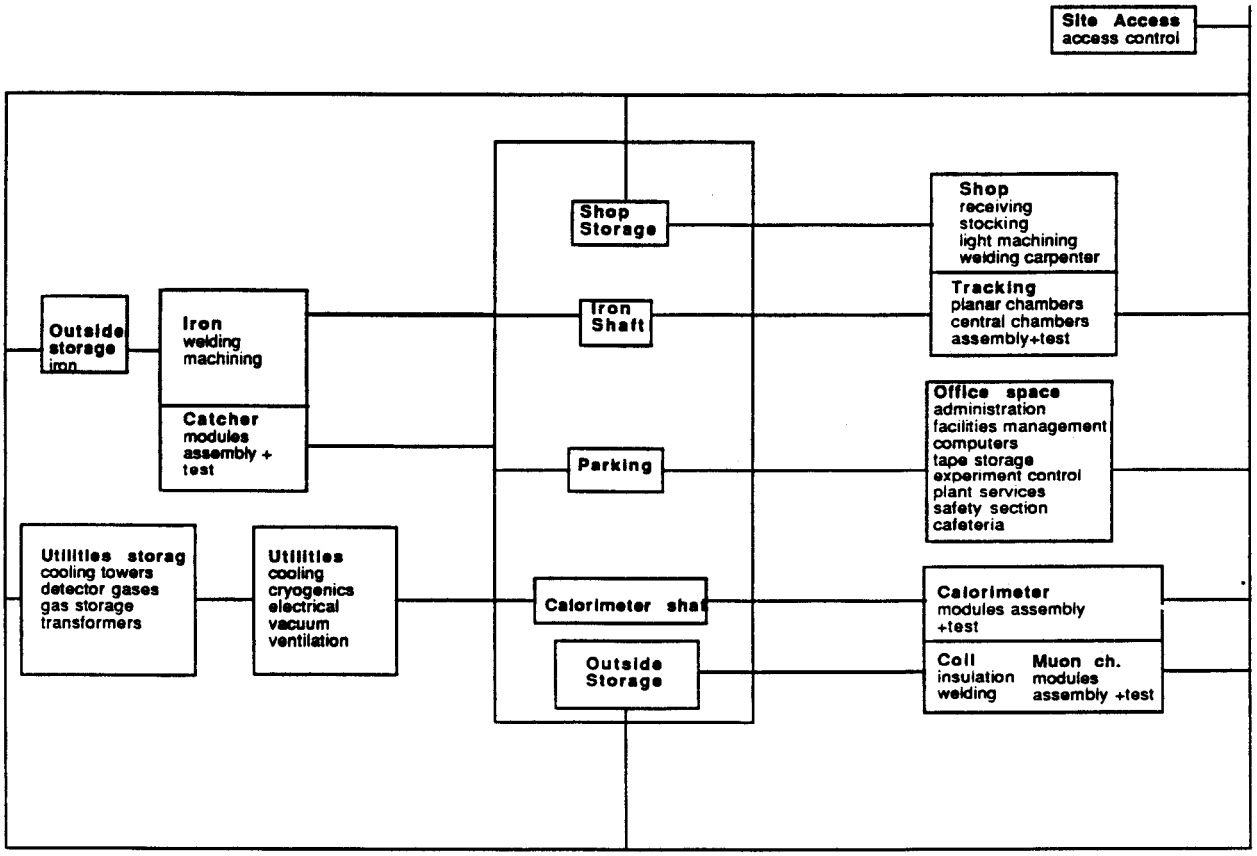


**Figure 6-5. K2 surface facilities organization.**

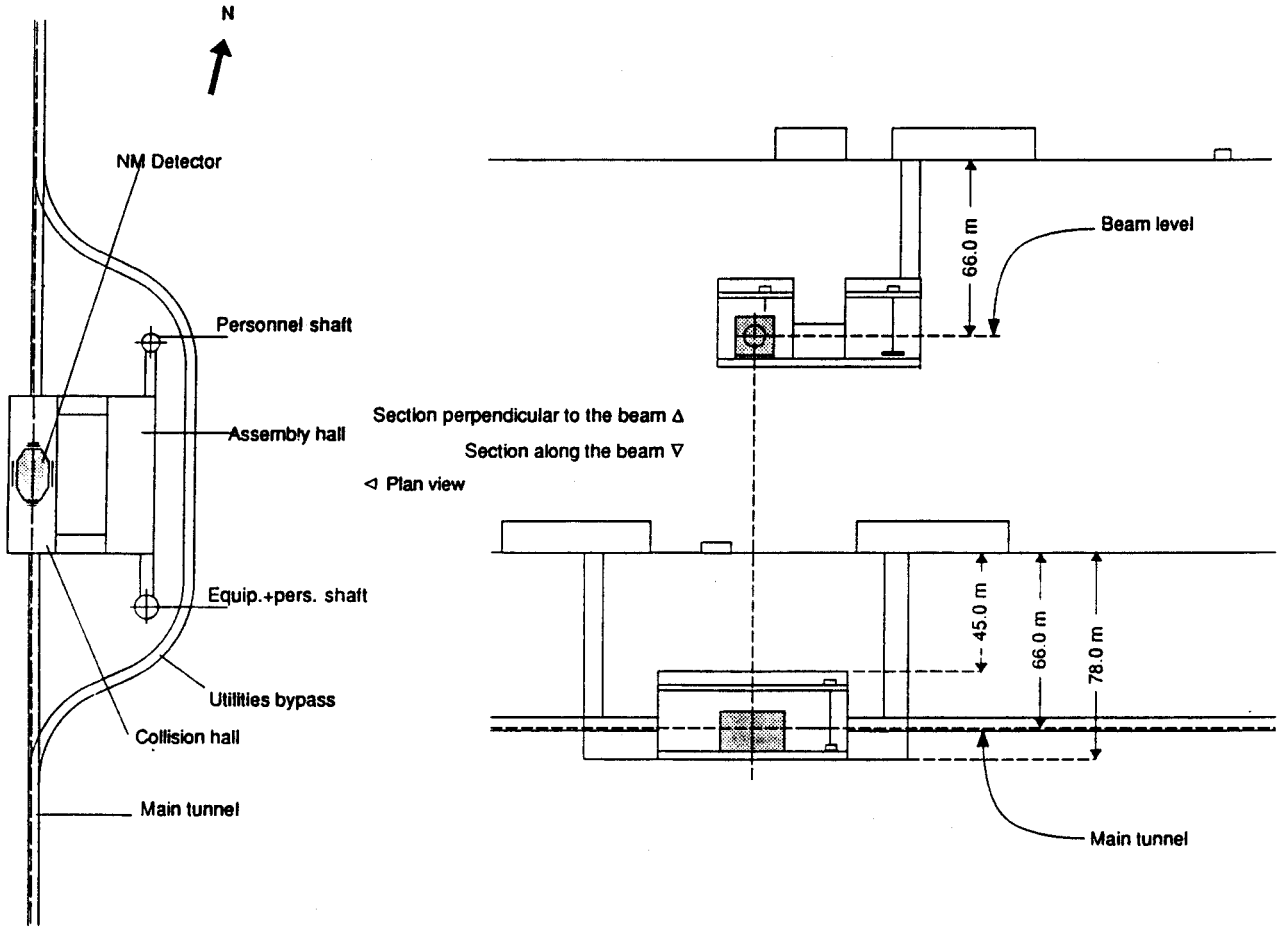


**Figure 6-6. K2 NMD experiment.**

### 6.3.9 Assembly Sequence

The assembly of the NMD is divided into four steps. Assembly steps 1 and 2 are shown on Drawing K2-07. Assembly steps 3 and 4 are shown on Drawing K2-08 along with sections through the assembly and collision halls. Drawing K2-05 shows the individual detector components with nomenclature and approximate weights.

The calorimeter and catchers are assembled in the assembly hall. The central and end muon toroids are assembled in the collision hall because of their relatively large size and weight — approximately 10,500 tons in total.

#### Step 1

The central muon toroid is assembled in its operating position using components brought in with a gantry-type crane primarily through the construction shaft opening directly into the collision hall.

**Step 2**

The muon end toroids are assembled in the collision hall. Once again, the components are lowered down the construction shaft directly into the collision hall. The end muon toroids are assembled in a position which assures sufficient clearance for passage of other equipment into the collision hall through the transfer tunnels. In parallel with the muon toroid, the central catcher and two end catchers are assembled in the assembly hall. The catcher is split into three separate units to facilitate its transfer to the collision hall during step 4.

**Step 3**

During this step, muon chambers are lowered into the collision hall and installed in the central and end muon toroids. In the assembly hall, the catcher chambers are installed in the central and end cap catchers, and the calorimeter is assembled. Assembly of the calorimeter requires a clean environment and, therefore, takes place inside a temporary enclosure.

**Step 4**

During step 4, the central and end cap catchers are moved individually to the collision hall through the nearest transfer tunnel. The completed calorimeter assembly is moved to the collision hall through the other transfer tunnel, the temporary enclosure having been dismantled. The calorimeter is then inserted into the catcher and the whole assembly is installed in the muon toroids. The detector is then closed, and assembly is complete.

### 6.3.10 K2 Model Schedules

Model schedules K2-1 through K2-6 present information on the development of interaction region K2. K2-1, K2-2, and K2-3 are the underground hall, surface, and detector components of the integrated K2 schedule. K2-4 is a one-page summary of the integrated schedule. Schedule K2-4 shows that, according to this model, conventional construction at K2 may run for about two-and-three-quarter years, while detector development may extend almost eight years.

Model schedules K2-5 and K2-6 illustrate the length of time conventional construction may add to detector development. Schedule K2-5 presents the critical path for the NMD without accounting for building availability; Schedule K2-6 shows the NMD critical path with buildings ready at the estimated dates. Schedule K2-5 shows the path running through the calorimeter module tasks and the estimated duration to be about six-and-a-half years. In the schedule taking account of building availability, K2-6, the critical path is through the central and end toroid assembly and succeeding tasks. This schedule indicates that building availability considerations add about one-and-a-quarter years to the detector completion date.

## 6.4 Interaction Region K5: Bottom Collider Detector (BCD)

### 6.4.1 General Description

The model adopted for the structures required for the Bottom Collider Detector is similar to the Nonmagnetic Detector model. It follows one of the options developed for the proposed Large Hadron Collider (LHC) at CERN. In this model, unlike the model used for the Large Solenoid Detector, no detector construction takes place in the collision hall. The detector is preassembled in an assembly hall equivalent in size to the collision hall which is shielded from radiation from the circulating proton beam. When the assembly is completed, the detector is then moved into the collision hall. For the LEP case this allows the construction of the assembly hall and assembly of the complete detector while the LEP program continues to operate. When the detector is complete, the LEP operation is shut down, the collision hall and transfer tunnels are constructed, and the detector is transferred into the collision hall. As for the NMD, this model would be especially appropriate for the future experimental areas in the ISP layout.

The key features of this model are:

- The beamline is 201 ft [61.3 m] below the surface.
- The interaction point is located 50 ft [15.5 m] from one end of the collision hall, 23 ft [7 m] above the floor.
- A collision hall, 60 ft W × 200 ft L × 65 ft H [18 × 60 × 20 $m^3$].
- An assembly hall, 60 ft W × 200 ft L × 65 ft H [18 × 60 × 20 $m^3$].
- Two 23-ft W × 60-ft L [7 × 19 $m^2$] equipment transfer tunnels with provisions for two 23-ft– [7 m] thick shielding doors with storage recesses.
- A 15-ft– [5 m] diameter personnel and utility shaft with a tunnel leading to the assembly hall.
- A 30-ft– [9 m] diameter equipment shaft and tunnel leading to the assembly hall.
- Two overhead 50/20-ton cranes in the collision hall, running on a common set of rails.
- Two overhead 50/20-ton cranes in the assembly hall, running on a common set of rails.
- A tunnel leading from the assembly hall to the utility bypass tunnel.

The dimensions for the halls allow for access around the detector, operating hook height, and laydown area for the assembly of the detector and components.

The completed underground facilities are shown on drawings K5-01 and K5-02. The cut-and-cover construction features are shown on drawings K5-03 and K5-04. The NMD components and underground assembly sequence are shown on drawings K5-05, K5-06, and K5-07.

### 6.4.2 Collision Hall

The dimensions of the collision hall are shown on Drawing K5-02, exclusive of the thickness of walls and floors of tunnels, shafts, or halls.

The hall length is 200 ft [60 m] and provides the laydown area for the detector assembly (see drawings K5-06 and K5-07).

The interaction point is located 50 ft [15.5 m] from one end of the hall, leaving approximately 18 ft [5.5 m] clearance between the instrumented steel at the end of the detector and the end of the hall. There is approximately 18 ft [5.5 m] clearance between the detector and the corresponding end wall at the other end of the hall.

The centerline of the collision hall is offset 3 ft [1 m] from the centerline of the detector. The inside width of the hall is 60 ft [18 m], which provides clearance for passage of personnel and small equipment and the installation of HVAC equipment and electrical cables adjacent to the assembled detector. There is 3-ft [1 m] clearance between the large magnets and one side wall and 10-ft [3 m] clearance between these magnets and the opposite side wall.

The two cranes in the collision hall have hook heights of 50 ft [16 m], which provides 11 ft [3.5 m] clearance above the instrumented steel. The hall ceiling is 15 ft [4 m] above the hook height, which results in an overall height of 65 ft [20 m].

### 6.4.3 Assembly Hall

The hall is 200 ft L × 60 ft W [60 × 18 $m^2$] (see Drawing K5-02). As can be seen on drawings K5-06 and K5-07, these dimensions provide adequate laydown area during assembly of the detector.

The two cranes in the assembly hall have hook heights of 50 ft [16 m], while the overall hall height is 65 ft [20 m].

### 6.4.4 Shafts and Tunnels

In this model, the underground facilities contain a circular equipment shaft, a circular personnel shaft, the hall access tunnels, and the utility bypass tunnel (see Drawing K5-02).

The 3-ft– [9 m] diameter equipment shaft includes a stairwell and vent duct, which allows a 16 × 16-$ft^2$ [5 × 5 $m^2$] module to be lowered into the assembly hall. The shaft is located 201 ft [61.4 m] from one end of the equipment hall, which provides a 20-ft [5.5 m] buffer zone to the construction excavation.

The 15-ft– [5 m] diameter personnel shaft is sized to include an elevator, a stairwell, and a vent duct and is located 195 ft [59.4 m] from the end of the assembly hall away from the equipment shaft. This separation, as well as the position of the personnel shaft (perpendicular to the longitudinal axis of the assembly hall), provides a 20-ft [5.5 m] buffer zone to the construction excavation.

The utility bypass tunnel has a diameter of 10 ft to match the dimensions of the collider ring tunnel. The straight section of the tunnel is 40 ft [13.5 m] from the wall of the assembly hall. The tunnel's bending radius is at 130 ft [40 m] to allow passage of a loaded dipole magnet transporter. Access to the bypass tunnel is provided from the assembly hall.

### 6.4.5 Equipment Transfer Tunnels and Shielding

The two halls are connected through two equipment transfer tunnels (see Drawing K5-02 for dimensions). The tunnels are 23 ft wide by 60 ft long by approximately 45 ft high [7 × 19 × 14 $m^3$]. They are positioned to provide a minimum of interference with detector construction, yet allow unobstructed mobility of personnel and equipment between the two halls. The centerline of the tunnel at one end of the halls is aligned with the interaction point to facilitate installation of the large vertex magnet during the final detector construction phase.

Each equipment transfer tunnel is provided with a shielding door with a storage recess. The door is 23 ft [7 m] thick and large enough to completely close off the equipment transfer tunnel. A 3-ft– [1 m] wide labyrinth at each equipment transfer tunnel allows passage through the tunnels when the shielding doors are in place.

Shielding between the halls is provided by the unexcavated rock between them. The halls are separated by 60 ft [19 m]; this separation provides adequate shielding during operation and maintains the structural integrity of the rock adjacent to the halls.

### 6.4.6 Cranes

Both halls contain two 50/20-ton top-running bridge cranes with spans of approximately 56 ft [17 m] and common sets of rails.

### 6.4.7 Construction Features

The construction features are shown on drawings K5-03 and K5-04. The dimensions of the basic cut-and-cover excavation are shown on Drawing K5-03.

There are nominally six benches 26 ft [8 m] high between the surface and the collision hall roof. The benches have sloped walls (30 degrees to vertical) and 6-ft– [2 m] wide berms. There is an additional 8 ft [2.4 m] of topsoil excavation at the surface. At the base of the excavation (roof of the hall) is a 40-ft– [12 m] wide berm all around.

The excavation of the halls proper is by two vertical benches down to the floors. An unexcavated 56-ft– [17 m] thick rock pillar separates the two hall excavations. The equipment transfer tunnels are bored through this rock. The 40-ft– [12 m] wide, straight, inclined ramp extends approximately 1650 ft [503 m] from the hall roof berm to the surface at a 10 percent grade.

Shafts are located so that there is a minimum of 18 ft [5.5 m] of clearance between the edge of the excavation and the inside edge of a shaft.

### 6.4.8 K5 Surface Facilities

In the Texas proposal K5 is in the east cluster, next to experimental area K6, in a cultivated area 3.9 miles southwest of the town of Palmer. The site is at the intersection of state route 879 and an unnamed road running north, and 2.2 miles west of interstate Highway 45. Site K5 is intersected by a telephone line parallel to the Road 870.

The parameters for K5 are summarized in Table 6-3. The site's surface activities flow and an organization diagram are shown in figures 6-7 and 6-8, and Figure 6-9 shows plan and section views of the experiment.

The BCD experiment modeled at K5 weighs 12,000 tons and is partly preassembled (tracking and Ring-Imaging Cerenkov (RICH) components) at the surface in a single building (K 53) which also houses support space and shop facilities. Other conventional buildings are:

- K 51: Site access monitoring
- K 52: Utilities

Access at the top of the shafts is provided as follows:

- K 54: All detector components, personnel and utilities.
- K 55: Personnel, and cables from the detector to the operations building.

All buildings have a height of 45 ft [14 m] and the same orientation parallel to the main ring.

Table 6-3
K5 Surface Facilities Parameters

| Buildings | | | Functional Divisions in Buildings | | Utilities | | | |
|---|---|---|---|---|---|---|---|---|
| | Area ($m^2$) | l × w × h (m) | Function | Area ($m^2$) | Crane (t) | Hook Height (m) | Ele-vators | HVAC* |
| K51 | 64 | 08×08×04 | Access | 64 | | | | HVAC |
| K52 | 1,456 | 56×26×12 | | | 5 | 8 | | V |
| | | | Cooling | 300 | | | | |
| | | | Electrical | 300 | | | | |
| | | | Ventilation | 400 | | | | |
| | | | Cryogenics | 400 | | | | |
| K53 | 4,480 | 80×56×12 | Office | 1,344 | | | 2 | HVAC |
| | | | Shop + RICH | 1,344 | 5 | 8 | | HVAC |
| | | | Tracking | 1,344 | 5 | 8 | | HVAC |
| K54 | 1,456 | 56×26×12 | Unloading | 1,344 | 30/5 | 8 | 1 | V |
| K55 | 208 | 26×08×06 | Access | | | | 1 | V |
| Total | 7,664 | | | | | | | |
| Exterior Areas | | | | | | | | |
| K5E1 | 3,070 | | Parking | | | | | |
| K5E2 | 1,900 | | Shop Storage | | | | | |
| K5E3 | 1,640 | | Assembly Storage | | | | | |
| K5E4 | 2,320 | | Utilility Storage | | | | | |
| K5E5 | 16,860 | | Paved Area | | | | | |
| K5E6 | 35,900 | | Extensions, Landscaping | | | | | |
| Site Total | 69,354 | | | | | | | |

*Heating, Ventilating, and Air Conditioning Systems

### 6.4.9 Assembly Sequence

The assembly of the BCD is divided into four steps. Assembly steps 1 and 2 are shown on Drawing K5-06 along with sections through the two halls. Assembly steps 3 and 4 are shown on Drawing K5-07. Drawing K5-05 shows the individual detector components with nomenclature and approximate weights.

With the exception of the muon steel, all components of the detector are assembled in the assembly hall. The muon steel pieces are constructed in their operating positions in the collision hall because of their relatively large sizes and weights—approximately 3,100 tons.

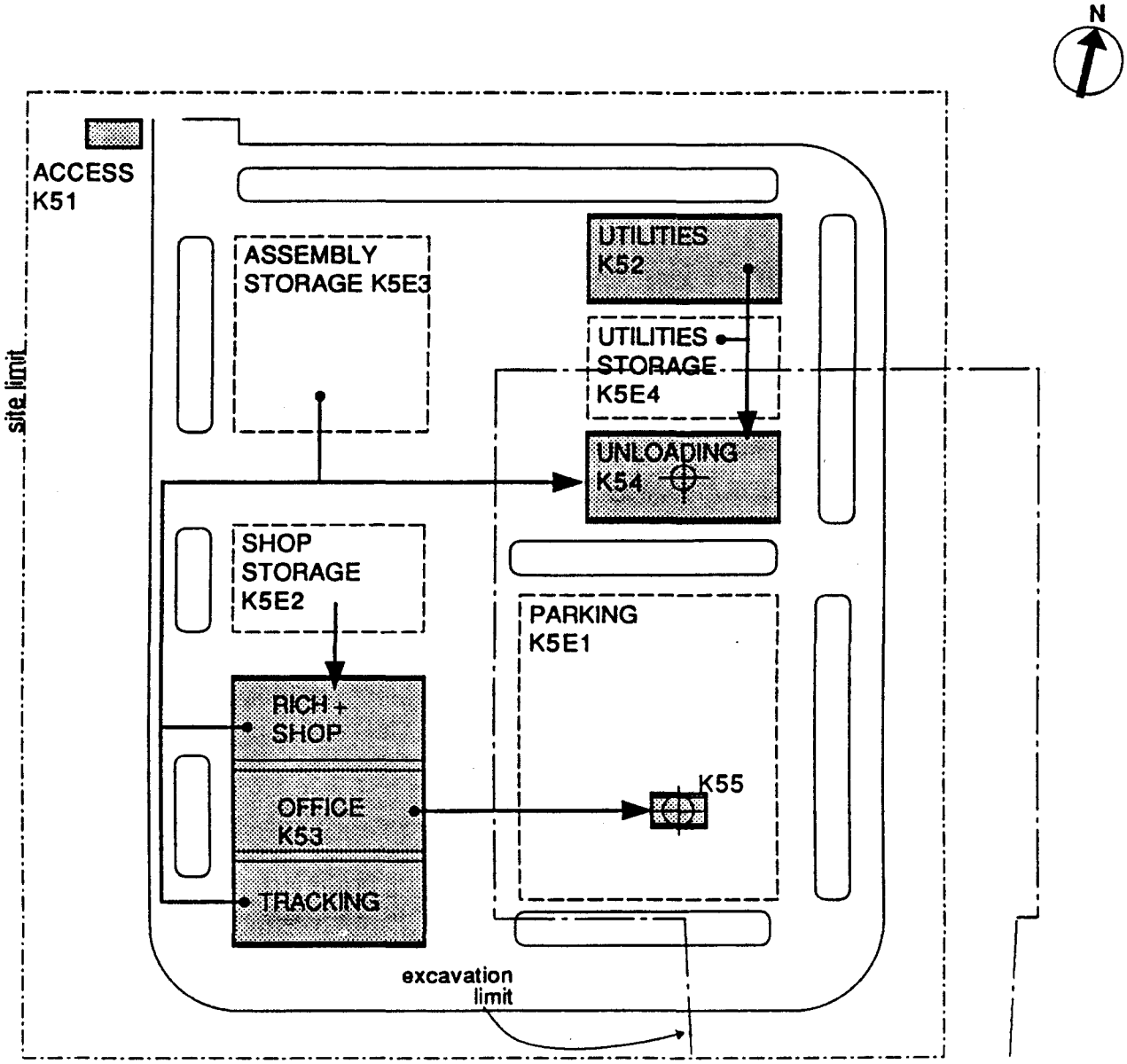


**Figure 6-7. K5 surface activities flow.**

**Step 1**

The muon steel is assembled in the collision hall using components brought in through the equipment shaft and transfer tunnels. Magnets 1 and 2 are assembled in the assembly hall. Magnet 2 is assembled directly in line with a transfer tunnel so that, upon completion, it can be more easily moved to the collision hall. Magnet 1 is not moved to the collision hall until step 4, below, and is, therefore, assembled at the end of the assembly hall so as not to obstruct the transfer tunnel during step 3, below.

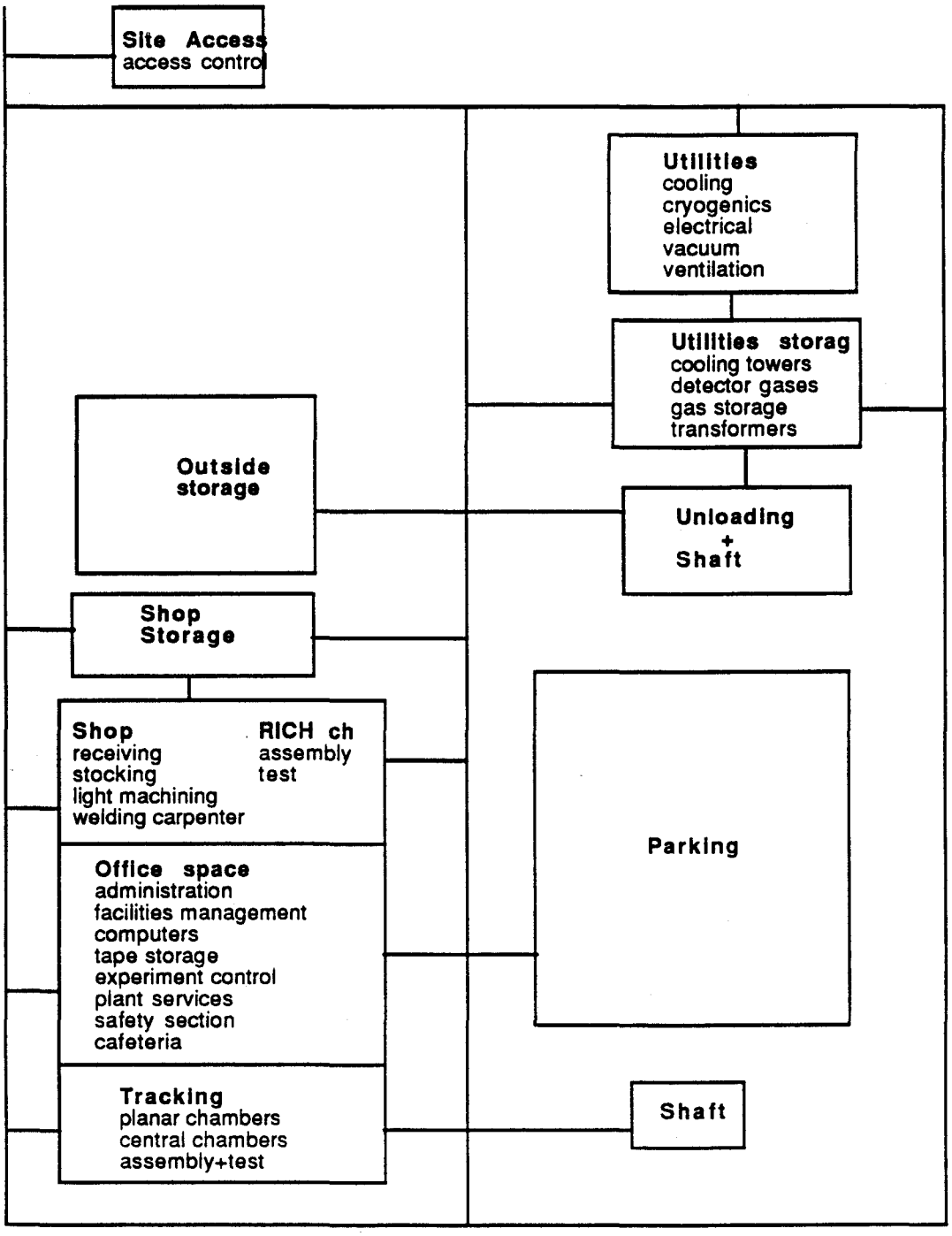


**Figure 6-8. K5 surface facilities organization.**

**Step 2**

At the start of step 2, magnet 2 is moved from the assembly hall to its position in the collision hall through a transfer tunnel. Assembly of the tracking, Transition Radiation Detector, RICH detector, and electromagnetic (em) calorimetry is then started in the assembly hall. These components are positioned in the assembly hall to facilitate their transfer to the collision hall.

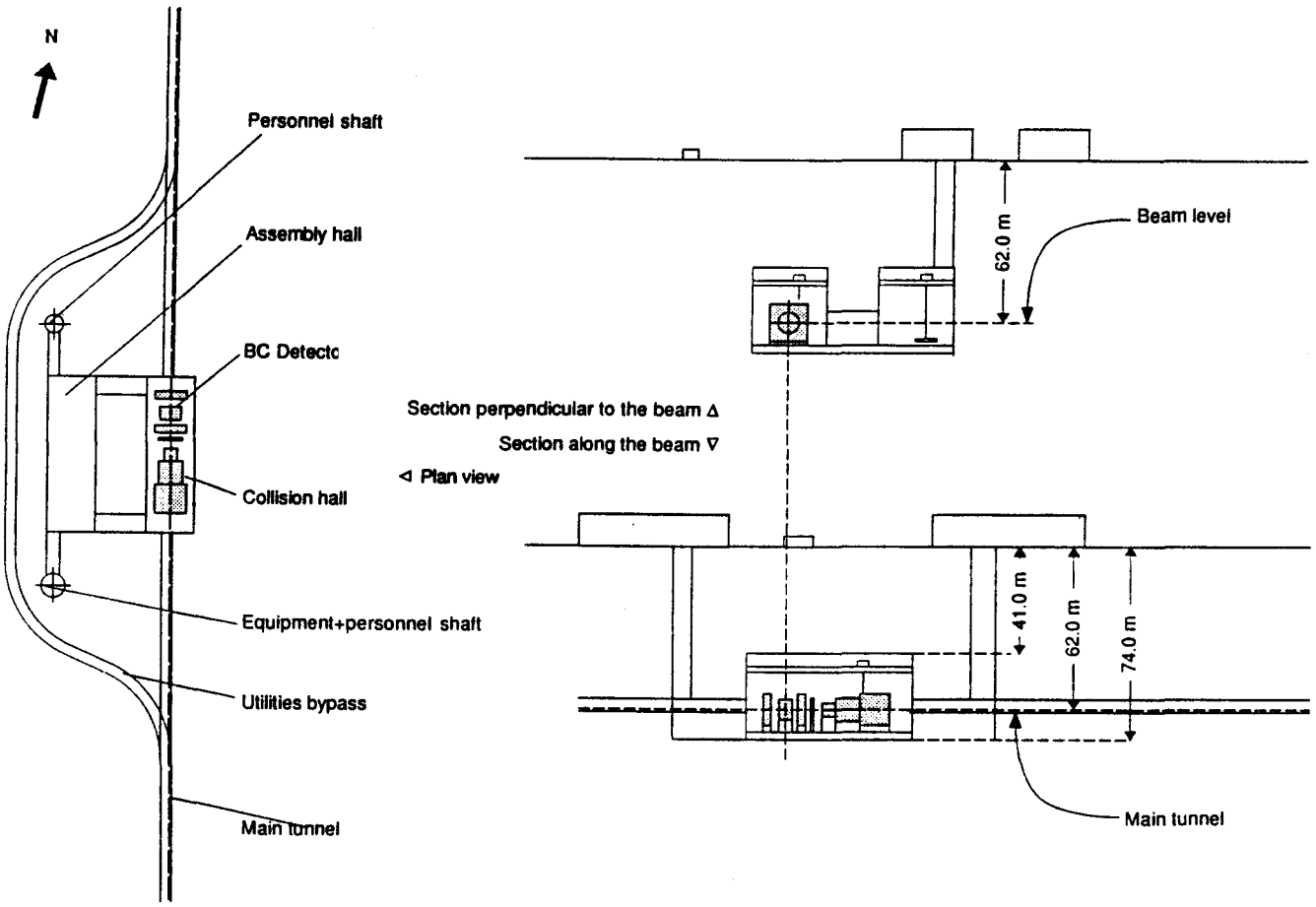


**Figure 6-9. K5 BCD experiment.**

**Step 3**

All components in the assembly hall, with the exception of magnet 1, are moved into the collision hall through the transfer tunnels, where they are installed in their respective positions.

**Step 4**

Magnet 1 is moved into the collision hall and installed to complete the detector.

### 6.4.10 K5 Model Schedules

Model schedules K5-1 through K5-6 present information on the development of interaction region K5. K5-1, K5-2, and K5-3 are the underground hall, surface, and detector components of the integrated K5 schedule. K5-4 is a one-page summary of the integrated schedule. Schedule K5-4 shows that, according to this model, conventional construction at K5 may about two-and-a-half years, while detector development may extend almost nine years.

Model schedules K5-5 and K5-6 illustrate the length of time conventional construction may add to detector development. Schedule K5-5 presents the critical path for the BCD without accounting for building availability; Schedule K5-6 shows the BCD critical path with buildings ready at the estimated dates. Schedule K5-5 shows the path running through the Ring-Imaging Cherenkov detectors and succeeding installation tasks and the estimated duration to be about seven-and-a-quarter years. In the schedule, taking account of building availability, K5-6, the critical path is through the tasks of installing components on the beam line. This schedule indicates that building availability considerations add about one and three-quarter years to the detector completion date.

## 6.5 Interaction Region K6: DØ Upgrade Detector

### 6.5.1 General Description

The model adopted for the structures required for the DØ Upgrade Detector follows the model used for UA-2 at CERN and adopted for the LEP detectors at CERN. In this model a single long hall orthogonal to the collider tunnel provides both an assembly area for the detector and the collision area. Detector assembly takes place in the area away from the collider beam, and the detector is then moved onto the beam line. At LEP no shielding is required, since these $e^+e^-$ detectors are self-shielding. Provision for the shielding required for p-p operation, especially if cranes are to span between both collision and assembly areas, is a major complication of this model. In the model no detector construction takes place in the collision area of the hall. The detector is preassembled in the assembly area, which is shielded from the circulating proton beams. When the assembly is completed, the detector is moved into the collision area and the shielding restored. In practice this model reduces to the approach used for the present DØ experiment with the added complication of crane coverage in the collision area and of depth in handling the large mass of shielding. This approach allows the detector to be constructed initially and later moved out of the beam for maintenance or upgrade while the rest of the experimental program continues to operate.

Key features of this model include:

- The beamline is 212 ft [64.6 m] below the surface.
- The interaction point is 33 ft [10 m] from one end of the hall, 23 ft [7 m] above the hall floor.
- A combination collision/assembly hall, 75 ft W × 260 ft L × 70 ft H [23 × 79 × 21.5 $m^3$], transverse to the beamline.
- Removable shielding blocks separate the assembly and collision areas during operation. (Needs to be analyzed.)
- Two steps in the hall floor for detector assembly and roll-out purposes.
- One 15-ft– [5 m] diameter personnel and utility shaft with tunnel.
- One 30-ft– [9 m] diameter equipment shaft with tunnel.
- One 30 × 40-$ft^2$ [9 × 12 $m^2$] construction shaft from the surface to the hall roof.
- One utility bypass tunnel.
- Two overhead cranes: one 100/100-ton crane in the collision hall end and one 100/20-ton crane in the assembly hall end. (Track continuity needs to be analyzed.)

The dimensions of the hall allow space for preassembly of components, for a shielding wall, and the removal of DØ detector assembly as a unit. The functional design of this hall uses the same principles as the original DØ hall at Fermilab.

The basic features of the facility are shown on drawings K6-01 and K6-02. The cut-and-cover construction features are shown on drawings K6-03 and K6-04. The DØ components and underground assembly sequence are shown on drawings K6-05, K6-06, and K6-07.

### 6.5.2 Collision/Assembly Hall

The dimensions of the combined collision and assembly hall, excluding wall and floor thickness, are shown on Drawing K6-02.

The hall, its length transverse to the beamline, is 260 ft long by 75 ft wide [$79 \times 23$ m$^2$], and the height varies from 80 ft [24.2 m] in the collision hall area to 60 ft [18.2 m] in the assembly area. The collision area is 60 ft wide [19 m] (transverse to the beamline), and the interaction point is located 33 ft [10 m] from the hall end and 33 ft [10.2 m] above floor level. The detector is centered on the main axis of the collision/assembly hall. The fully assembled detector has a clearance of 12 ft [3.8 m] from the end of the collision hall and 8 ft [2.5 m] from either side wall.

The hook height of the collision hall crane is 65 ft [20.2 m] above the floor and 13 ft [4 m] above the muon chambers, leaving a 13-ft [4 m] clearance to the crown. The overall collision hall height is 80 ft [24.2 m].

The assembly hall is 200 ft [60 m] long (transverse to the beamline). A channel 80 ft long by 40 ft wide by 7 ft deep [$24 \times 12 \times 2$ m$^3$] runs through the assembly hall. The hall is 65 ft [20.2 m] high above this channel. A rail system in the channel is capable of transporting the detector (exclusive of the muon chambers and toroids) into the assembly area. The floor of the channel is 13 ft [4 m] above the base of the collision area. The rest of the assembly area provides sufficient space for a clean room and the remaining detector components. The floor of the assembly area is 20 ft [6 m] above the base of the collision area. The collision area is 60 ft [18.2 m] high in this region. Crane hook height is 45 ft [14.2 m] above the floor.

### 6.5.3 Shafts and Tunnels

The underground facilities are serviced by a rectangular construction shaft, a circular equipment shaft, a circular personnel shaft, the hall access tunnels, and the utility bypass tunnel (see Drawing K6-02).

The $30 \times 40$-ft$^2$ [$9 \times 12$ m$^2$] construction shaft is primarily used to lower the central muon toroid and end muon toroid components. During operation of the accelerator, the shaft is plugged with shielding blocks.

The 30-ft– [9 m] diameter equipment shaft includes a stairwell and vent duct. This shaft allows a 16 × 16-ft$^2$ [5 × 5 m$^2$] preassembled module to be lowered into the assembly area. The shaft is located approximately 210 ft [64.5 m] from one end of the equipment hall, which provides a 20-ft [5.5 m] buffer zone to the construction excavation.

The personnel shaft has an inside diameter of 15 ft [5 m] and is sized to include an elevator, a stairwell, and a vent duct. The shaft is 205 ft [62.5 m] from one end of the assembly hall, providing a buffer zone of 20 ft [5.5 m] to the construction excavation.

The bypass tunnel has a 10-ft [3 m] diameter to match the dimensions of the collider ring tunnel. The straight section of the bypass tunnel is 30 ft [8.8 m] from the wall end of the hall. The tunnel's bending radius is 130 ft [40 m] to allow passage of a loaded dipole transporter. Access to the bypass tunnel is provided from the assembly hall.

### 6.5.4 Cranes

The collision area is equipped with one 100/100-ton crane with two separate 100-ton hooks and is primarily intended to handle the large quantities of steel comprising the central muon toroids and end muon toroids. This steel will be lowered down the construction shaft by a 200-ton gantry crane located at the surface.

The assembly area features one 100/20-ton, top-running bridge crane with both hooks on the same trolley and will be used for component assembly.

Both cranes have a span of approximately 75 ft [23 m] and run on a common set of rails.

### 6.5.5 Construction Features

The construction features are shown on drawings K6-03 and K6-04. The dimensions of the basic cut-and-cover excavation are shown on Drawing K6-03.

There are nominally six benches 26 ft [8 m] high between the surface and the collision hall roof. The benches have inclined walls (30 degrees to vertical) and 7-ft– [2 m] wide berms. There is an additional 8 ft [2.4 m] of topsoil excavation at the surface. At the base of the excavation (roof of the hall) is a 40-ft– [12 m] wide berm on all four sides.

Excavation of the hall will be by a single, vertical bench down to the hall floor. The 40-ft– [12-m] wide, straight, inclined ramp extends about 1725 ft [526 m] from the hall roof berm to the surface at a 10 percent grade.

Shafts are located so that there is a minimum of 20 ft [5.5 m] clearance between the edge of the excavation and the inside edge of a shaft.

### 6.5.6 K6 Surface Site Facilities

In the Texas proposal K6 is in the east cluster, next to experimental area K5, in a cultivated field 3.5 miles northwest of Ennis. The site is adjacent to the west side of state route 1722 and 0.9 miles south of the Southern Pacific Railroad tracks.

The parameters for K6 are summarized in Table 6-4. The site's surface activities flow and an organization diagram are shown in figures 6-10 and 6-11, and Figure 6-12 shows plan and section views of the experiment.

Table 6-4
K6 Surface Facilities Parameters

| Buildings | | | Functional Divisions in Buildings | | Utilities | | | |
|---|---|---|---|---|---|---|---|---|
| | Area ($m^2$) | l × w × h (m) | Function | Area ($m^2$) | Crane (t) | Hook Height (m) | Ele-vators | HVAC* |
| K61 | 64 | 08×08×04 | Site Control | 64 | | | | HVAC |
| K62 | 1,456 | 56×26×12 | | | 5 | 8 | | V |
| | | | Cooling | 300 | | | | |
| | | | Electrical | 300 | | | | |
| | | | Ventilation | 400 | | | | |
| | | | Cryogenics | 400 | | | | |
| K63 | 1,456 | 26×56×12 | Office | 1,344 | | | 2 | HVAC |
| K64 | 4,480 | 56×80×12 | Catcher | 1,344 | 30/5 | 8 | | HVAC |
| | | | Iron | 1,344 | 100/20 | 8 | | HVAC |
| | | | Calorimeter | 1,344 | 30/5 | 8 | | HVAC |
| K65 | 2,968 | 56×53×12 | Conv. Coils | 1,344 | 5 | 8 | | HVAC |
| | | | Muon chambers | 1,344 | 5 | | | |
| K66 | 2,968 | 56×53×12 | Shop | 1,344 | 5 | 8 | | HVAC |
| | | | Tracking | 1,344 | 5 | 8 | | HVAC |
| K67 | 1,456 | 26×56×12 | Access | 1,344 | 100/20 | 8 | 1 | HVAC |
| K68 | | 26×08×06 | Access | 208 | | | 1 | HVAC |
| Total | 14,848 | | | | | | | |
| Exterior Areas | | | | | | | | |
| K6E1 | 1,960 | | Parking | | | | | |
| K6E2 | 1,350 | | Shop Storage | | | | | |
| K6E3 | 4,820 | | Assembly Storage | | | | | |
| K6E4 | 2,400 | | Utilility Storage | | | | | |
| K6E5 | 26,930 | | Paved Area | | | | | |
| K6E6 | 33,500 | | Extensions, Landscaping | | | | | |
| Site Total | 85,808 | | | | | | | |

*Heating, Ventilating, and Air Conditioning Systems

The DØ upgraded experiment modeled at K6 weighs 19,000 tons and is partly preassembled at the surface in the following buildings:

- K 64: Iron modules, catcher and calorimeter.

- K 65: Muon chambers and conventional coils.
- K 66: Tracking devices. (K66 also houses the shop facilities).

Other conventional buildings are:

- K 61: Site access monitoring
- K 62: Utilities
- K 63: Support building
- K 66: Shop

Access buildings are located at the top of both shafts:

- K 67: All detector components, personnel, utilities.
- K 68: Personnel, and cables from the detector to the office building.

All buildings have a height of 45 ft [14 m] and are oriented parallel to the main ring.

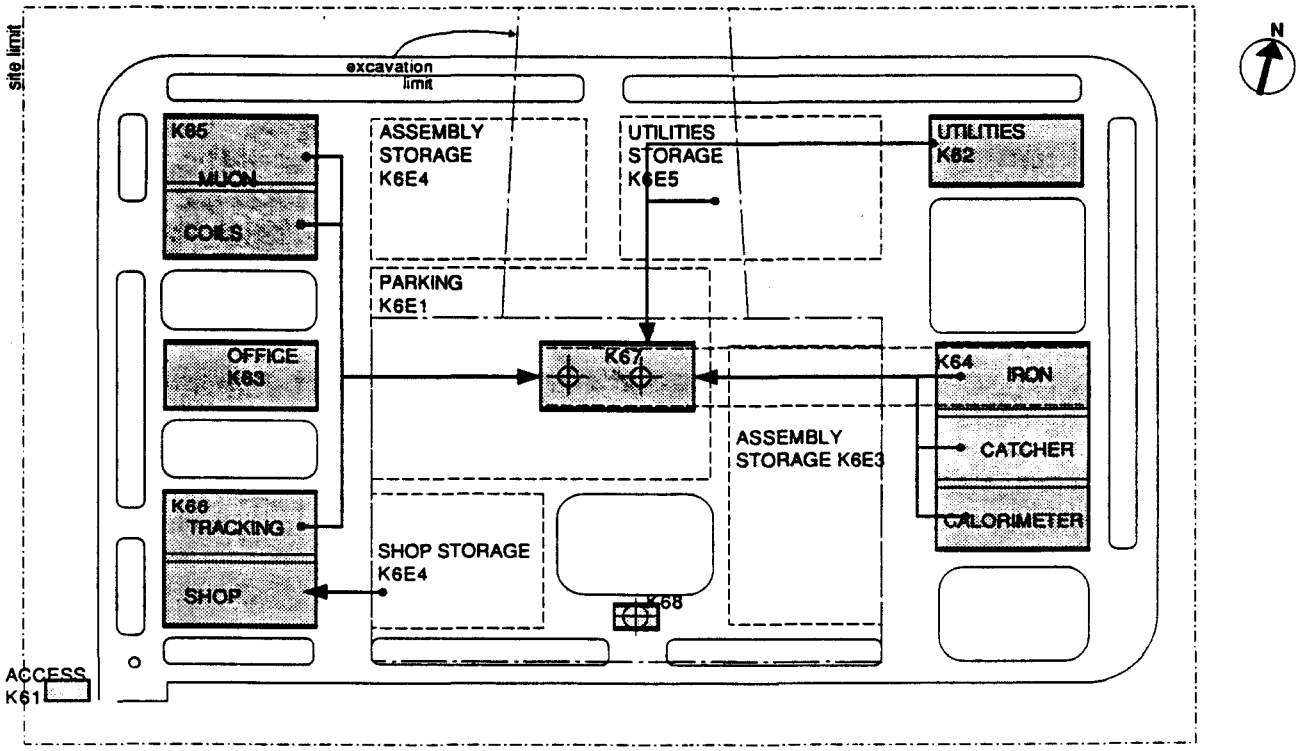


Figure 6-10. K6 surface activities flow.

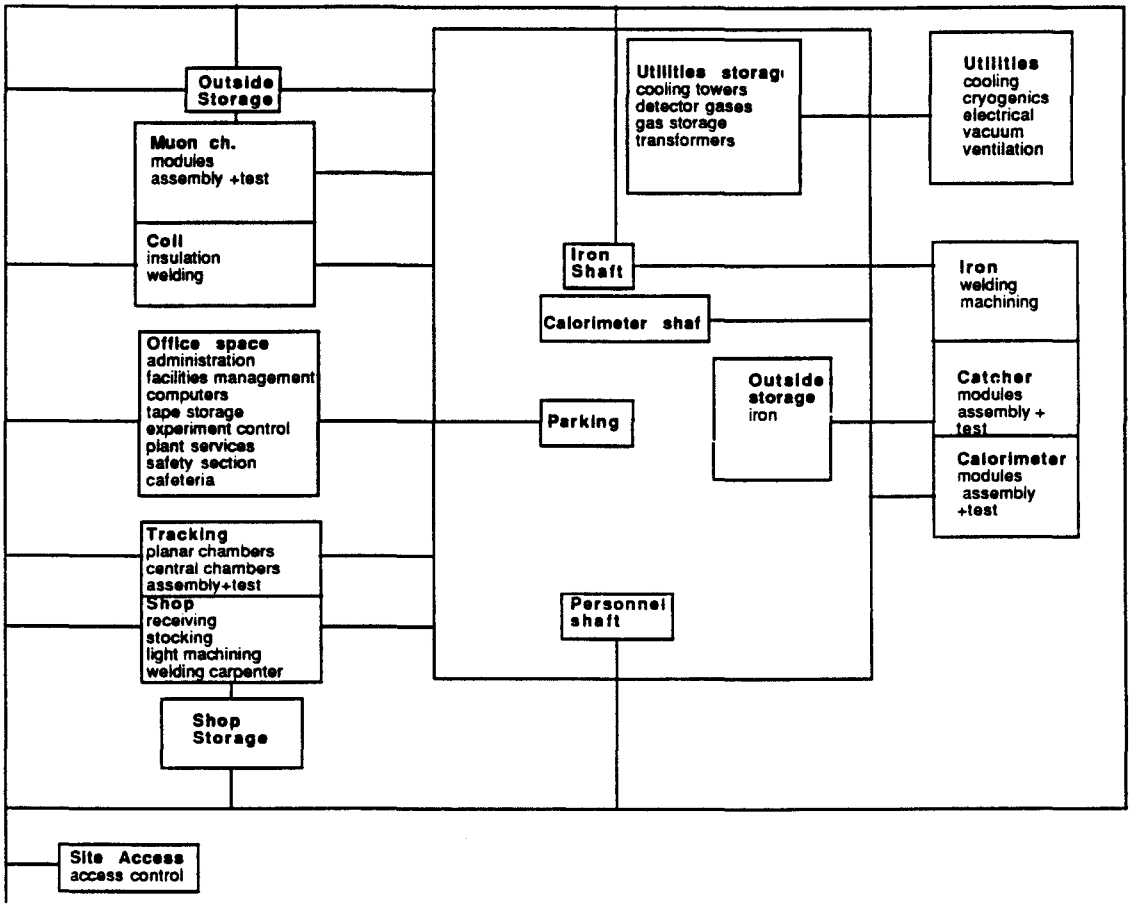


**Figure 6-11. K6 surface facilities organization.**

### 6.5.7 Assembly Sequence

Assembly of the Upgraded DØ Detector is divided into four steps. All four steps are shown on Drawing K6-07 along with a section through the hall. Drawing K6-05 shows the individual detector components with nomenclature and approximate weights.

The central and end toroids are constructed in their operating positions, because of their relatively large size and weight—approximately 15,000 tons in total.

#### Step 1

The calorimeter shells are brought into the hall through the equipment shaft. A temporary clean room is constructed to protect the sensitive calorimeter components from damage resulting from other activities in the hall. The modules are installed in the calorimeter shells. At the same time, at the opposite end of the hall, the central toroid is constructed from components lowered down the construction shaft by a gantry-type crane.

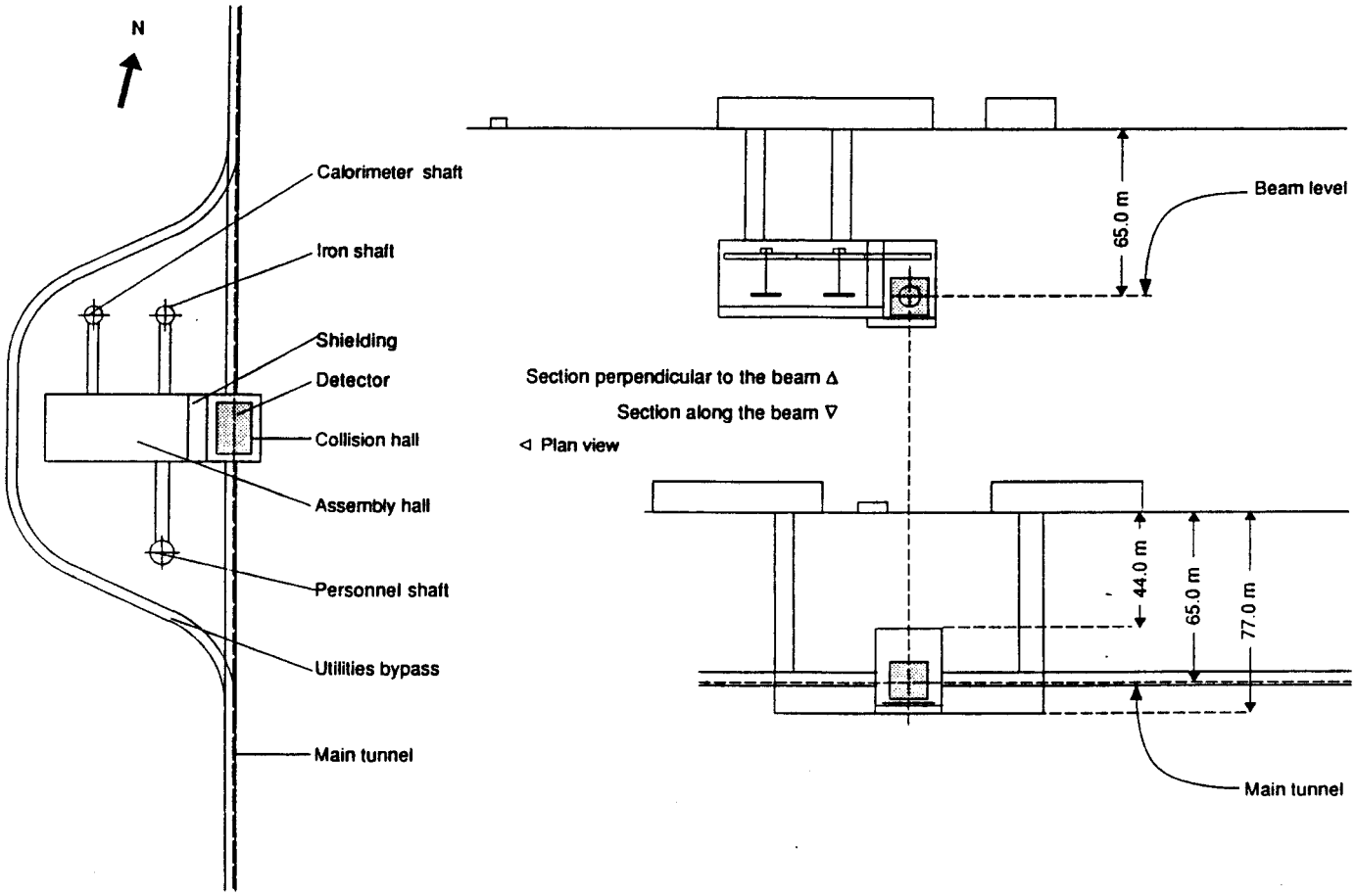


**Figure 6-12. K6 DØ upgrade experiment.**

**Step 2**

The central and end cap catcher calorimeters are assembled in the central portion of the hall. The end toroids are assembled in the collision area.

**Step 3**

The catcher chambers are installed in the central and end cap catcher calorimeters, and the muon chambers are installed and aligned in the central and end toroids.

**Step 4**

The central catcher nearest to the calorimeter assembly area is moved to one side of the hall. The completed calorimeter is then rotated through 90 degrees and moved into the catcher. The catcher is closed and the entire assembly moved as a single unit through the central toroid doors and into its operating position. The floor of the hall has been designed to make these operations possible; the calorimeter assembly area is raised above the catcher

assembly area itself, which is raised relative to the collision area. This arrangement is shown in section A of Drawing K6-07.

### 6.5.8 K6 Model Schedules

Model schedules K6-1 through K6-6 present information on the development of interaction region K6. K6-1, K6-2, and K6-3 are the underground hall, surface, and detector components of the integrated K6 schedule. K6-4 is a one-page summary of the integrated schedule. Schedule K6-4 shows that, according to this model, conventional construction at K6 may run for more than two years, while detector development may extend eight-and-a-quarter years.

Model schedules K6-5 and K6-6 illustrate the length of time conventional construction may add to detector development. Schedule K6-5 presents the critical path for the upgraded DØ without accounting for building availability; Schedule K6-6 shows the upgraded DØ critical path with buildings ready at the estimated dates. Schedule K6-5 shows the path running through the steel design, fabrication, and assembly tasks and the estimated duration to be about five and three quarter years. In the schedule taking account of building availability, K6-6, the critical path is again through the steel tasks, but surface building availability comes on the path, and so the parth begins with fabrication and not design. This schedule indicates that building availability considerations add about two and a half years to the detector completion date.

## References

1. Proceedings of the workshop on Experiments, Detectors and Experimental Areas. R. Donaldson and M.G.D. Gilchriese, eds. World Scientific, Berkeley, CA (1987).
2. R. W. Fast, et al., SSC Detector Solenoid. SSC Report No. SSC-N-553 (1988).
3. R. W. Fast, et al., SSC Detector Solenoid. SSC Report No. SSC-N-526 (1988).

MODEL SCHEDULE FOR K1 HALL CONSTRUCTION (OPEN CUT)

| Task Name | Start Date | Duratn (Days) | End Date |
|---|---|---|---|
| Award Contract | 16-Nov-92 | 0 | 16-Nov-92 |
| Site Preparation | 16-Nov-92 | 30 | 30-Dec-92 |
| Open Cut Excavation | 16-Nov-92 | 200 | 31-Aug-93 |
| Topsoil Removal/Drainage | 16-Nov-92 | 20 | 15-Dec-92 |
| Ramp & Pit Excavation | 9-Dec-92 | 75 | 26-Mar-93 |
| Mucking Reorganization | 29-Mar-93 | 10 | 9-Apr-93 |
| Hall Exc. -Beam & Shaft Tunnel | 12-Apr-93 | 100 | 31-Aug-93 |
| Hall Structure | 18-Aug-93 | 225 | 11-Jul-94 |
| Floor Mud-Mat & Prep. | 18-Aug-93 | 20 | 15-Sep-93 |
| Detector Foundations | 16-Sep-93 | 55 | 6-Dec-93 |
| Final Floor | 7-Dec-93 | 30 | 19-Jan-94 |
| Sidewalls & Crane Support | 20-Jan-94 | 60 | 14-Apr-94 |
| Roof | 15-Apr-94 | 60 | 11-Jul-94 |
| Hall Structure Complete | 12-Jul-94 | 0 | 12-Jul-94 |
| Over Hall Struc. & Backfill | 13-Jun-94 | 180 | 28-Feb-95 |
| Placement of Fdns. Columns | 13-Jun-94 | 30 | 25-Jul-94 |
| Backfill to 1st Bench Level | 26-Jul-94 | 20 | 22-Aug-94 |
| 1st Floor Placement | 23-Aug-94 | 20 | 20-Sep-94 |
| Con.Over Hall Lev.&Sidefill | 7-Sep-94 | 70 | 15-Dec-94 |
| O.H.S Beneficial Occupancy | 16-Dec-94 | 0 | 16-Dec-94 |
| Surface Rehabilitation | 16-Dec-94 | 50 | 28-Feb-95 |
| Beam Tunnel Link-ups | 22-Jun-93 | 195 | 31-Mar-94 |
| Excavation | 22-Jun-93 | 30 | 3-Aug-93 |
| Concrete | 20-Jan-94 | 50 | 31-Mar-94 |
| Beam Tunnel Structure Complete | 1-Apr-94 | 0 | 1-Apr-94 |
| E Shaft Structure | 1-Apr-94 | 125 | 27-Sep-94 |
| Surface Operations | 1-Apr-94 | 35 | 19-May-94 |
| Shaft Sink | 13-May-94 | 55 | 1-Aug-94 |
| Concrete | 2-Aug-94 | 40 | 27-Sep-94 |
| E Shaft Structure Complete | 28-Sep-94 | 0 | 28-Sep-94 |
| P1 Shaft Structure | 18-Aug-93 | 330 | 8-Dec-94 |
| Surface Operations | 18-Aug-93 | 35 | 6-Oct-93 |
| Shaft Sink | 7-Oct-93 | 50 | 20-Dec-93 |
| Concrete | 12-Oct-94 | 40 | 8-Dec-94 |
| P1 Shaft Structure Complete | 9-Dec-94 | 0 | 9-Dec-94 |
| P2 Shaft Structure | 16-Sep-93 | 360 | 21-Feb-95 |
| Surface Operations | 16-Sep-93 | 35 | 4-Nov-93 |
| Shaft Sink | 5-Nov-93 | 50 | 19-Jan-94 |
| Concrete | 23-Dec-94 | 40 | 21-Feb-95 |
| P2 Shaft Structure Complete | 22-Feb-95 | 0 | 22-Feb-95 |

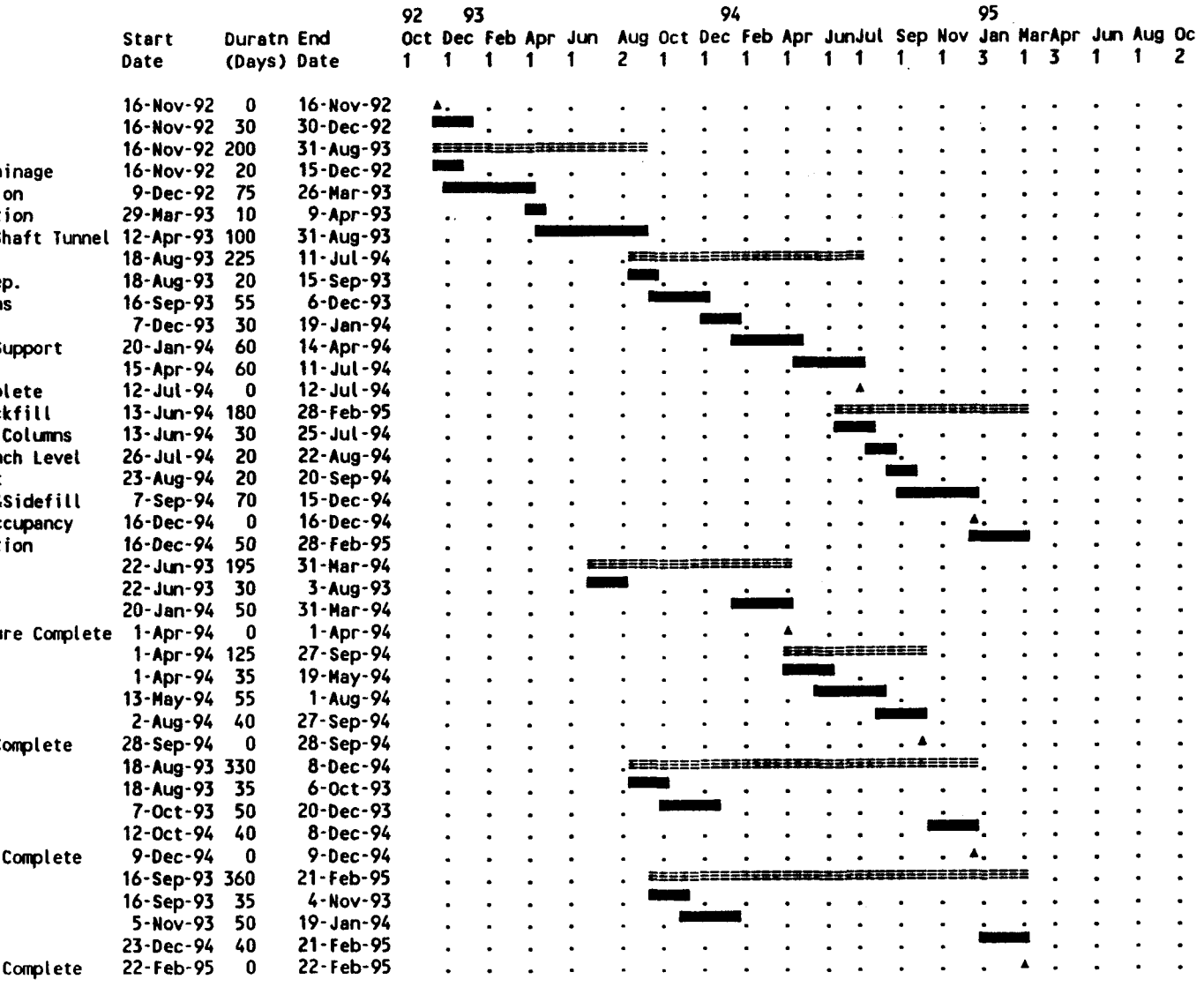


Detail Task — Summary Task — Milestone
(Started) — (Started) — Conflict
(Slack) — (Slack) — Resource delay
Scale: 2 weeks per character

Schedule K1 - 1

MODEL SCHEDULE FOR K1 SURFACE CONSTRUCTION

| Task Name | Start Date | Duratn (Mths) | End Date |
|---|---|---|---|
| K1 Surface (phase I) | 15-Nov-92 | 12.5 | 30-Nov-93 |
| K11 - K17 CONTRACT | 15-Nov-92 | 0 | 15-Nov-92 |
| Mobilization | 15-Nov-92 | 0.6 | 1-Dec-92 |
| Site Preparation | 2-Dec-92 | 2 | 31-Jan-93 |
| Foundations | 2-Jan-93 | 4 | 30-Apr-93 |
| Structural Systems | 1-Mar-93 | 4 | 29-Jun-93 |
| Walls & Roof Panels | 1-May-93 | 4 | 29-Aug-93 |
| Mech., Elec., & Furn. Install. | 1-Jul-93 | 5 | 29-Nov-93 |
| Roads & Landscape | 1-Aug-93 | 4 | 30-Nov-93 |
| BENEFICIAL OCCUPANCY | 1-Dec-93 | 0 | 1-Dec-93 |
| K1 Surface (phase II) | 14-Sep-94 | 8.3 | 21-May-95 |
| K18, K19, K111 CONTRACT | 14-Sep-94 | 0 | 14-Sep-94 |
| Mobilization | 14-Sep-94 | 0.5 | 27-Sep-94 |
| Equipment Shaft Headhouse | 28-Sep-94 | 4 | 27-Jan-95 |
| P1 Shaft Headhouse | 9-Dec-94 | 3 | 9-Mar-95 |
| P2 Shaft Headhouse | 22-Feb-95 | 3 | 21-May-95 |
| BENEFICIAL OCCUPANCY | 22-May-95 | 0 | 22-May-95 |

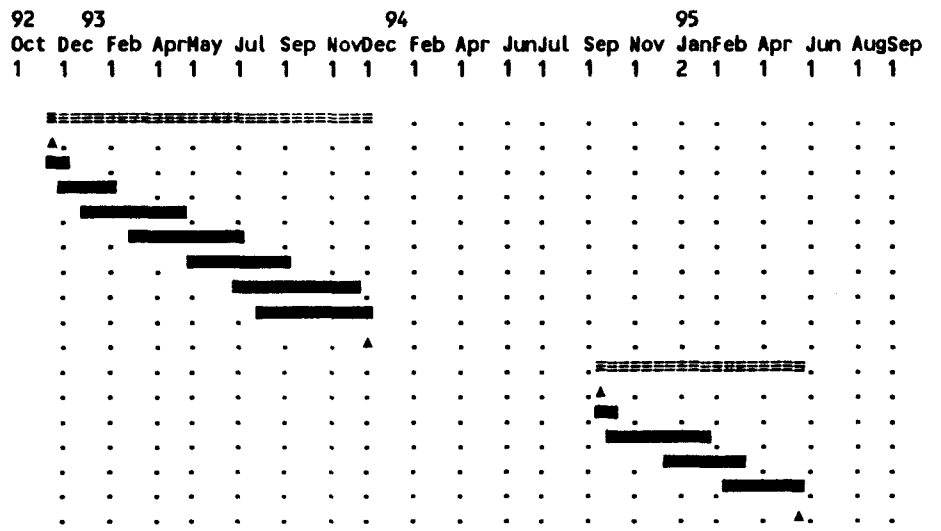


Detail Task — Summary Task — Milestone
(Started) — (Started) — Conflict
(Slack) — (Slack) — Resource delay

Scale: 2 weeks per character

TIME LINE Gantt Chart Report, Strip 1

Schedule K1 - 2

MODEL SCHEDULE FOR K1 DETECTOR (Large Solenoid)

| Task Name | Start Date | Duratn (Mths) | End Date |
|---|---|---|---|
| BUILDINGS | 1-Dec-93 | 16.3 | 11-Apr-95 |
| Buildings K11 - K17 Ready | 1-Dec-93 | 0 | 1-Dec-93 |
| Experimental Hall Complete | 12-Jul-94 | 0 | 12-Jul-94 |
| Clean Room Construction | 12-Jul-94 | 9 | 11-Apr-95 |
| Exp. Hall Beneficial Occupancy | 9-Mar-95 | 0 | 9-Mar-95 |
| FUND ENG. DESIGN & SPECIF. R&D | 1-Oct-90 | 0 | 1-Oct-90 |
| STEEL | 2-Jan-91 | 78.2 | 8-Jul-97 |
| Steel Design | 2-Jan-91 | 12 | 31-Dec-91 |
| Flux Return Construction | 2-Jan-92 | 41 | 31-May-95 |
| Procure Steel Flux Return | 2-Jan-92 | 18 | 2-Jul-93 |
| Flux Subassembly Fabricatio | 1-Dec-93 | 18 | 31-May-95 |
| Endcaps Construction | 2-Jan-92 | 43 | 31-Jul-95 |
| Procure Steel Endcap | 2-Jan-92 | 12 | 31-Dec-92 |
| Endcap Subassembly Fabricat | 1-Jun-95 | 2 | 31-Jul-95 |
| Internal Toroids Construction | 2-Jan-92 | 46 | 30-Oct-95 |
| Procure Steel Int Toroids | 2-Jan-92 | 12 | 31-Dec-92 |
| Int Toriod Subassembly Fabr | 1-Aug-95 | 3 | 30-Oct-95 |
| Warm Coil | 2-Jan-92 | 35 | 30-Nov-94 |
| Procure Coil Copper | 2-Jan-92 | 12 | 31-Dec-92 |
| Form and Insulate Warm Coil | 1-Dec-93 | 12 | 30-Nov-94 |
| Assembly | 9-Mar-95 | 28 | 8-Jul-97 |
| Flux Return in Exp Hall | 9-Mar-95 | 18 | 7-Sep-96 |
| Endcap 1 | 8-Sep-96 | 2 | 6-Nov-96 |
| Endcap 2 | 7-Nov-96 | 2 | 8-Jan-97 |
| Internal Toroid 1 & Coil | 8-Jan-97 | 3 | 7-Apr-97 |
| Internal Toroid 2 & Coil | 7-Apr-97 | 3 | 8-Jul-97 |
| Steel Work Complete | 8-Jul-97 | 0 | 8-Jul-97 |
| COIL | 1-Oct-90 | 89 | 1-Mar-98 |
| Coil Design | 1-Oct-90 | 9 | 30-Jun-91 |
| Procure Materials | 1-Jul-91 | 6 | 29-Dec-91 |
| Coil Fabrication | 1-Dec-93 | 48 | 30-Nov-97 |
| Install Superconducting Coil | 1-Dec-97 | 3 | 1-Mar-98 |
| MUON CHAMBER | 1-Oct-90 | 77.3 | 9-Mar-97 |
| Muon Chamber R&D | 1-Oct-90 | 12 | 30-Sep-91 |
| Chamber & Support Prototype | 1-Oct-91 | 12 | 30-Sep-92 |
| Produce Muon Chambers | 1-Dec-93 | 30 | 31-May-96 |
| Install & Align Muon Chambers | 8-Sep-96 | 6 | 9-Mar-97 |
| LIQUID ARGON CALORIMETER | 1-Oct-90 | 83 | 30-Aug-97 |
| LAC Modules | 1-Oct-90 | 68 | 31-May-96 |
| LAC Module R&D | 1-Oct-90 | 12 | 30-Sep-91 |
| Module Prototype & Tests | 1-Oct-91 | 18 | 31-Mar-93 |
| Module Fabrication | 1-Dec-93 | 30 | 31-May-96 |
| LAC Cryostat | 1-Apr-91 | 77 | 30-Aug-97 |
| LAC Cryostat Design | 1-Apr-91 | 12 | 31-Mar-92 |
| Cryostat Fabrication | 1-Apr-92 | 24 | 31-Mar-94 |
| Install Modules in Cryostat | 2-Dec-95 | 12 | 30-Nov-96 |

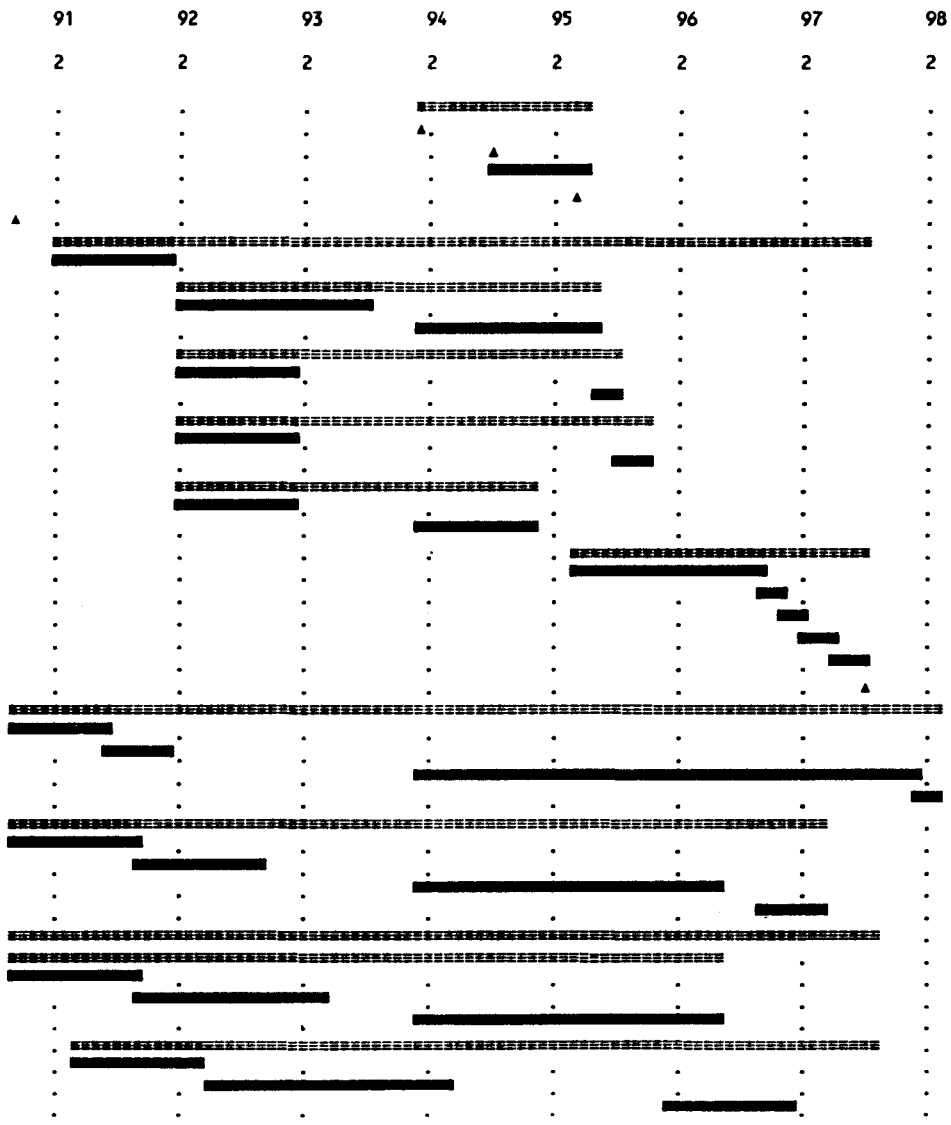


Schedule K1 - 3, page 1 of 2

| | | | |
|---|---|---|---|
| Cable & Test LAC Cryostat | 1-Dec-96 | 6 | 31-May-97 |
| Weld Vessel & Test | 1-Jun-97 | 3 | 30-Aug-97 |
| INTERNAL DETECTOR | 1-Oct-90 | 99 | 30-Dec-98 |
| Internal Detector Specificatio | 1-Oct-90 | 9 | 30-Jun-91 |
| Vertex Chamber | 1-Jul-91 | 60 | 30-Jun-96 |
| Vertex Chamber R&D | 1-Jul-91 | 18 | 31-Dec-92 |
| Chamber Prototype | 2-Jan-93 | 18 | 30-Jun-94 |
| Vertex Chamber Fabrication | 1-Jul-94 | 24 | 30-Jun-96 |
| Central Tracker | 1-Jul-91 | 66 | 29-Dec-96 |
| Central Tracker R&D | 1-Jul-91 | 18 | 31-Dec-92 |
| Tracker Prototype | 2-Jan-93 | 18 | 30-Jun-94 |
| Central Tracker Fabrication | 1-Jul-94 | 30 | 29-Dec-96 |
| Internal Detector Assembly | 2-Mar-98 | 10 | 30-Dec-98 |
| Install LAC in Coil | 2-Mar-98 | 2 | 30-Apr-98 |
| Install Trackers & Chamber | 1-May-98 | 2 | 30-Jun-98 |
| Cryo-Cable Hook-up & Cooldo | 1-May-98 | 4 | 30-Aug-98 |
| Cable & Test Trackers | 1-Jul-98 | 6 | 30-Dec-98 |
| DETECTOR OPERATIONAL | 31-Dec-98 | 0 | 31-Dec-98 |

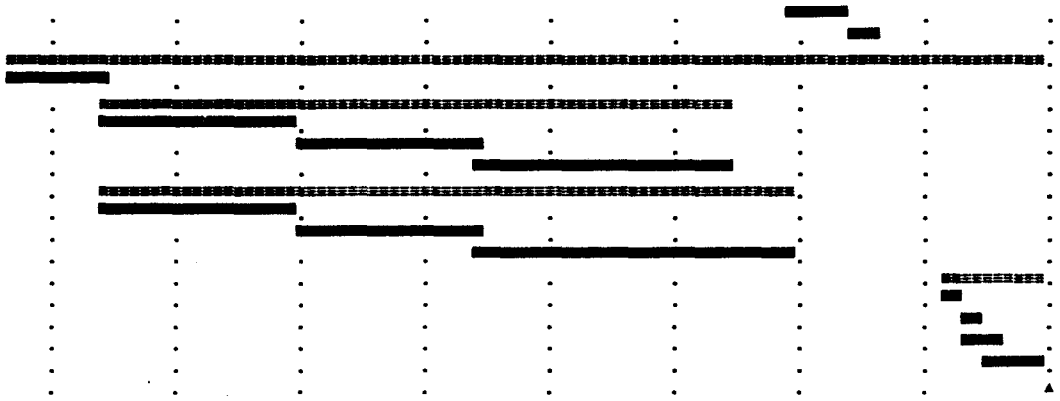

Detail Task — Summary Task — Milestone
(Started) — (Started) — Conflict
(Slack) — (Slack) — Resource delay

Scale: 1 month per character

**Schedule K1 - 3, page 2 of 2**

SUMMARY OF MODEL SCHEDULE OF K1 DEVELOPMENT

| Task Name | | Start Date | Duratn (Mths) | End Date |
|---|---|---|---|---|
| + Near Cluster Land Acquisition | | 1-Apr-89 | 15.3 | 9-Jul-90 |
| + A-E/CM Selection | | 15-Jan-89 | 8.6 | 1-Oct-89 |
| Near Cluster Infrastructure | | 2-Jan-90 | 38.7 | 24-Mar-93 |
| Electrical | (Title 1-3) | 2-Jan-90 | 14.4 | 15-Mar-91 |
| Water | (Title 1-3) | 1-Apr-90 | 9.5 | 15-Jan-91 |
| Communications | (Title 1-3) | 1-Jun-90 | 7.2 | 6-Jan-91 |
| Roads | (Title 1-3) | 15-Aug-91 | 19.3 | 24-Mar-93 |
| Auxiliary Systems | (Title 1-3) | 15-Mar-92 | 5 | 15-Aug-92 |
| Phys Rsrch Div Detector Activ. | | 1-Jun-89 | 35.5 | 15-May-92 |
| + Preliminary detector R&D | | 1-Jun-89 | 28 | 1-Oct-91 |
| Approval process | | 15-May-90 | 24.1 | 15-May-92 |
| First letter of intent | | 15-May-90 | 0 | 15-May-90 |
| PAC Meeting | | 1-Jul-90 | 1 | 1-Aug-90 |
| Proposal for experiments | | 15-May-91 | 0 | 15-May-91 |
| PAC Meeting | | 1-Jul-91 | 1 | 1-Aug-91 |
| Stage I approval | | 1-Oct-91 | 0 | 1-Oct-91 |
| DETECTOR DESIGN REPORT | | 15-May-91 | 12.1 | 15-May-92 |
| K1 IR Construction | | 15-May-91 | 48.2 | 21-May-95 |
| Preliminary Design Studies | | 15-May-91 | 4.5 | 30-Sep-91 |
| Conceptual Design | | 1-Oct-91 | 2.5 | 14-Dec-91 |
| Title I | | 15-Dec-91 | 3 | 14-Mar-92 |
| Title II | | 15-Mar-92 | 6 | 14-Sep-92 |
| Contracts bid | | 15-Sep-92 | 2 | 14-Nov-92 |
| CONTRACTS AWARDED | | 15-Nov-92 | 0 | 15-Nov-92 |
| + K1 SURFACE (phase I) | | 15-Nov-92 | 12.5 | 30-Nov-93 |
| Phase I Beneficial Occupancy | | 1-Dec-93 | 0 | 1-Dec-93 |
| + K1 HALL CONSTRUCTION | | 15-Nov-92 | 28.9 | 11-Apr-95 |
| Hall Beneficial Occupancy | | 10-Mar-95 | 0 | 10-Mar-95 |
| + K1 SURFACE (phase II) | | 14-Sep-94 | 8.3 | 21-May-95 |
| Phase II Beneficial Occupancy | | 22-May-95 | 0 | 22-May-95 |
| K1 DETECTOR (Large Solenoid) | | 1-Oct-90 | 99.1 | 31-Dec-98 |
| FUND ENG. DESIGN & SPECIF. R&D | | 1-Oct-90 | 0 | 1-Oct-90 |
| + STEEL | | 2-Jan-91 | 78.3 | 9-Jul-97 |
| + COIL | | 1-Oct-90 | 89.1 | 2-Mar-98 |
| + MUON CHAMBER | | 1-Oct-90 | 77.3 | 8-Mar-97 |
| LIQUID ARGON CALORIMETER | | 1-Oct-90 | 83.1 | 2-Sep-97 |
| + LAC Modules | | 1-Oct-90 | 68.1 | 2-Jun-96 |
| + LAC Cryostat | | 31-Mar-91 | 77.1 | 2-Sep-97 |
| INTERNAL DETECTOR | | 1-Oct-90 | 99.1 | 31-Dec-98 |
| Internal Detector Specifica | | 1-Oct-90 | 9 | 30-Jun-91 |
| + Vertex Chamber | | 1-Jul-91 | 60 | 30-Jun-96 |
| + Central Tracker | | 1-Jul-91 | 66 | 29-Dec-96 |
| + Internal Detector Assembly | | 3-Mar-98 | 10 | 31-Dec-98 |
| DETECTOR OPERATIONAL | | 2-Jan-99 | 0 | 2-Jan-99 |

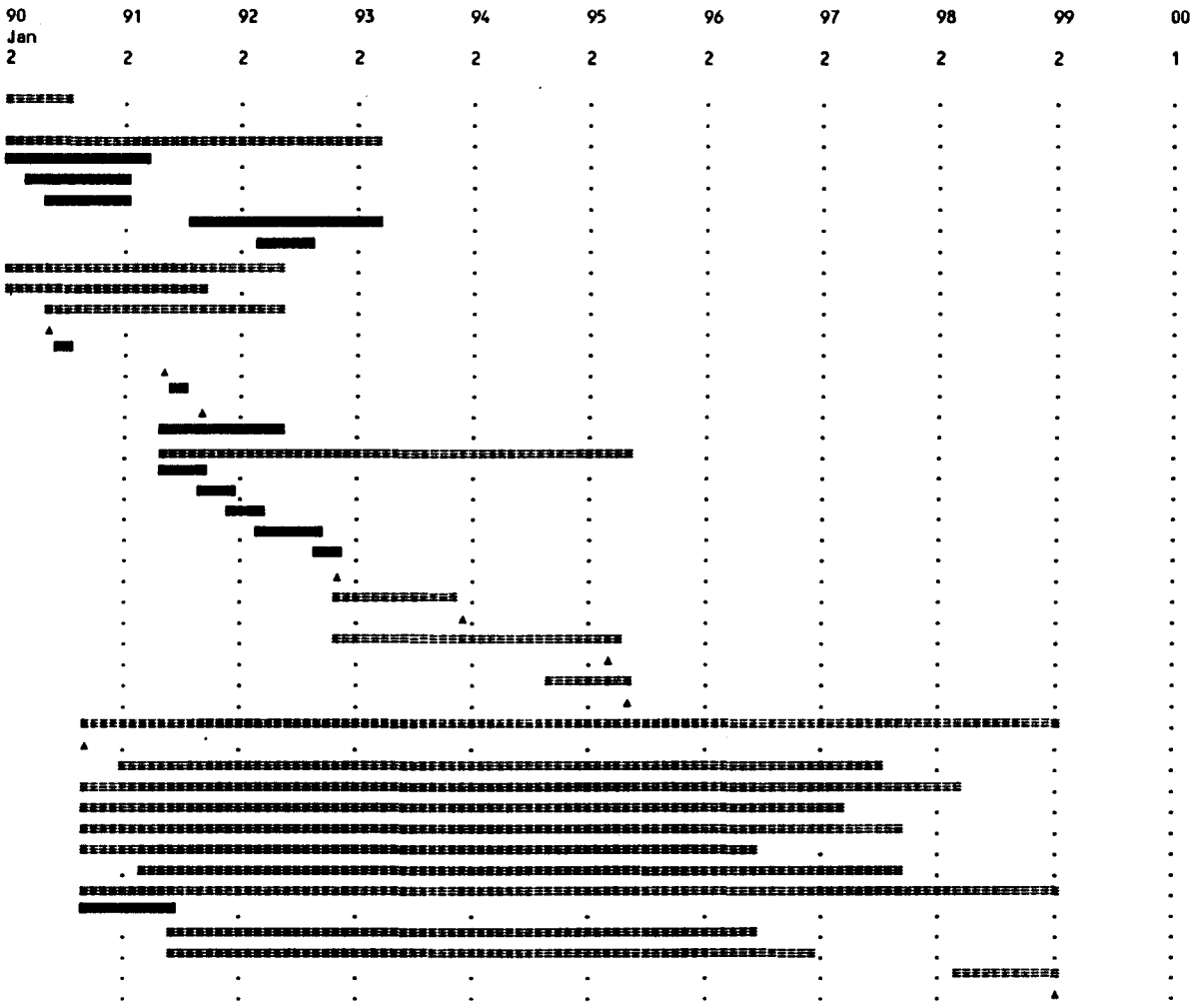


Detail Task  Summary Task  ▲ Milestone

**Schedule K1 - 4**

CRITICAL PATH FOR LSD w/o considering building availability

Select filter : Critical Path

| Task Name | Start Date | Duratn (Mths) | End Date |
|---|---|---|---|
| BUILDINGS | 2-Jan-90 | 9 | 2-Oct-90 |
| Buildings K11 - K17 Ready | 2-Jan-90 | 0 | 2-Jan-90 |
| Hall Structure Complete | 2-Jan-90 | 0 | 2-Jan-90 |
| Exp. Hall Beneficial Occupancy | 2-Jan-90 | 0 | 2-Jan-90 |
| FUND ENG. DESIGN & SPECIF. R&D | 1-Oct-90 | 0 | 1-Oct-90 |
| LIQUID ARGON CALORIMETER | 1-Oct-90 | 75 | 29-Dec-96 |
| LAC Modules | 1-Oct-90 | 60 | 30 Sep-95 |
| LAC Module R&D | 1-Oct-90 | 12 | Sep-91 |
| Module Prototype & Tests | 1-Oct-91 | 18 | 31-Mar-93 |
| Module Fabrication | 1-Apr-93 | 30 | 30-Sep-95 |
| LAC Cryostat | 1-Apr-91 | 69 | 29-Dec-96 |
| Install Modules in Cryostat | 2-Apr-95 | 12 | 31-Mar-96 |
| Cable & Test LAC Cryostat | 1-Apr-96 | 6 | 29-Sep-96 |
| Weld Vessel & Test | 30-Sep-96 | 3 | 29-Dec-96 |
| INTERNAL DETECTOR | 1-Oct-90 | 85 | 29-Oct-97 |
| Internal Detector Assembly | 30-Dec-96 | 10 | 29-Oct-97 |
| Install LAC in Coil | 30-Dec-96 | 2 | 28-Feb-97 |
| Install Trackers & Chamber | 1-Mar-97 | 2 | 29-Apr-97 |
| Cable & Test Trackers | 30-Apr-97 | 6 | 29-Oct-97 |
| DETECTOR OPERATIONAL | 30-Oct-97 | 0 | 30-Oct-97 |

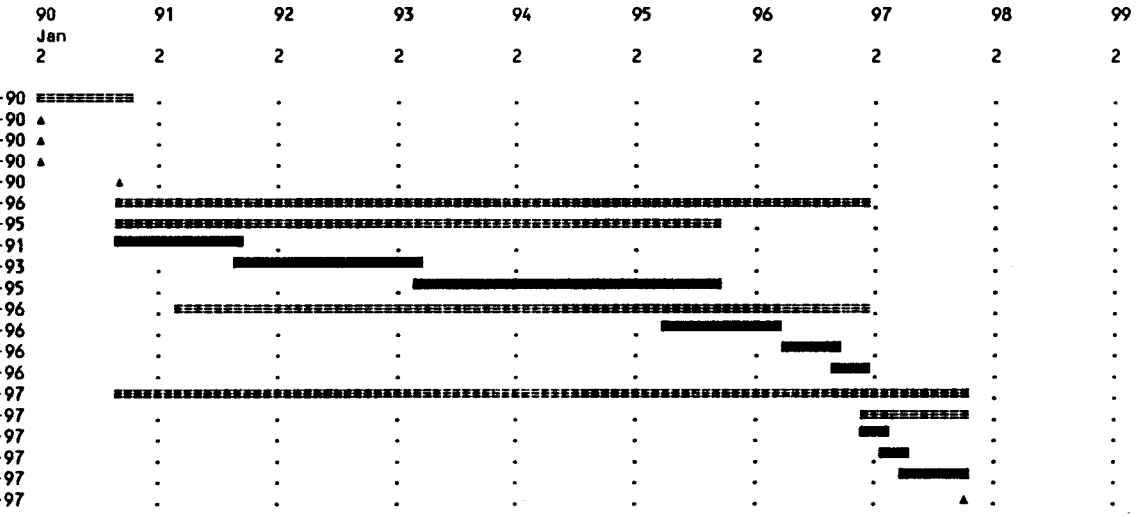


Detail Task — Summary Task — Milestone
(Started) — (Started) — Conflict
(Slack) — (Slack) — Resource delay

Scale: 1 month per character

TIME LINE Gantt Chart Report, Strip 1

Schedule K1 - 5

CRITICAL PATH FOR LSD considering building availability

Select filter : Critical Path

| Task Name | Start Date | Duratn (Mths) | End Date |
|---|---|---|---|
| BUILDINGS | 1-Dec-93 | 16.3 | 11-Apr-95 |
| Buildings K11 - K17 Ready | 1-Dec-93 | 0 | 1-Dec-93 |
| Hall Structure Complete | 12-Jul-94 | 0 | 12-Jul-94 |
| Exp. Hall Beneficial Occupancy | 9-Mar-95 | 0 | 9-Mar-95 |
| FUND ENG. DESIGN & SPECIF. R&D | 1-Oct-90 | 0 | 1-Oct-90 |
| COIL | 1-Oct-90 | 89 | 1-Mar-98 |
| Coil Fabrication | 1-Dec-93 | 48 | 30-Nov-97 |
| Install Superconducting Coil | 1-Dec-97 | 3 | 1-Mar-98 |
| INTERNAL DETECTOR | 1-Oct-90 | 99 | 30-Dec-98 |
| Internal Detector Assembly | 2-Mar-98 | 10 | 30-Dec-98 |
| Install LAC in Coil | 2-Mar-98 | 2 | 30-Apr-98 |
| Install Trackers & Chamber | 1-May-98 | 2 | 30-Jun-98 |
| Cable & Test Trackers | 1-Jul-98 | 6 | 30-Dec-98 |
| DETECTOR OPERATIONAL | 31-Dec-98 | 0 | 31-Dec-98 |

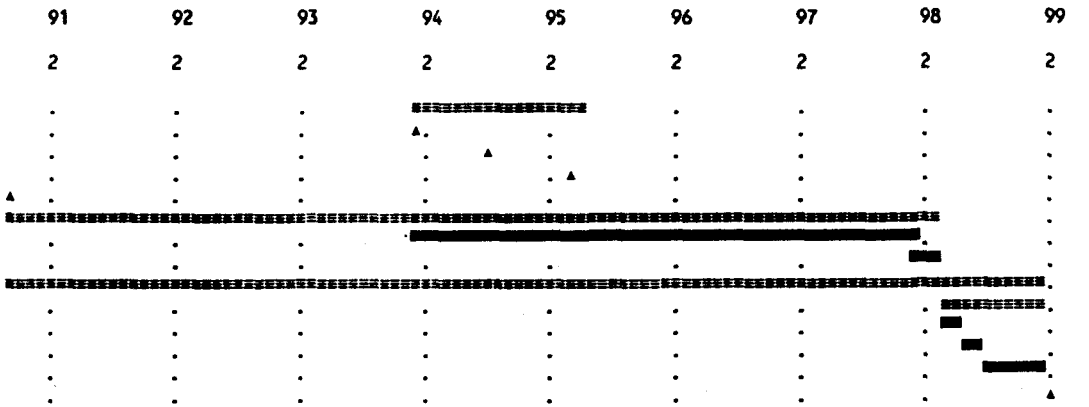


Detail Task — Summary Task — Milestone
(Started) — (Started) — Conflict
(Slack) — (Slack) — Resource delay

Scale: 1 month per character

TIME LINE Gantt Chart Report, Strip 1



**Schedule K1 - 6**

MODEL SCHEDULE FOR K2 HALL CONSTRUCTION (OPEN CUT)

| Task Name | Start Date | Duratn (Days) | End Date |
|---|---|---|---|
| Award Contract | 16-Nov-92 | 0 | 16-Nov-92 |
| Site Preparations | 16-Nov-92 | 30 | 30-Dec-92 |
| Open Cut Excavations | 16-Nov-92 | 270 | 13-Dec-93 |
| Topsoil Removal/Drainage | 16-Nov-92 | 30 | 30-Dec-92 |
| Ramp & Pit Excavation | 9-Dec-92 | 100 | 30-Apr-93 |
| Mucking Reorganization | 3-May-93 | 10 | 14-May-93 |
| Hall Excavation & Ass. Tuns. | 17-May-93 | 125 | 11-Nov-93 |
| Pillar Rockbolting | 12-Nov-93 | 20 | 13-Dec-93 |
| Hall Structure | 29-Oct-93 | 430 | 13-Jul-95 |
| Floor Mud-Mat & Prep. | 29-Oct-93 | 30 | 13-Dec-93 |
| Detector Foundations | 14-Dec-93 | 55 | 3-Mar-94 |
| Final Floor | 4-Mar-94 | 40 | 28-Apr-94 |
| Sidewalls & Crane Support | 29-Apr-94 | 80 | 22-Aug-94 |
| Roof | 23-Aug-94 | 100 | 16-Jan-95 |
| Hall Structure Complete | 17-Jan-95 | 0 | 17-Jan-95 |
| Backfill & Construction Shaft | 17-Jan-95 | 75 | 2-May-95 |
| Surface Rehabilitation | 3-May-95 | 50 | 13-Jul-95 |
| Beam Tunnel Link-ups | 28-Jul-93 | 240 | 11-Jul-94 |
| Excavation | 28-Jul-93 | 30 | 8-Sep-93 |
| Concrete | 29-Apr-94 | 50 | 11-Jul-94 |
| E Shaft Structure | 25-Aug-93 | 125 | 24-Feb-94 |
| Surface Operations | 25-Aug-93 | 35 | 14-Oct-93 |
| Shaft Sink | 7-Oct-93 | 55 | 28-Dec-93 |
| Concrete | 29-Dec-93 | 40 | 24-Feb-94 |
| E Shaft Structure Compl. | 25-Feb-94 | 0 | 25-Feb-94 |
| P1 Shaft Structure | 23-Sep-93 | 155 | 5-May-94 |
| Surface Operations | 23-Sep-93 | 35 | 11-Nov-93 |
| Shaft Sink | 12-Nov-93 | 50 | 26-Jan-94 |
| Concrete | 11-Mar-94 | 40 | 5-May-94 |
| P1 Shaft Structure Compl. | 6-May-94 | 0 | 6-May-94 |

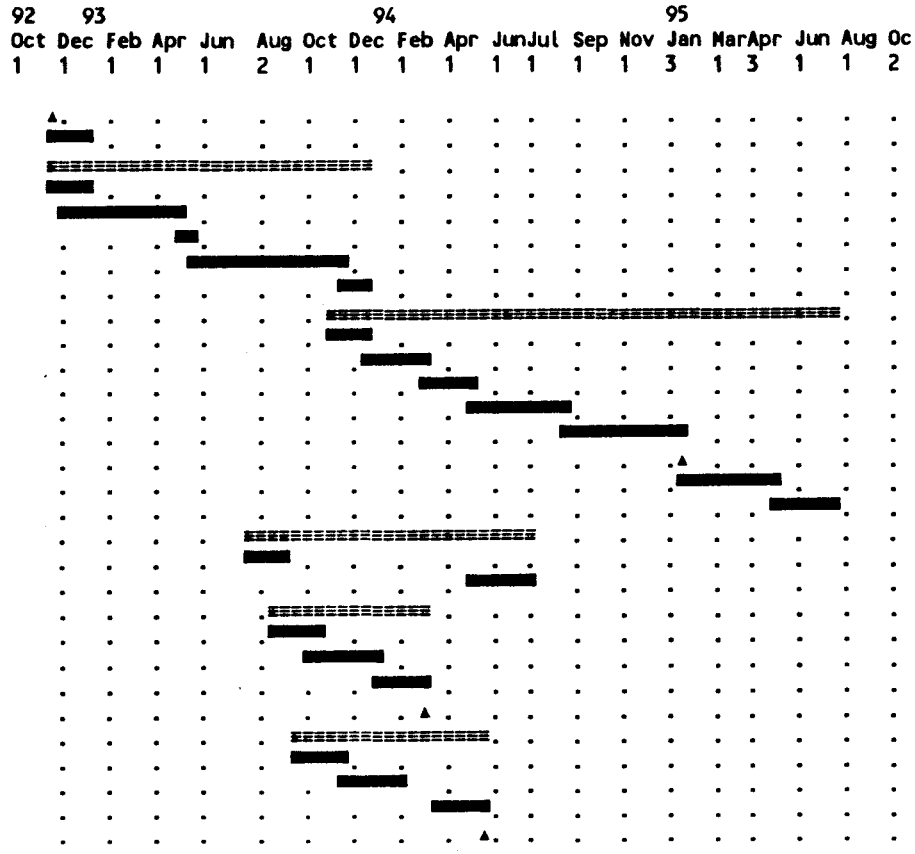


Detail Task — Summary Task — Milestone
(Started) — (Started) — Conflict
(Slack) — (Slack) — Resource delay

Scale: 2 weeks per character

Schedule K2 - 1

MODEL SCHEDULE FOR K2 SURFACE CONSTRUCTION

| Task Name | Start Date | Duratn (Mths) | End Date |
|---|---|---|---|
| K2 Surface (phase I) | 15-Nov-92 | 12.5 | 30-Nov-93 |
| K21 - K26 CONTRACT | 15-Nov-92 | 0 | 15-Nov-92 |
| Mobilization | 15-Nov-92 | 0.6 | 1-Dec-92 |
| Site Preparation | 2-Dec-92 | 2 | 31-Jan-93 |
| Foundations | 2-Jan-93 | 4 | 30-Apr-93 |
| Structural Systems | 1-Mar-93 | 4 | 29-Jun-93 |
| Walls & Roof Panels | 1-May-93 | 4 | 29-Aug-93 |
| Mech., Elec., & Furn. Install. | 1-Jul-93 | 5 | 29-Nov-93 |
| Roads & Landscape | 1-Aug-93 | 4 | 30-Nov-93 |
| BENEFICIAL OCCUPANCY | 1-Dec-93 | 0 | 1-Dec-93 |
| K2 Surface (phase II) | 11-Feb-94 | 5.8 | 5-Aug-94 |
| K27 & K28 CONTRACT | 11-Feb-94 | 0 | 11-Feb-94 |
| Mobilization | 11-Feb-94 | 0.5 | 24-Feb-94 |
| Equipment Shaft Headhouse | 25-Feb-94 | 4 | 25-Jun-94 |
| P1 Shaft Headhouse | 6-May-94 | 3 | 5-Aug-94 |
| BENEFICIAL OCCUPANCY | 6-Aug-94 | 0 | 6-Aug-94 |

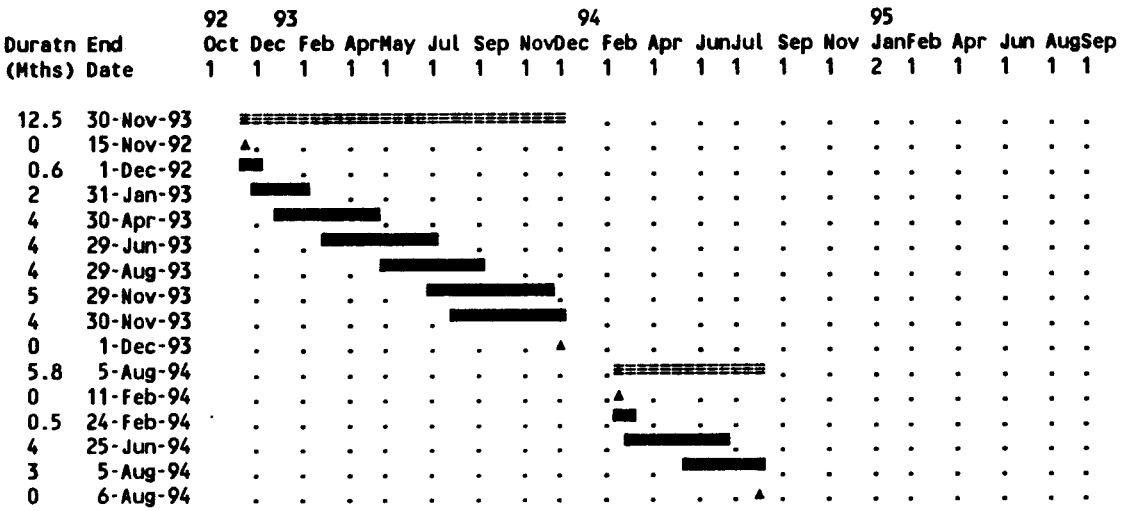


Detail Task — Summary Task — Milestone
(Started) — (Started) — Conflict
(Slack) — (Slack) — Resource delay

Scale: 2 weeks per character

Schedule K2 - 2

MODEL SCHEDULE FOR K2 DETECTOR (Non-Magetic)

| Task Name | Start Date | Duratn (Mths) | End Date |
|---|---|---|---|
| BUILDINGS | 1-Dec-93 | 17 | 1-May-95 |
| Buildings K21 - K26 Ready | 1-Dec-93 | 0 | 1-Dec-93 |
| Experimental Hall Complete | 2-May-95 | 0 | 2-May-95 |
| FUND ENG. DESIGN & SPECIF. R&D | 1-Oct-90 | 0 | 1-Oct-90 |
| STEEL | 1-Oct-90 | 79.1 | 1-May-97 |
| Steel Design | 1-Oct-90 | 12 | 30-Sep-91 |
| Coils | 1-Oct-91 | 38 | 30-Nov-94 |
| Procure Copper Coil | 1-Oct-91 | 12 | 30-Sep-92 |
| Form and Insulate Coils | 1-Dec-93 | 12 | 30-Nov-94 |
| Central Toroids | 1-Oct-91 | 35 | 31-Aug-94 |
| Procure Central Toroids | 1-Oct-91 | 6 | 31-Mar-92 |
| Fabricate Steel Subassembly | 1-Dec-93 | 9 | 31-Aug-94 |
| Catchers | 1-Oct-91 | 53.1 | 2-Mar-96 |
| Procure Catcher Steel | 1-Oct-91 | 12 | 30-Sep-92 |
| Fabricate Catcher Subassemb | 1-Sep-94 | 18 | 2-Mar-96 |
| End Toroids | 1-Oct-91 | 47 | 31-Aug-95 |
| Procure End Toroids | 1-Oct-91 | 12 | 30-Sep-92 |
| Fabricate E Toroid Subassem | 1-Sep-94 | 12 | 31-Aug-95 |
| Assembly | 2-May-95 | 24 | 1-May-97 |
| Assemble Central Toroid | 2-May-95 | 12 | 30-Apr-96 |
| Assemble End Toroids | 1-May-96 | 12 | 1-May-97 |
| Assemble Catchers | 1-May-96 | 9 | 31-Jan-97 |
| Steel Work Complete | 2-May-97 | 0 | 2-May-97 |
| MUON CHAMBER | 1-Oct-90 | 91.1 | 1-May-98 |
| Design Muon Chambers | 1-Oct-90 | 12 | 30-Sep-91 |
| Prototype & Test Chambers | 1-Oct-91 | 6 | 31-Mar-92 |
| Produce Muon Chambers | 1-Dec-93 | 24 | 30-Nov-95 |
| Install Muon Chambers | 2-May-97 | 12 | 1-May-98 |
| Install Catcher Chambers | 1-Feb-97 | 9 | 31-Oct-97 |
| MUON TRIGGER | 1-Oct-90 | 94.1 | 1-Aug-98 |
| Design Muon Trigger | 1-Oct-90 | 6 | 31-Mar-91 |
| Procure PMT's & Scint Counters | 1-Apr-91 | 18 | 29-Sep-92 |
| Fabricate Muon Counters | 1-Dec-93 | 6 | 2-Jun-94 |
| Install Trigger Counter | 2-Aug-97 | 12 | 1-Aug-98 |
| CALORIMETER | 1-Oct-90 | 82 | 31-Jul-97 |
| Calorimeter Design | 1-Oct-90 | 6 | 31-Mar-91 |
| Calorimeter Vessel | 1-Apr-91 | 54 | 30-Sep-95 |
| Vessel Designs | 1-Apr-91 | 9 | 31-Dec-91 |
| Vessel Prototype | 2-Jan-92 | 12 | 31-Dec-92 |
| Procure Vessels | 1-Apr-94 | 18 | 30-Sep-95 |
| Calorimeter Module | 1-Apr-91 | 60 | 31-Mar-96 |
| Module R&D | 1-Apr-91 | 18 | 30-Sep-92 |
| Module Prototype | 1-Oct-92 | 12 | 30-Sep-93 |
| System Tests | 1-Oct-93 | 6 | 31-Mar-94 |
| Module Fabrication | 1-Apr-94 | 24 | 31-Mar-96 |
| Install Modules in Vessels | 1-Apr-96 | 6 | 30-Sep-96 |

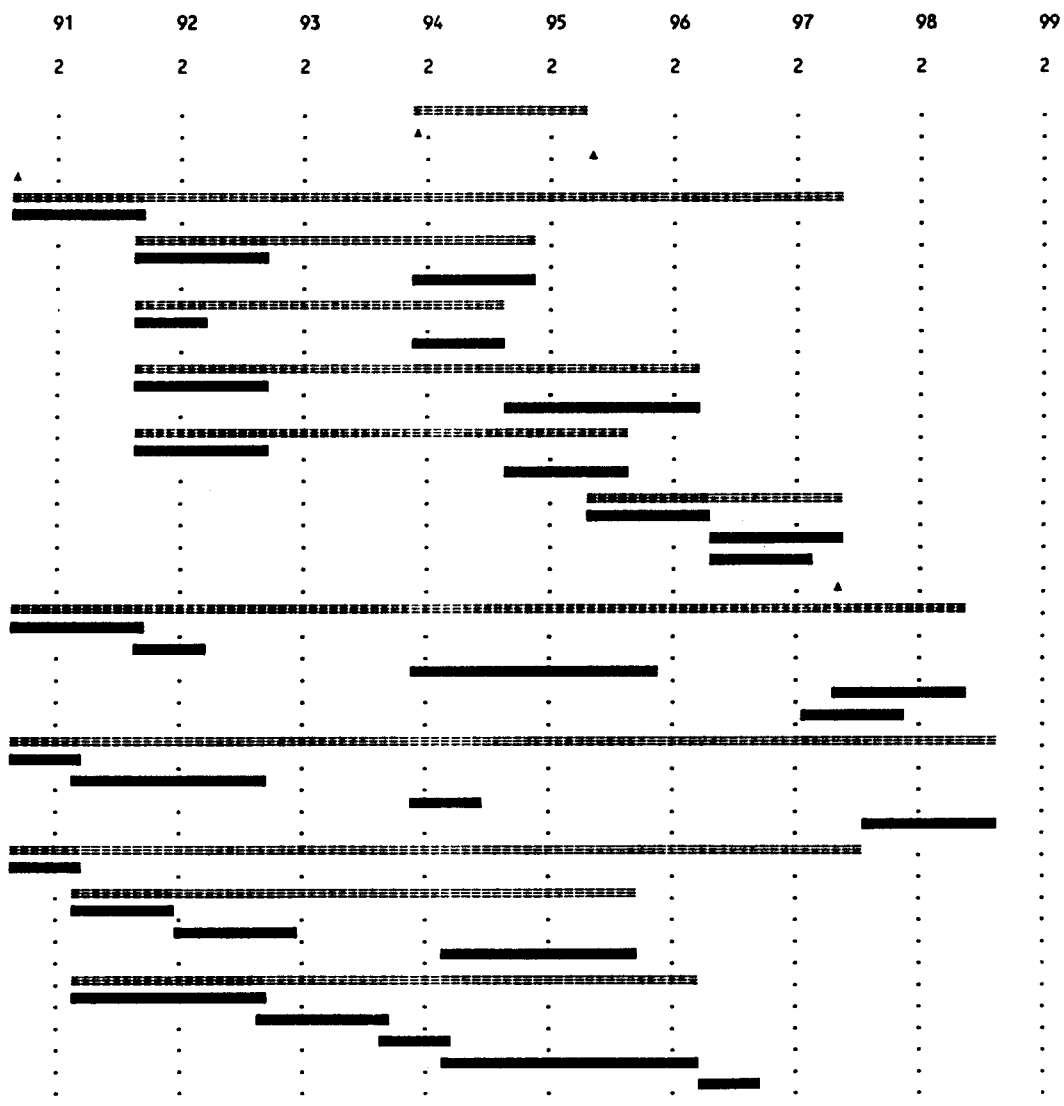


Schedule K2 - 3, page 1 of 2

| | | | |
|---|---|---|---|
| Install Calorimeter & Cable | 1-Feb-97 | 6 | 31-Jul-97 |
| CENTRAL TRACKER | 1-Oct-90 | 82.1 | 1-Aug-97 |
| Central Tracker R&D | 1-Oct-90 | 18 | 31-Mar-92 |
| Tracker Prototype & Tests | 1-Apr-92 | 18 | 30-Sep-93 |
| Central Tracker Fabrication | 1-Dec-93 | 24 | 30-Nov-95 |
| Test & Calibrate | 1-Dec-95 | 6 | 1-Jun-96 |
| Install Tracker & Cables | 1-May-97 | 3 | 1-Aug-97 |
| DETECTOR OPERATIONAL | 2-Aug-98 | 0 | 2-Aug-98 |

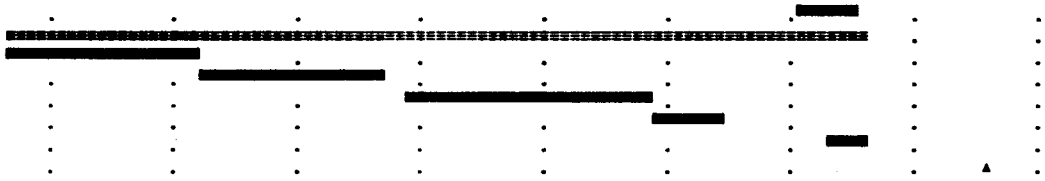

Detail Task — Summary Task — Milestone
(Started) — (Started) — Conflict
(Slack) — (Slack) — Resource delay

Scale: 1 month per character

**Schedule K2 - 3, page 2 of 2**

SUMMARY OF MODEL SCHEDULE OF K2 DEVELOPMENT

| Task Name | Start Date | Duratn (Mths) | End Date |
|---|---|---|---|
| + Near Cluster Land Acquisition | 1-Apr-89 | 15.3 | 9-Jul-90 |
| + A-E/CM Selection | 15-Jan-89 | 8.6 | 1-Oct-89 |
| Near Cluster Infrastructure | 2-Jan-90 | 38.7 | 24-Mar-93 |
| Electrical (Title 1-3) | 2-Jan-90 | 14.4 | 15-Mar-91 |
| Water (Title 1-3) | 1-Apr-90 | 9.5 | 15-Jan-91 |
| Communications (Title 1-3) | 1-Jun-90 | 7.2 | 6-Jan-91 |
| Roads (Title 1-3) | 15-Aug-91 | 19.3 | 24-Mar-93 |
| Auxiliary Systems (Title 1-3) | 15-Mar-92 | 5 | 15-Aug-92 |
| Phys Rsrch Div Detector Activ. | 1-Jun-89 | 35.5 | 15-May-92 |
| + Preliminary detector R&D | 1-Jun-89 | 28 | 1-Oct-91 |
| Approval process | 15-May-90 | 24.1 | 15-May-92 |
| First letter of intent | 15-May-90 | 0 | 15-May-90 |
| PAC Meeting | 1-Jul-90 | 1 | 1-Aug-90 |
| Proposal for experiments | 15-May-91 | 0 | 15-May-91 |
| PAC Meeting | 1-Jul-91 | 1 | 1-Aug-91 |
| Stage I approval | 1-Oct-91 | 0 | 1-Oct-91 |
| DETECTOR DESIGN REPORT | 15-May-91 | 12.1 | 15-May-92 |
| K2 IR Construction | 15-May-91 | 49.9 | 13-Jul-95 |
| Preliminary design studies | 15-May-91 | 4.5 | 30-Sep-91 |
| Conceptual Design | 1-Oct-91 | 2.5 | 14-Dec-91 |
| Title I | 15-Dec-91 | 3 | 14-Mar-92 |
| Title II | 15-Mar-92 | 6 | 14-Sep-92 |
| Contracts bid | 15-Sep-92 | 2 | 14-Nov-92 |
| CONTRACTS AWARDED | 15-Nov-92 | 0 | 15-Nov-92 |
| + K2 Surface (phase I) | 15-Nov-92 | 12.5 | 30-Nov-93 |
| Phase I Beneficial Occupancy | 1-Dec-93 | 0 | 1-Dec-93 |
| + K2 Hall Construction | 16-Nov-92 | 31.9 | 13-Jul-95 |
| Hall Beneficial Occupancy | 3-May-95 | 0 | 3-May-95 |
| + K2 Surface (phase II) | 11-Feb-94 | 5.8 | 5-Aug-94 |
| Phase II Beneficial Occupancy | 6-Aug-94 | 0 | 6-Aug-94 |
| K2 DETECTOR (Non-Magnetic D) | 1-Oct-90 | 94.1 | 2-Aug-98 |
| FUND ENG. DESIGN & SPECIF. R&D | 1-Oct-90 | 0 | 1-Oct-90 |
| + STEEL | 1-Oct-90 | 79.1 | 2-May-97 |
| + MUON CHAMBER | 1-Oct-90 | 91.1 | 2-May-98 |
| + MUON TRIGGER | 1-Oct-90 | 94.1 | 2-Aug-98 |
| CALORIMETER | 1-Oct-90 | 82 | 31-Jul-97 |
| Calorimeter Design | 1-Oct-90 | 6 | 31-Mar-91 |
| + Calorimeter Vessel | 1-Apr-91 | 54 | 30-Sep-95 |
| + Calorimeter Module | 1-Apr-91 | 60 | 31-Mar-96 |
| Install Modules in Vessels | 1-Apr-96 | 6 | 30-Sep-96 |
| Install Calorimeter & Cable | 1-Feb-97 | 6 | 31-Jul-97 |
| + CENTRAL TRACKER | 1-Oct-90 | 82.1 | 1-Aug-97 |
| DETECTOR OPERATIONAL | 3-Aug-98 | 0 | 3-Aug-98 |

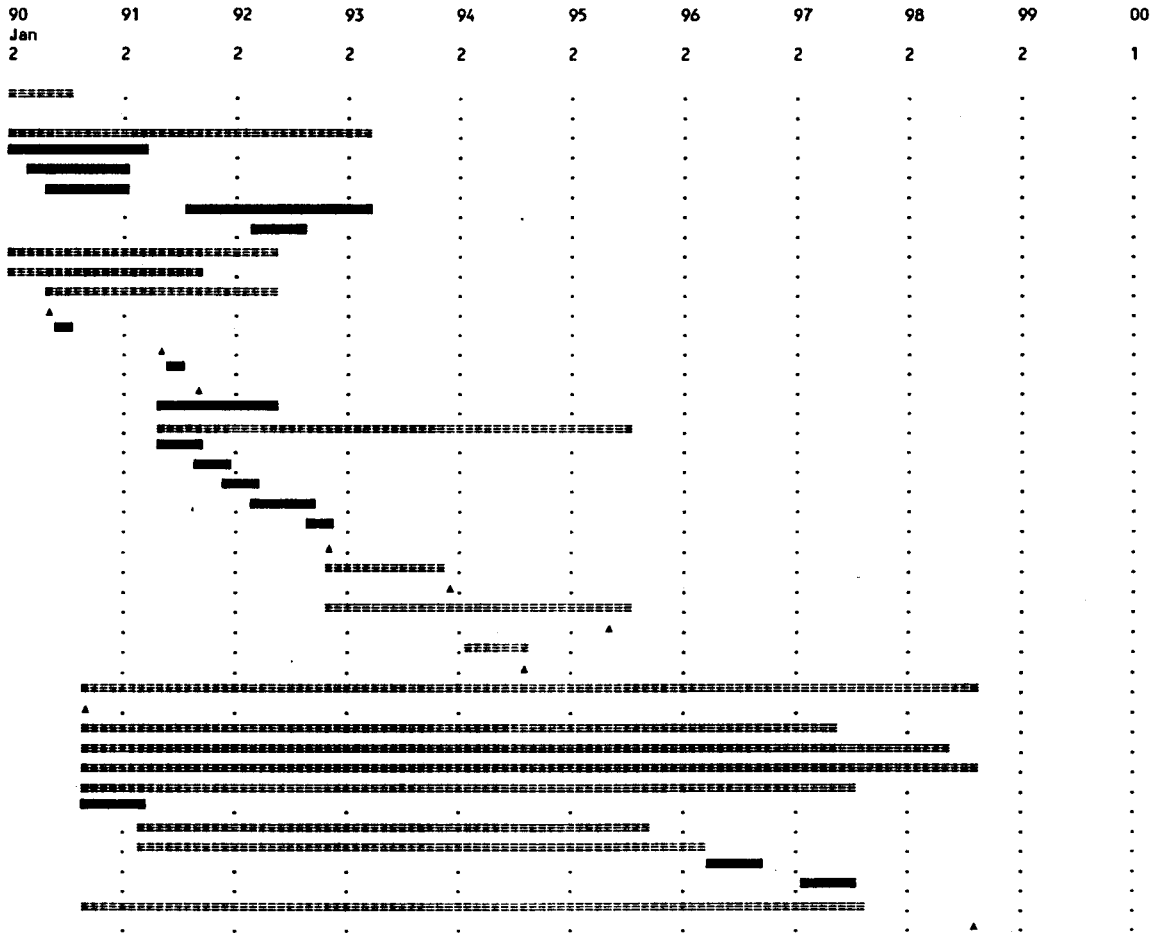


**Schedule K2 - 4**

CRITICAL PATH FOR NMD w/o considering building availablity

Select filter : Critical Path

| Task Name | Start Date | Duratn (Mths) | End Date |
|---|---|---|---|
| BUILDINGS | 2-Jan-90 | 0 | 2-Jan-90 |
| Buildings K21 - K26 Ready | 2-Jan-90 | 0 | 2-Jan-90 |
| Experimental Hall Complete | 2-Jan-90 | 0 | 2-Jan-90 |
| FUND ENG. DESIGN & SPECIF. R&D | 1-Oct-90 | 0 | 1-Oct-90 |
| CALORIMETER | 1-Oct-90 | 78 | 31-Mar-97 |
| Calorimeter Design | 1-Oct-90 | 6 | 31-Mar-91 |
| Calorimeter Module | 1-Apr-91 | 60 | 31-Mar-96 |
| Module R&D | 1-Apr-91 | 18 | 30-Sep-92 |
| Module Prototype | 1-Oct-92 | 12 | 30-Sep-93 |
| System Tests | 1-Oct-93 | 6 | 31-Mar-94 |
| Module Fabrication | 1-Apr-94 | 24 | 31-Mar-96 |
| Install Modules in Vessels | 1-Apr-96 | 6 | 29-Sep-96 |
| Install Calorimeter & Cable | 30-Sep-96 | 6 | 31-Mar-97 |
| DETECTOR OPERATIONAL | 1-Apr-97 | 0 | 1-Apr-97 |

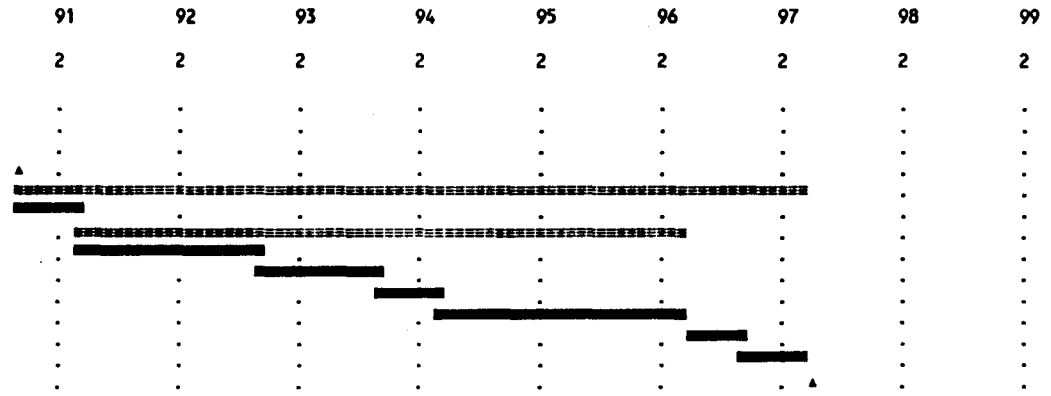


Detail Task — Summary Task — Milestone
(Started) — (Started) — Conflict
(Slack) — (Slack) — Resource delay

Scale: 1 month per character

**Schedule K2 - 5**

CRITICAL PATH FOR NMD considering building availablity

Select filter : Critical Path

| Task Name | Start Date | Duratn (Mths) | End Date |
|---|---|---|---|
| BUILDINGS | 1-Dec-93 | 17 | 1-May-95 |
| Buildings K21 - K26 Ready | 1-Dec-93 | 0 | 1-Dec-93 |
| Experimental Hall Complete | 2-May-95 | 0 | 2-May-95 |
| FUND ENG. DESIGN & SPECIF. R&D | 1-Oct-90 | 0 | 1-Oct-90 |
| STEEL | 1-Oct-90 | 79.1 | 1-May-97 |
| Assembly | 2-May-95 | 24 | 1-May-97 |
| Assemble Central Toroid | 2-May-95 | 12 | 30-Apr-96 |
| Assemble End Toroids | 1-May-96 | 12 | 1-May-97 |
| MUON CHAMBER | 1-Oct-90 | 91.1 | 1-May-98 |
| Install Muon Chambers | 2-May-97 | 12 | 1-May-98 |
| MUON TRIGGER | 1-Oct-90 | 94.1 | 1-Aug-98 |
| Install Trigger Counter | 2-Aug-97 | 12 | 1-Aug-98 |
| DETECTOR OPERATIONAL | 2-Aug-98 | 0 | 2-Aug-98 |

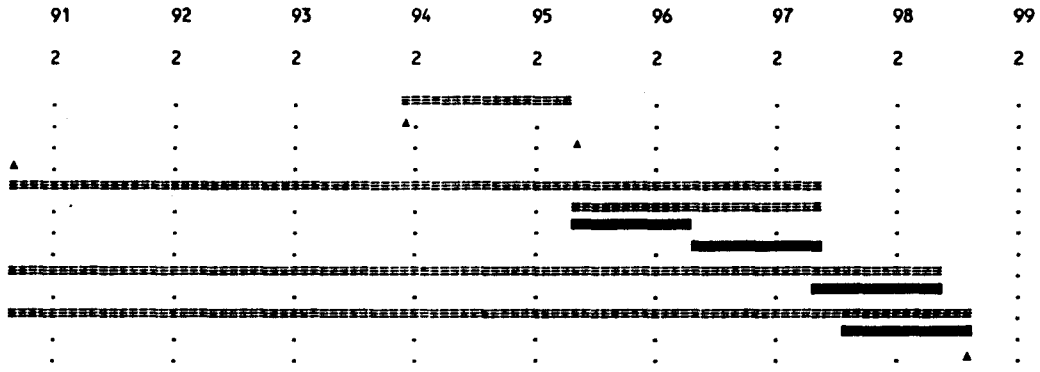


Detail Task — Summary Task — Milestone
(Started) — (Started) — Conflict
(Slack) — (Slack) — Resource delay

Scale: 1 month per character

Schedule K2 - 6

MODEL SCHEDULE FOR K5 HALL CONSTRUCTION (OPEN CUT)

| Task Name | Start Date | Duratn (Days) | End Date |
|---|---|---|---|
| Award Contract | 1-Dec-93 | 0 | 1-Dec-93 |
| Site Preparations | 1-Dec-93 | 30 | 13-Jan-94 |
| Open Cut Excavations | 1-Dec-93 | 300 | 7-Feb-95 |
| Topsoil Removal/Drainage | 1-Dec-93 | 40 | 27-Jan-94 |
| Ramp & Pit Excavation | 22-Dec-93 | 125 | 20-Jun-94 |
| Mucking Reorganization | 21-Jun-94 | 10 | 5-Jul-94 |
| Hall Exc. -Beam & Shaft Tunnel | 6-Jul-94 | 150 | 7-Feb-95 |
| Pillar Rockbolting | 15-Sep-94 | 40 | 9-Nov-94 |
| Hall Structure | 25-Jan-95 | 360 | 26-Jun-96 |
| Floor Mud-Mat & Prep. | 25-Jan-95 | 30 | 8-Mar-95 |
| Final Floor | 9-Mar-95 | 40 | 3-May-95 |
| Sidewalls & Crane Support | 4-May-95 | 80 | 25-Aug-95 |
| Roof | 28-Aug-95 | 100 | 22-Jan-96 |
| Hall Structure Complete | 23-Jan-96 | 0 | 23-Jan-96 |
| Pit & Ramp Backfill | 23-Jan-96 | 60 | 16-Apr-96 |
| Surface Rehabilitation | 17-Apr-96 | 50 | 26-Jun-96 |
| Beam Tunnel Link-ups | 15-Sep-94 | 210 | 14-Jul-95 |
| Excavation | 15-Sep-94 | 30 | 26-Oct-94 |
| Concrete | 4-May-95 | 50 | 14-Jul-95 |
| E Shaft Structure | 13-Oct-94 | 125 | 12-Apr-95 |
| Surface Operations | 13-Oct-94 | 35 | 2-Dec-94 |
| Shaft Sink | 28-Nov-94 | 55 | 14-Feb-95 |
| Concrete | 15-Feb-95 | 40 | 12-Apr-95 |
| E Shaft Structure Compl. | 13-Apr-95 | 0 | 13-Apr-95 |
| P1 Shaft Structure | 10-Nov-94 | 155 | 22-Jun-95 |
| Surface Operations | 10-Nov-94 | 35 | 3-Jan-95 |
| Shaft Sink | 4-Jan-95 | 50 | 15-Mar-95 |
| Concrete | 27-Apr-95 | 40 | 22-Jun-95 |
| P1 Shaft Structure Compl. | 23-Jun-95 | 0 | 23-Jun-95 |

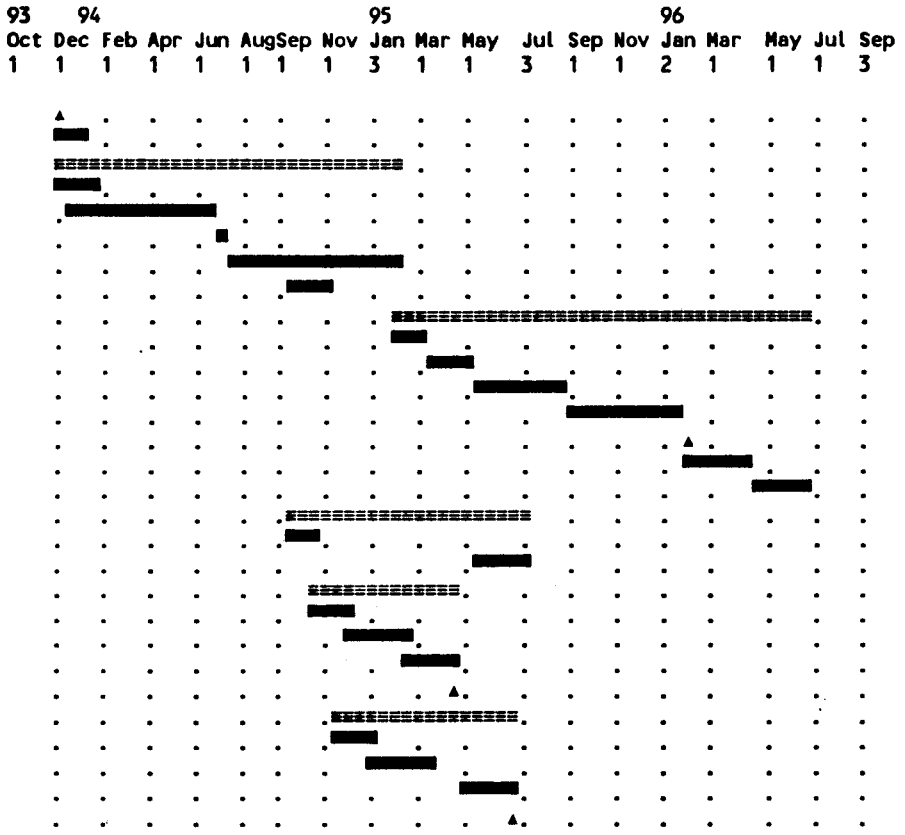


Detail Task — Summary Task — Milestone
(Started) — (Started) — Conflict
(Slack) — (Slack) — Resource delay

Scale: 2 weeks per character

Schedule K5 - 1

MODEL SCHEDULE FOR K5 SURFACE CONSTRUCTION

| Task Name | Start Date | Duratn (Mths) | End Date |
|---|---|---|---|
| K5 Surface (phase I) | 1-Dec-93 | 12.5 | 14-Dec-94 |
| K51 - K53 CONTRACT | 1-Dec-93 | 0 | 1-Dec-93 |
| Mobilization | 1-Dec-93 | 0.5 | 15-Dec-93 |
| Site Preparation | 16-Dec-93 | 2 | 14-Feb-94 |
| Foundations | 16-Jan-94 | 4 | 14-May-94 |
| Structural Systems | 15-Mar-94 | 4 | 14-Jul-94 |
| Walls & Roof Panels | 15-May-94 | 4 | 13-Sep-94 |
| Mech., Elec., & Furn. Install. | 16-Jul-94 | 5 | 13-Dec-94 |
| Roads & Landscape | 15-Aug-94 | 4 | 14-Dec-94 |
| BENEFICIAL OCCUPANCY | 15-Dec-94 | 0 | 15-Dec-94 |
| K5 Surface (phase II) | 30-Mar-95 | 5.8 | 22-Sep-95 |
| K54 & K55 CONTRACT | 30-Mar-95 | 0 | 30-Mar-95 |
| Mobilization | 30-Mar-95 | 0.5 | 12-Apr-95 |
| Equipment Shaft Headhouse | 13-Apr-95 | 4 | 12-Aug-95 |
| P1 Shaft Headhouse | 23-Jun-95 | 3 | 22-Sep-95 |
| BENEFICIAL OCCUPANCY | 23-Sep-95 | 0 | 23-Sep-95 |

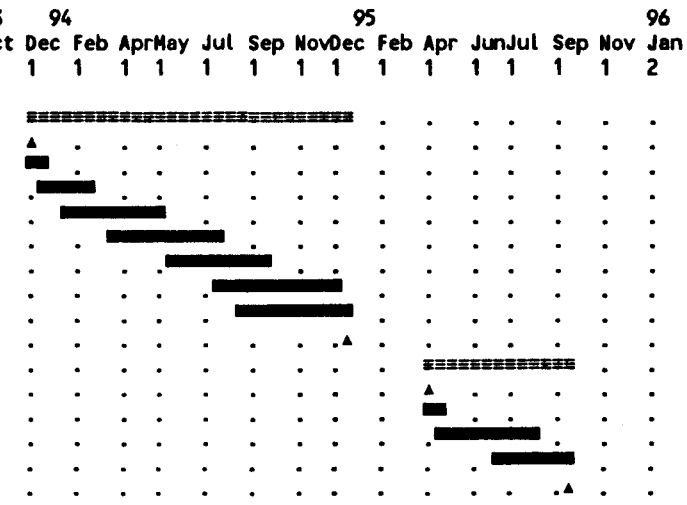


Detail Task — Summary Task — Milestone
(Started) — (Started) — Conflict
(Slack) — (Slack) — Resource delay

Scale: 2 weeks per character

Schedule K5 - 2

MODEL SCHEDULE FOR K5 DETECTOR (Bottom Collider)

| Task Name | Start Date | Duratn (Mths) | End Date |
|---|---|---|---|
| BUILDINGS | 15-Dec-94 | 13.2 | 22-Jan-96 |
| Buildings K51 - K53 Ready | 15-Dec-94 | 0 | 15-Dec-94 |
| Experimental Hall Complete | 23-Jan-96 | 0 | 23-Jan-96 |
| FUND ENG. DESIGN & SPECIF. R&D | 1-Oct-90 | 0 | 1-Oct-90 |
| MAGNET ASSEMBLY (1 & 2) | 15-Sep-94 | 41.3 | 22-Feb-98 |
| Magnet Iron 1&2 | 15-Dec-94 | 31.2 | 22-Jul-97 |
| Procure & Fabricate | 15-Dec-94 | 14 | 14-Feb-96 |
| Assemble & Install | 23-Jan-96 | 18 | 22-Jul-97 |
| Magnet Coils 1&2 | 15-Sep-94 | 37.3 | 22-Oct-97 |
| Design Coils | 15-Sep-94 | 3 | 14-Dec-94 |
| Procure & Fabricate | 15-Dec-94 | 24 | 14-Dec-96 |
| Install Bottom Coil | 22-Oct-96 | 3 | 21-Jan-97 |
| Install Top Coil | 23-Jul-97 | 3 | 22-Oct-97 |
| Magnet Cooling and Power 1&2 | 15-Dec-96 | 14.3 | 22-Feb-98 |
| Procure & Fabricate | 15-Dec-96 | 4 | 14-Apr-97 |
| Install | 23-Oct-97 | 4 | 22-Feb-98 |
| INSTALL MAGNET 2 | 23-Feb-98 | 2 | 22-Apr-98 |
| MUON CHAMBERS | 15-Dec-94 | 36.3 | 22-Dec-97 |
| Muon Steel | 15-Dec-94 | 31.2 | 22-Jul-97 |
| Fabricate | 15-Dec-94 | 18 | 14-Jun-96 |
| Install | 23-Jan-96 | 18 | 22-Jul-97 |
| Muon Counters around Magnets | 15-Dec-94 | 36.3 | 22-Dec-97 |
| Fabricate | 15-Dec-94 | 6 | 14-Jun-95 |
| Install | 23-Oct-97 | 2 | 22-Dec-97 |
| Muon Chambers & Counters | 15-Dec-94 | 34.3 | 22-Oct-97 |
| Fabricate | 15-Dec-94 | 6 | 14-Jun-95 |
| Install | 23-Jul-97 | 3 | 22-Oct-97 |
| EM CALORIMETRY | 1-Oct-90 | 94.8 | 22-Aug-98 |
| Design | 1-Oct-90 | 18 | 30-Mar-92 |
| Prototype | 31-Mar-92 | 24 | 31-Mar-94 |
| Fabricate & Assemble | 15-Dec-94 | 24 | 14-Dec-96 |
| Install Inner | 23-Apr-98 | 4 | 22-Aug-98 |
| Install Outer | 23-Apr-98 | 4 | 22-Aug-98 |
| TRANSITION RADIATION DETECTORS | 1-Oct-90 | 98.8 | 21-Dec-98 |
| Design | 1-Oct-90 | 18 | 30-Mar-92 |
| Prototype | 31-Mar-92 | 24 | 31-Mar-94 |
| Fabricate & Assemble | 15-Dec-94 | 24 | 14-Dec-96 |
| Install Inner | 23-Aug-98 | 4 | 21-Dec-98 |
| Install Outer | 23-Aug-98 | 4 | 21-Dec-98 |
| RING-IMAGING CHERENKOV DETECTR | 1-Oct-90 | 102.8 | 22-Apr-99 |
| Design | 1-Oct-90 | 18 | 30-Mar-92 |
| Prototype | 31-Mar-92 | 36 | 1-Apr-95 |
| Fabricate & Assemble | 2-Apr-95 | 24 | 31-Mar-97 |
| Install Inner | 22-Dec-98 | 4 | 22-Apr-99 |
| Install Outer | 22-Dec-98 | 4 | 22-Apr-99 |
| TRACKING - STRAWS | 1-Oct-90 | 104.7 | 21-Jun-99 |

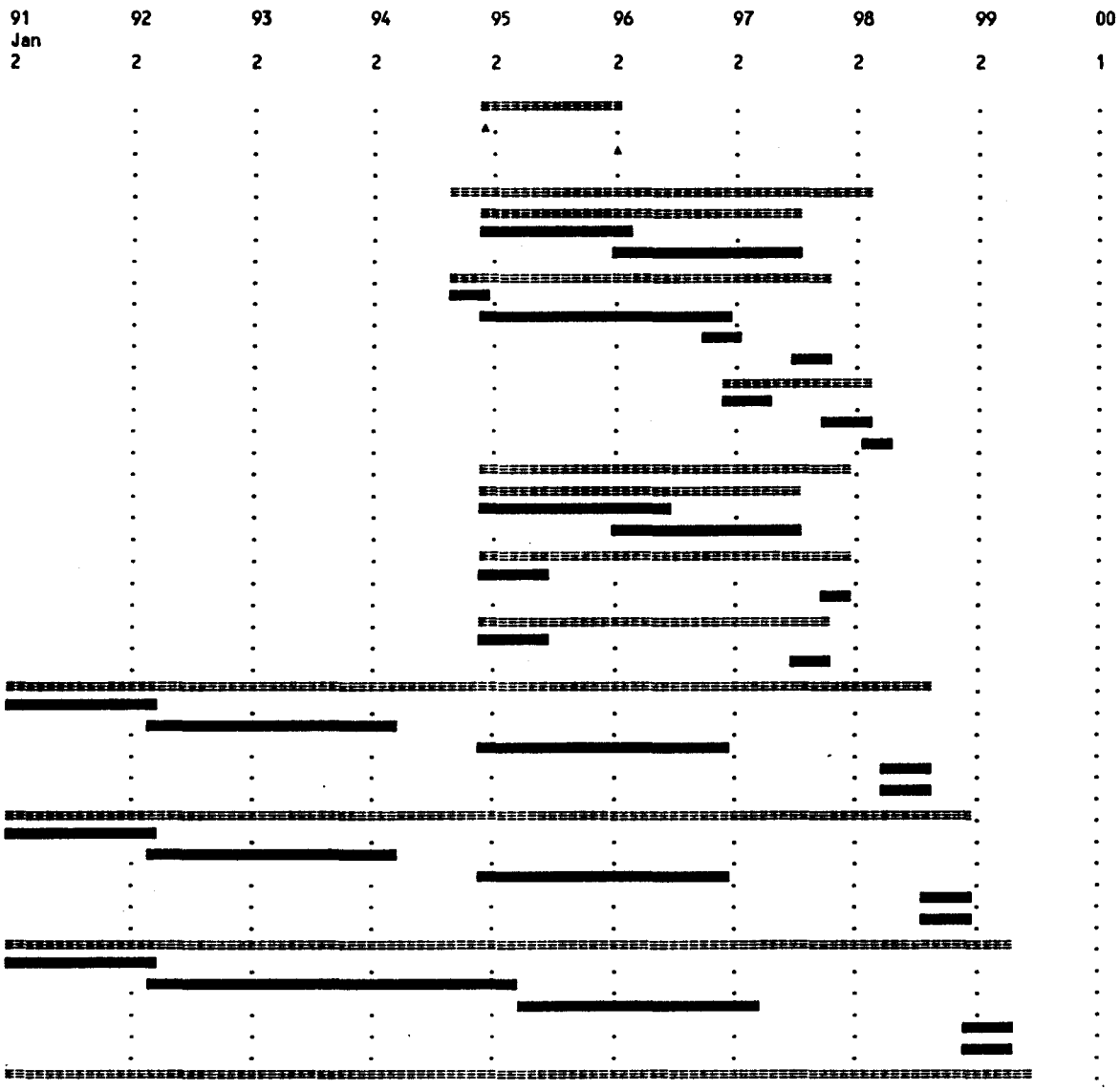


Schedule K5 - 3, page 1 of 2

| | | | |
|---|---|---|---|
| Design | 1-Oct-90 | 18 | 30-Mar-92 |
| Prototype | 31-Mar-92 | 24 | 31-Mar-94 |
| Fabricate & Assemble | 15-Dec-94 | 36 | 14-Dec-97 |
| Install Inner | 23-Apr-99 | 2 | 21-Jun-99 |
| Install Outer | 23-Apr-99 | 2 | 21-Jun-99 |
| VERTEX DETECTOR | 1-Oct-90 | 105.7 | 21-Jul-99 |
| Design | 1-Oct-90 | 30 | 31-Mar-93 |
| Prototype | 1-Apr-93 | 24 | 1-Apr-95 |
| Fabricate | 2-Apr-95 | 12 | 31-Mar-96 |
| Install | 22-Jun-99 | 1 | 21-Jul-99 |
| DATA ACQUISITION SYSTEM | 1-Oct-91 | 93.7 | 22-Jul-99 |
| Design | 1-Oct-91 | 24 | 30-Sep-93 |
| Prototype | 1-Oct-93 | 24 | 30-Sep-95 |
| Fabricate & Install | 1-Oct-95 | 3 | 30-Dec-95 |
| Optical Readout Cables | 1-Aug-93 | 71.7 | 22-Jul-99 |
| Design | 1-Aug-93 | 2 | 30-Sep-93 |
| Prototype | 1-Apr-95 | 6 | 30-Sep-95 |
| Fabricate | 1-Oct-95 | 6 | 31-Mar-96 |
| Install Inner | 23-Aug-98 | 11 | 22-Jul-99 |
| Install Outer | 23-Aug-98 | 10 | 22-Jun-99 |
| INSTALL MAGNET 1 | 22-Jul-99 | 2 | 20-Sep-99 |
| DETECTOR OPERATIONAL | 21-Sep-99 | 0 | 21-Sep-99 |

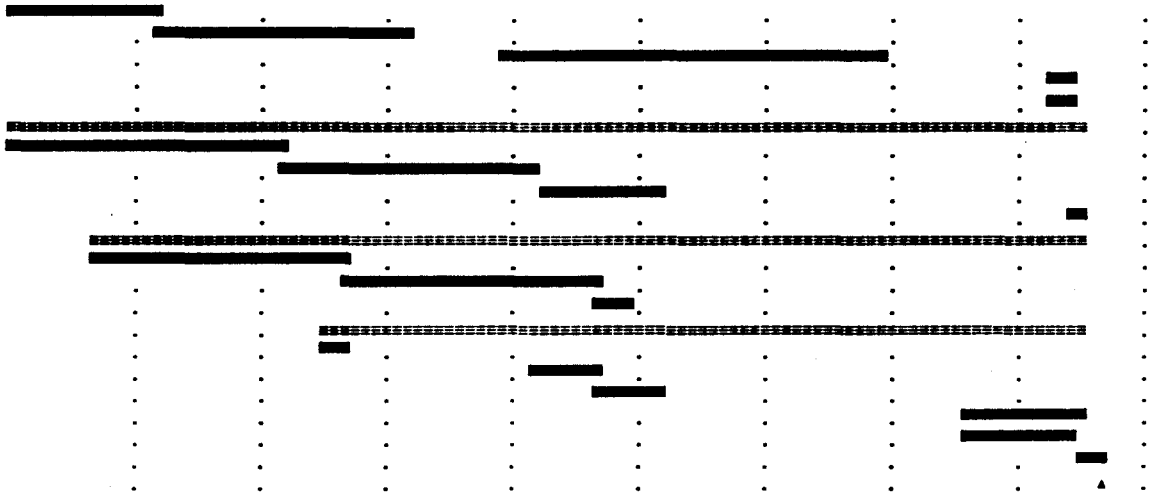

Detail Task — Summary Task — Milestone
(Started) — (Started) — Conflict
(Slack) — (Slack) — Resource delay

Scale: 1 month per character

Schedule K5 - 3, page 2 of 2

SUMMARY OF MODEL SCHEDULE OF K5 DEVELOPMENT

| Task Name | | Start Date | Duratn (Mths) | End Date |
|---|---|---|---|---|
| + Cluster Land Acquisition | | 1-Apr-89 | 19.3 | 9-Nov-90 |
| + A-E/CM Selection | | 15-Jan-89 | 8.6 | 1-Oct-89 |
| Far Cluster Infrastructure | | 1-Dec-90 | 27.7 | 24-Mar-93 |
| Electrical | (Title 1-3) | 1-Dec-90 | 14.5 | 15-Feb-92 |
| Water | (Title 1-3) | 20-Jul-91 | 9.5 | 2-May-92 |
| Communications | (Title 1-3) | 20-Apr-92 | 7.2 | 25-Nov-92 |
| Roads | (Title 1-3) | 15-Aug-91 | 19.3 | 24-Mar-93 |
| Auxiliary Systems | (Title 1-3) | 15-Mar-92 | 5 | 15-Aug-92 |
| Phys Rsrch Div Detector Activ. | | 1-Jun-89 | 35.5 | 15-May-92 |
| + Preliminary detector R&D | | 1-Jun-89 | 28 | 1-Oct-91 |
| Approval process | | 15-May-90 | 24.1 | 15-May-92 |
| First letter of intent | | 15-May-90 | 0 | 15-May-90 |
| PAC Meeting | | 1-Jul-90 | 1 | 1-Aug-90 |
| Proposal for experiments | | 15-May-91 | 0 | 15-May-91 |
| PAC Meeting | | 1-Jul-91 | 1 | 1-Aug-91 |
| Stage I approval | | 1-Oct-91 | 0 | 1-Oct-91 |
| DETECTOR DESIGN REPORT | | 15-May-91 | 12.1 | 15-May-92 |
| K5 IR Construction | | 15-May-91 | 61.4 | 26-Jun-96 |
| Preliminary design studies | | 15-May-91 | 4.5 | 30-Sep-91 |
| Conceptual Design | | 15-Oct-92 | 2.6 | 31-Dec-92 |
| Title I | | 2-Jan-93 | 3 | 31-Mar-93 |
| Title II | | 1-Apr-93 | 6 | 30-Sep-93 |
| Contracts bid | | 1-Oct-93 | 2 | 30-Nov-93 |
| CONTRACTS AWARDED | | 1-Dec-93 | 0 | 1-Dec-93 |
| + K5 Surface (phase I) | | 1-Dec-93 | 12.5 | 14-Dec-94 |
| Phase I Beneficial Occupancy | | 15-Dec-94 | 0 | 15-Dec-94 |
| + K5 Hall Construction | | 1-Dec-93 | 30.9 | 26-Jun-96 |
| Hall Beneficial Occupancy | | 23-Jan-96 | 0 | 23-Jan-96 |
| + K5 Surface (phase II) | | 30-Mar-95 | 5.8 | 22-Sep-95 |
| Phase II Beneficial Occupancy | | 23-Sep-95 | 0 | 23-Sep-95 |
| K5 DETECTOR (Bottom Collider) | | 1-Oct-90 | 107.7 | 20-Sep-99 |
| FUND ENG. DESIGN & SPECIF. R&D | | 1-Oct-90 | 0 | 1-Oct-90 |
| + MAGNET ASSEMBLY (1 & 2) | | 15-Sep-94 | 41.3 | 22-Feb-98 |
| INSTALL MAGNET 2 | | 23-Feb-98 | 2 | 22-Apr-98 |
| + MUON CHAMBERS | | 15-Dec-94 | 36.3 | 22-Dec-97 |
| + EM CALORIMETRY | | 1-Oct-90 | 94.8 | 22-Aug-98 |
| + TRANSITION RADIATION DETECTORS | | 1-Oct-90 | 98.8 | 21-Dec-98 |
| + RING-IMAGING CHERENKOV DETECTR | | 1-Oct-90 | 102.8 | 22-Apr-99 |
| + TRACKING - STRAWS | | 1-Oct-90 | 104.7 | 21-Jun-99 |
| + VERTEX DETECTOR | | 1-Oct-90 | 105.7 | 21-Jul-99 |
| + DATA ACQUISITION SYSTEM | | 1-Oct-91 | 93.7 | 22-Jul-99 |
| INSTALL MAGNET 1 | | 22-Jul-99 | 2 | 20-Sep-99 |
| DETECTOR OPERATIONAL | | 21-Sep-99 | 0 | 21-Sep-99 |

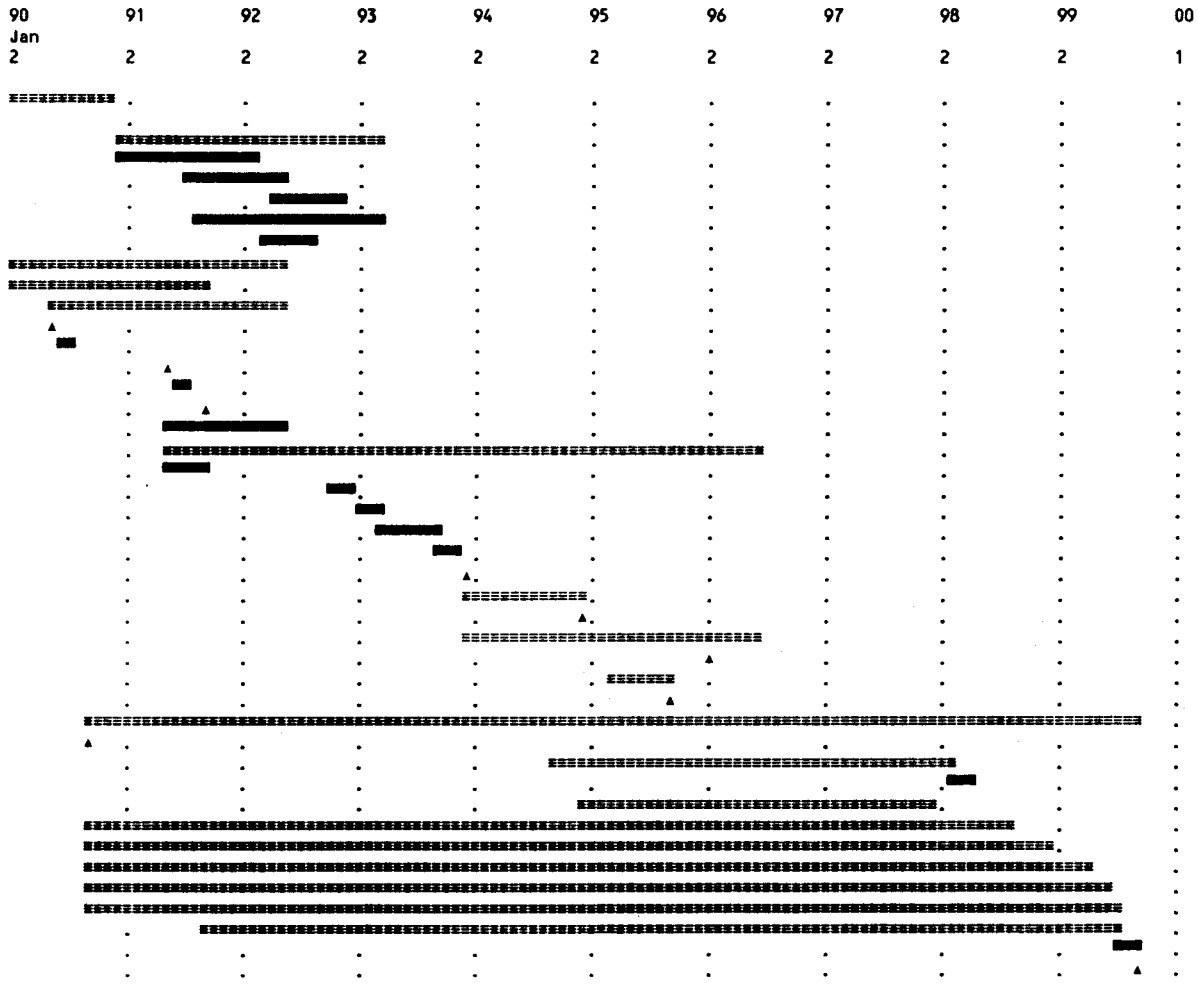


Schedule K5 - 4

CRITICAL PATH FOR BCD w/o considering building availability

Select filter : Critical Path

| Task Name | Start Date | Duratn (Mths) | End Date |
|---|---|---|---|
| BUILDINGS | 2-Jan-90 | 0 | 2-Jan-90 |
| Buildings K51 - K53 Ready | 2-Jan-90 | 0 | 2-Jan-90 |
| Experimental Hall Complete | 2-Jan-90 | 0 | 2-Jan-90 |
| FUND ENG. DESIGN & SPECIF. R&D | 1-Oct-90 | 0 | 1-Oct-90 |
| RING-IMAGING CHERENKOV DETECTR | 1-Oct-90 | 82 | 31-Jul-97 |
| Design | 1-Oct-90 | 18 | 30-Mar-92 |
| Prototype | 31-Mar-92 | 36 | 1-Apr-95 |
| Fabricate & Assemble | 2-Apr-95 | 24 | 31-Mar-97 |
| Install Inner | 1-Apr-97 | 4 | 31-Jul-97 |
| TRACKING - STRAWS | 1-Oct-90 | 84 | 29-Sep-97 |
| Install Inner | 1-Aug-97 | 2 | 29-Sep-97 |
| VERTEX DETECTOR | 1-Oct-90 | 85 | 28-Oct-97 |
| Install | 30-Sep-97 | 1 | 28-Oct-97 |
| INSTALL MAGNET 1 | 29-Oct-97 | 2 | 28-Dec-97 |
| DETECTOR OPERATIONAL | 29-Dec-97 | 0 | 29-Dec-97 |

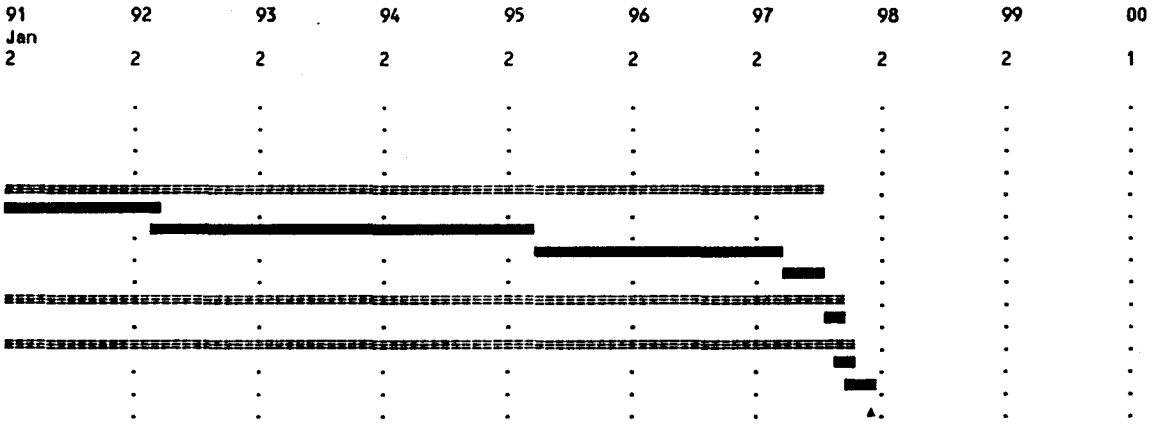


Detail Task — Summary Task — Milestone
(Started) — (Started) — Conflict
(Slack) — (Slack) — Resource delay

Scale: 1 month per character

Schedule K5 - 5

CRITICAL PATH FOR BCD considering building availability

Select filter : Critical Path

| Task Name | Start Date | Duratn (Mths) | End Date |
|---|---|---|---|
| BUILDINGS | 15-Dec-94 | 13.2 | 22-Jan-96 |
| Buildings K51 - K53 Ready | 15-Dec-94 | 0 | 15-Dec-94 |
| Experimental Hall Complete | 23-Jan-96 | 0 | 23-Jan-96 |
| FUND ENG. DESIGN & SPECIF. R&D | 1-Oct-90 | 0 | 1-Oct-90 |
| MAGNET ASSEMBLY (1 & 2) | 15-Sep-94 | 41.3 | 22-Feb-98 |
| Magnet Iron 1&2 | 15-Dec-94 | 31.2 | 22-Jul-97 |
| Assemble & Install | 23-Jan-96 | 18 | 22-Jul-97 |
| Magnet Coils 1&2 | 15-Sep-94 | 37.3 | 22-Oct-97 |
| Install Top Coil | 23-Jul-97 | 3 | 22-Oct-97 |
| Magnet Cooling and Power 1&2 | 15-Dec-96 | 14.3 | 22-Feb-98 |
| Install | 23-Oct-97 | 4 | 22-Feb-98 |
| INSTALL MAGNET 2 | 23-Feb-98 | 2 | 22-Apr-98 |
| EM CALORIMETRY | 1-Oct-90 | 94.8 | 22-Aug-98 |
| Install Inner | 23-Apr-98 | 4 | 22-Aug-98 |
| TRANSITION RADIATION DETECTORS | 1-Oct-90 | 98.8 | 21-Dec-98 |
| Install Inner | 23-Aug-98 | 4 | 21-Dec-98 |
| RING-IMAGING CHERENKOV DETECTR | 1-Oct-90 | 102.8 | 22-Apr-99 |
| Install Inner | 22-Dec-98 | 4 | 22-Apr-99 |
| TRACKING - STRAWS | 1-Oct-90 | 104.7 | 21-Jun-99 |
| Install Inner | 23-Apr-99 | 2 | 21-Jun-99 |
| VERTEX DETECTOR | 1-Oct-90 | 105.7 | 21-Jul-99 |
| Install | 22-Jun-99 | 1 | 21-Jul-99 |
| INSTALL MAGNET 1 | 22-Jul-99 | 2 | 20-Sep-99 |
| DETECTOR OPERATIONAL | 21-Sep-99 | 0 | 21-Sep-99 |

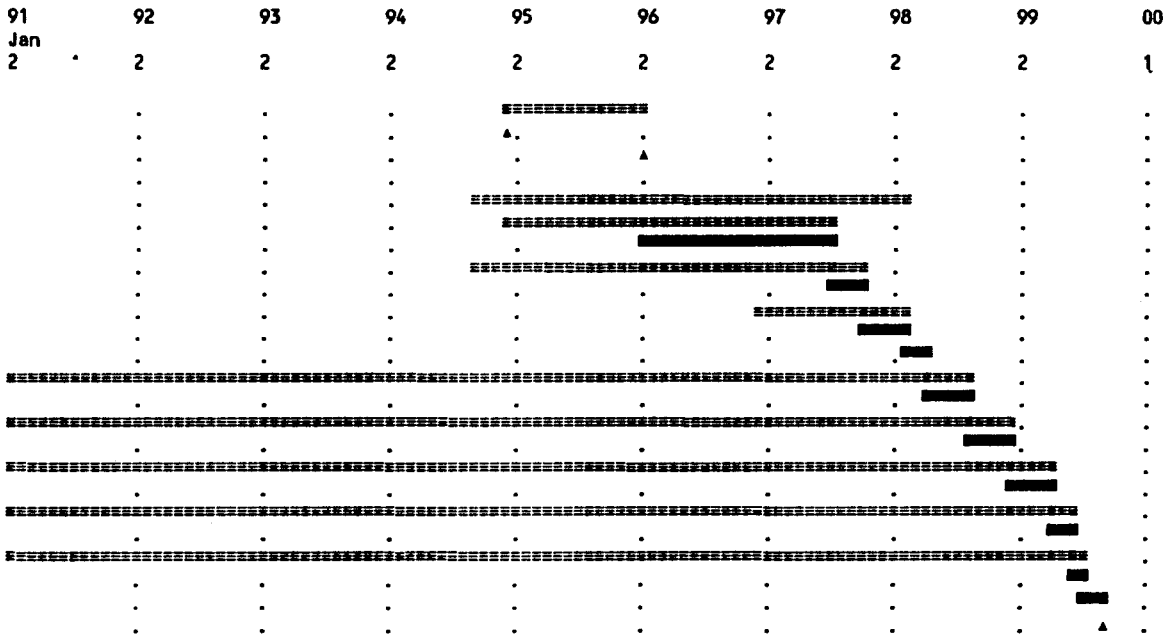


Detail Task (Started) (Slack) — Summary Task (Started) (Slack) — Milestone — Conflict — Resource delay

Scale: 1 month per character

Schedule K5 - 6

MODEL SCHEDULE FOR K6 HALL CONSTRUCTION (OPEN CUT)

| Task Name | Start Date | Duratn (Days) | End Date |
|---|---|---|---|
| Award Contract | 1-Dec-93 | 0 | 1-Dec-93 |
| Site Preparations | 1-Dec-93 | 30 | 13-Jan-94 |
| Open Cut Excavation | 1-Dec-93 | 250 | 23-Nov-94 |
| Topsoil Removal/Drainage | 1-Dec-93 | 30 | 13-Jan-94 |
| Ramp & Pit Excavation | 22-Dec-93 | 100 | 13-May-94 |
| Mucking Reorganization | 16-May-94 | 10 | 27-May-94 |
| Hall Exc. -Beam & Shaft Tunnel | 31-May-94 | 125 | 23-Nov-94 |
| Hall Structure | 10-Nov-94 | 295 | 12-Jan-96 |
| Floor Mud-Mat & Prep. | 10-Nov-94 | 20 | 9-Dec-94 |
| Final Floor | 12-Dec-94 | 30 | 24-Jan-95 |
| Sidewalls & Crane Support | 25-Jan-95 | 60 | 19-Apr-95 |
| Roof | 20-Apr-95 | 60 | 14-Jul-95 |
| Hall Structure Complete | 17-Jul-95 | 0 | 17-Jul-95 |
| Backfill & Construction Shaft | 17-Jul-95 | 75 | 30-Oct-95 |
| Surface Rehabilitation | 31-Oct-95 | 50 | 12-Jan-96 |
| Beam Tunnel Link-ups | 10-Aug-94 | 165 | 5-Apr-95 |
| Excavation | 10-Aug-94 | 30 | 21-Sep-94 |
| Concrete | 25-Jan-95 | 50 | 5-Apr-95 |
| E Shaft Structure | 8-Sep-94 | 125 | 8-Mar-95 |
| Surface Operations | 8-Sep-94 | 35 | 26-Oct-94 |
| Shaft Sink | 20-Oct-94 | 55 | 10-Jan-95 |
| Concrete | 11-Jan-95 | 40 | 8-Mar-95 |
| E Shaft Structure Compl. | 9-Mar-95 | 0 | 9-Mar-95 |
| P1 Shaft Structure | 6-Oct-94 | 155 | 17-May-95 |
| Surface Operations | 6-Oct-94 | 35 | 23-Nov-94 |
| Shaft Sink | 28-Nov-94 | 50 | 7-Feb-95 |
| Concrete | 23-Mar-95 | 40 | 17-May-95 |
| P1 Shaft Structure Compl. | 18-May-95 | 0 | 18-May-95 |

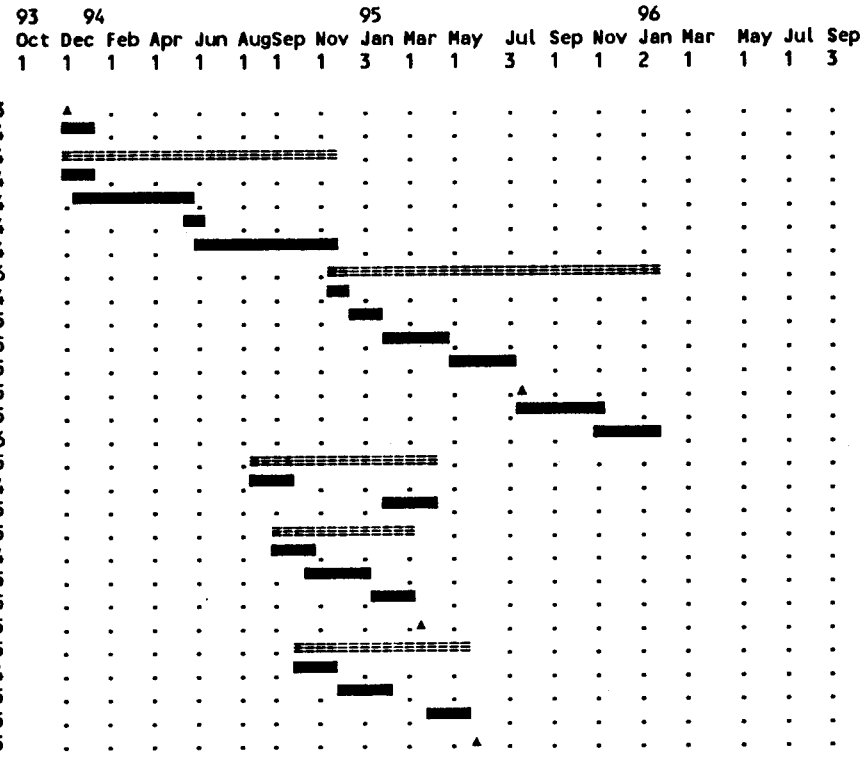


Detail Task — Summary Task — Milestone
(Started) — (Started) — Conflict
(Slack) — (Slack) — Resource delay

Scale: 2 weeks per character

Schedule K6 - 1

MODEL SCHEDULE FOR K6 SURFACE CONSTRUCTION

| Task Name | Start Date | Duratn (Mths) | End Date |
|---|---|---|---|
| K6 Surface (phase I) | 1-Dec-93 | 12.5 | 14-Dec-94 |
| K61 - K66 CONTRACT | 1-Dec-93 | 0 | 1-Dec-93 |
| Mobilization | 1-Dec-93 | 0.5 | 15-Dec-93 |
| Site Preparation | 16-Dec-93 | 2 | 14-Feb-94 |
| Foundations | 16-Jan-94 | 4 | 14-May-94 |
| Structural Systems | 15-Mar-94 | 4 | 14-Jul-94 |
| Walls & Roof Panels | 15-May-94 | 4 | 13-Sep-94 |
| Mech., Elec., & Furn. Install. | 16-Jul-94 | 5 | 13-Dec-94 |
| Roads & Landscape | 15-Aug-94 | 4 | 14-Dec-94 |
| BENEFICIAL OCCUPANCY | 15-Dec-94 | 0 | 15-Dec-94 |
| K6 Surface (phase II) | 23-Feb-95 | 5.8 | 17-Aug-95 |
| K67 & K68 CONTRACT | 23-Feb-95 | 0 | 23-Feb-95 |
| Mobilization | 23-Feb-95 | 0.5 | 8-Mar-95 |
| Equipment Shaft Headhouse | 9-Mar-95 | 4 | 8-Jul-95 |
| P1 Shaft Headhouse | 18-May-95 | 3 | 17-Aug-95 |
| BENEFICIAL OCCUPANCY | 18-Aug-95 | 0 | 18-Aug-95 |

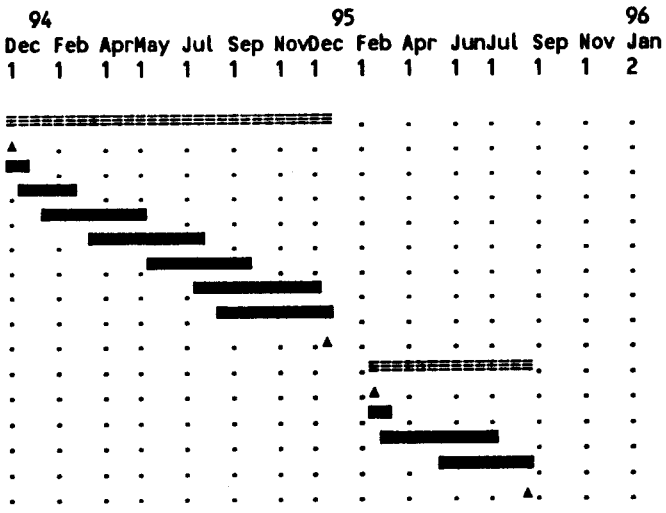


Detail Task — Summary Task — Milestone
(Started) — (Started) — Conflict
(Slack) — (Slack) — Resource delay

Scale: 2 weeks per character

Schedule K6 - 2

MODEL SCHEDULE FOR K6 DETECTOR (Up-graded DO)

| Task Name | Start Date | Duratn (Mths) | End Date |
|---|---|---|---|
| BUILDINGS | 15-Dec-94 | 10.5 | 30-Oct-95 |
| Buildings K61 - K66 Ready | 15-Dec-94 | 0 | 15-Dec-94 |
| Experimental Hall Complete | 31-Oct-95 | 0 | 31-Oct-95 |
| FUND ENG. DESIGN & SPECIF. R&D | 1-Oct-90 | 0 | 1-Oct-90 |
| STEEL | 1-Oct-90 | 86.5 | 14-Dec-97 |
| Steel Design | 1-Oct-90 | 12 | 29-Sep-91 |
| Coils | 30-Sep-91 | 50.5 | 14-Dec-95 |
| Procure Copper Coil | 30-Sep-91 | 12 | 29-Sep-92 |
| Form and Insulate Coils | 15-Dec-94 | 12 | 14-Dec-95 |
| Central Toroids | 30-Sep-91 | 50.5 | 14-Dec-95 |
| Procure Central Toroids | 30-Sep-91 | 9 | 29-Jun-92 |
| Fabricate Steel Subassembly | 15-Dec-94 | 12 | 14-Dec-95 |
| Catchers | 30-Sep-91 | 62.6 | 14-Dec-96 |
| Procure Catcher Steel | 30-Sep-91 | 12 | 29-Sep-92 |
| Fabricate Catcher Subassemb | 15-Dec-95 | 12 | 14-Dec-96 |
| End Toroids | 30-Sep-91 | 62.6 | 14-Dec-96 |
| Procure End Toroids | 30-Sep-91 | 12 | 29-Sep-92 |
| Fabricate E Toroid Subassem | 15-Dec-95 | 12 | 14-Dec-96 |
| Assembly | 15-Dec-95 | 24 | 14-Dec-97 |
| Assemble Central Toroid | 15-Dec-95 | 12 | 14-Dec-96 |
| Assemble Catchers on Platfo | 15-Dec-96 | 12 | 14-Dec-97 |
| Assemble End Toroids | 15-Dec-96 | 12 | 14-Dec-97 |
| Steel Work Complete | 15-Dec-97 | 0 | 15-Dec-97 |
| CALORIMETER | 1-Oct-90 | 92.5 | 14-Jun-98 |
| Calorimeter Disassembly Plans | 1-Oct-90 | 6 | 31-Mar-91 |
| Disassemble & Pack | 1-Apr-91 | 12 | 29-Mar-92 |
| Ship & Prep Cryostats | 15-Dec-94 | 8 | 15-Aug-95 |
| Ship & Test Modules | 15-Dec-94 | 15 | 16-Mar-96 |
| Install Modules & Cable | 17-Mar-96 | 18 | 15-Sep-97 |
| Weld, Test & Install Cryostats | 15-Dec-97 | 6 | 14-Jun-98 |
| MUON CHAMBER | 1-Oct-90 | 98.5 | 14-Dec-98 |
| Design Muon Chambers | 1-Oct-90 | 12 | 29-Sep-91 |
| Prototype & Test Chambers | 30-Sep-91 | 6 | 30-Mar-92 |
| Produce Muon Chambers | 15-Dec-94 | 24 | 14-Dec-96 |
| Install Catcher Chambers | 15-Dec-97 | 9 | 15-Sep-98 |
| Install & Align Muon Chambers | 15-Dec-97 | 12 | 14-Dec-98 |
| CENTRAL TRACKER | 1-Oct-90 | 95.5 | 14-Sep-98 |
| Central Tracker R&D | 1-Oct-90 | 12 | 29-Sep-91 |
| Tracker Prototype & Tests | 30-Sep-91 | 12 | 29-Sep-92 |
| Central Tracker Fabrication | 15-Dec-94 | 24 | 14-Dec-96 |
| Test & Calibrate | 15-Dec-96 | 6 | 14-Jun-97 |
| Install Tracker & Cables | 15-Jun-98 | 3 | 14-Sep-98 |
| Close & Move Inner Detector | 15-Sep-98 | 3 | 12-Dec-98 |
| DETECTOR OPERATIONAL | 15-Dec-98 | 0 | 15-Dec-98 |

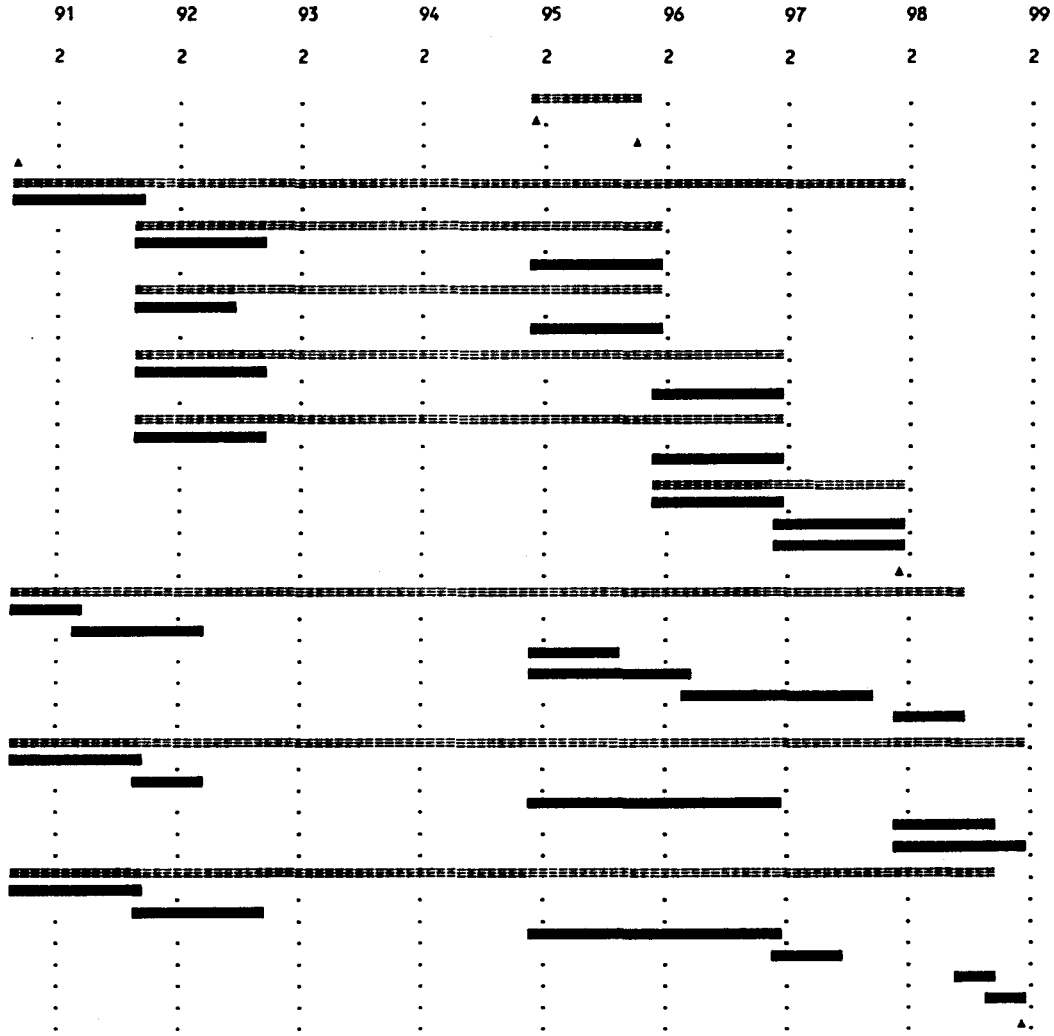


Schedule K6 - 3

SUMMARY OF MODEL SCHEDULE OF K6 DEVELOPMENT

| Task Name | Start Date | Duratn (Mths) | End Date |
|---|---|---|---|
| + Cluster Land Acquisition | 1-Apr-89 | 19.3 | 9-Nov-90 |
| + A-E/CM Selection | 15-Jan-89 | 8.6 | 1-Oct-89 |
| Far Cluster Infrastructure | 1-Dec-90 | 27.7 | 24-Mar-93 |
| Electrical (Title 1-3) | 1-Dec-90 | 14.5 | 15-Feb-92 |
| Water (Title 1-3) | 20-Jul-91 | 9.5 | 2-May-92 |
| Communications (Title 1-3) | 20-Apr-92 | 7.2 | 25-Nov-92 |
| Roads (Title 1-3) | 15-Aug-91 | 19.3 | 24-Mar-93 |
| Auxiliary Systems (Title 1-3) | 15-Mar-92 | 5 | 15-Aug-92 |
| Phys Rsrch Div Detector Activ. | 1-Jun-89 | 35.5 | 15-May-92 |
| + Preliminary detector R&D | 1-Jun-89 | 28 | 1-Oct-91 |
| Approval process | 15-May-90 | 24.1 | 15-May-92 |
| First letter of intent | 15-May-90 | 0 | 15-May-90 |
| PAC Meeting | 1-Jul-90 | 1 | 1-Aug-90 |
| Proposal for experiments | 15-May-91 | 0 | 15-May-91 |
| PAC Meeting | 1-Jul-91 | 1 | 1-Aug-91 |
| Stage I approval | 1-Oct-91 | 0 | 1-Oct-91 |
| DETECTOR DESIGN REPORT | 15-May-91 | 12.1 | 15-May-92 |
| K6 IR Construction | 15-May-91 | 55.9 | 12-Jan-96 |
| Preliminary design studies | 15-May-91 | 4.5 | 30-Sep-91 |
| Conceptual Design | 15-Oct-92 | 2.6 | 31-Dec-92 |
| Title I | 2-Jan-93 | 3 | 31-Mar-93 |
| Title II | 1-Apr-93 | 6 | 30-Sep-93 |
| Contracts bid | 1-Oct-93 | 2 | 30-Nov-93 |
| CONTRACTS AWARDED | 1-Dec-93 | 0 | 1-Dec-93 |
| + K6 Surface (phase I) | 1-Dec-93 | 12.5 | 14-Dec-94 |
| Phase I Beneficial Occupancy | 15-Dec-94 | 0 | 15-Dec-94 |
| + K6 Hall Construction | 1-Dec-93 | 25.4 | 12-Jan-96 |
| Hall Beneficial Occupancy | 31-Oct-95 | 0 | 31-Oct-95 |
| + K6 Surface (phase II) | 23-Feb-95 | 5.8 | 17-Aug-95 |
| Phase II Beneficial Occupancy | 18-Aug-95 | 0 | 18-Aug-95 |
| K6 DETECTOR (Up-graded DO) | 1-Oct-90 | 98.5 | 14-Dec-98 |
| FUND ENG. DESIGN & SPECIF. R&D | 1-Oct-90 | 0 | 1-Oct-90 |
| + STEEL | 1-Oct-90 | 86.5 | 14-Dec-97 |
| + CALORIMETER | 1-Oct-90 | 92.5 | 14-Jun-98 |
| + MUON CHAMBER | 1-Oct-90 | 98.5 | 14-Dec-98 |
| + CENTRAL TRACKER | 1-Oct-90 | 95.5 | 14-Sep-98 |
| Close & Move Inner Detector | 15-Sep-98 | 3 | 14-Dec-98 |
| DETECTOR OPERATIONAL | 15-Dec-98 | 0 | 15-Dec-98 |

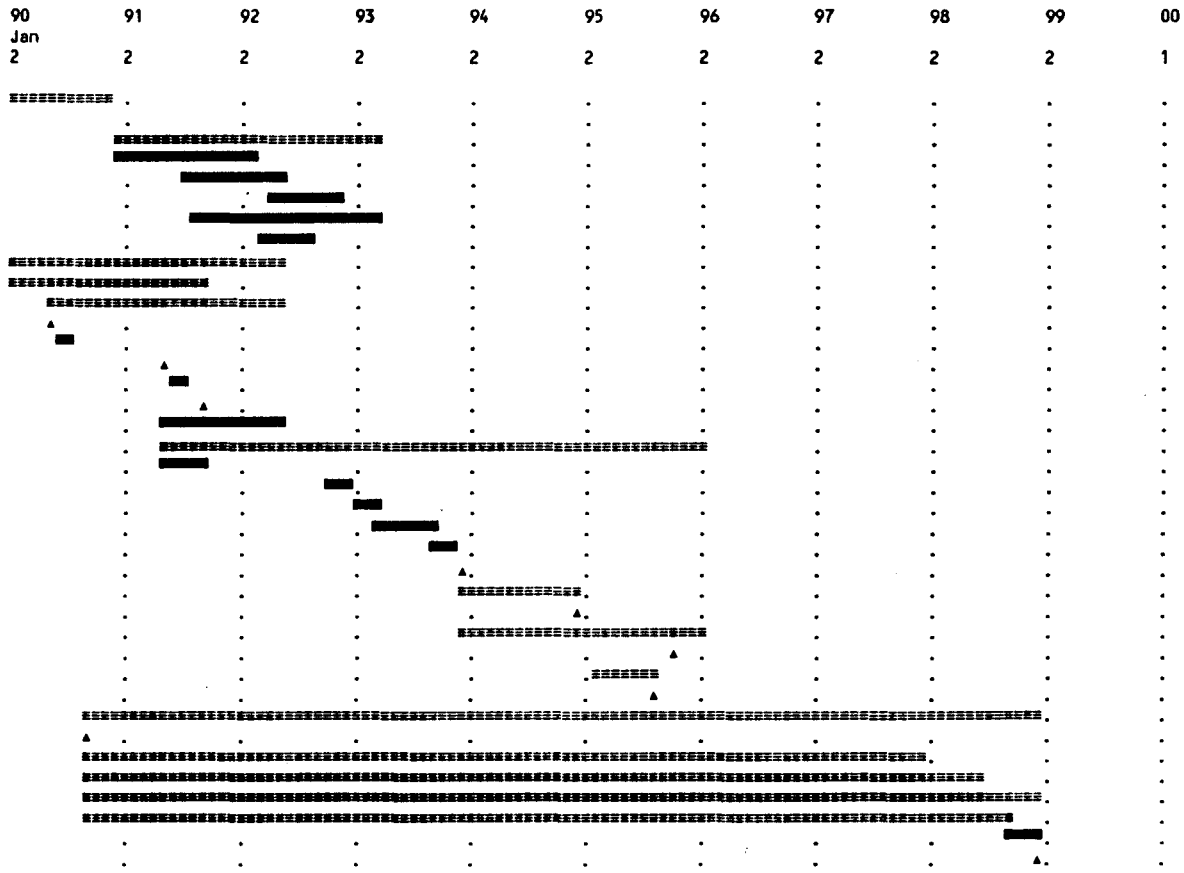


Schedule K6 - 4

CRITICAL PATH FOR U-DO w/o considering building availability

Select filter : Critical Path

| Task Name | Start Date | Duratn (Mths) | End Date |
|---|---|---|---|
| BUILDINGS | 2-Jan-90 | 0 | 2-Jan-90 |
| Buildings K61 - K66 Ready | 2-Jan-90 | 0 | 2-Jan-90 |
| Experimental Hall Complete | 2-Jan-90 | 0 | 2-Jan-90 |
| FUND ENG. DESIGN & SPECIF. R&D | 1-Oct-90 | 0 | 1-Oct-90 |
| STEEL | 1-Oct-90 | 57 | 1-Jul-95 |
| Steel Design | 1-Oct-90 | 12 | 29-Sep-91 |
| Central Toroids | 30-Sep-91 | 21 | 30-Jun-93 |
| Procure Central Toroids | 30-Sep-91 | 9 | 29-Jun-92 |
| Fabricate Steel Subassembly | 30-Jun-92 | 12 | 30-Jun-93 |
| End Toroids | 30-Sep-91 | 33.1 | 1-Jul-94 |
| Fabricate E Toroid Subassem | 1-Jul-93 | 12 | 1-Jul-94 |
| Assembly | 1-Jul-93 | 24 | 1-Jul-95 |
| Assemble Central Toroid | 1-Jul-93 | 12 | 1-Jul-94 |
| Assemble End Toroids | 2-Jul-94 | 12 | 1-Jul-95 |
| MUON CHAMBER | 1-Oct-90 | 69 | 30-Jun-96 |
| Install & Align Muon Chambers | 2-Jul-95 | 12 | 30-Jun-96 |
| DETECTOR OPERATIONAL | 1-Jul-96 | 0 | 1-Jul-96 |

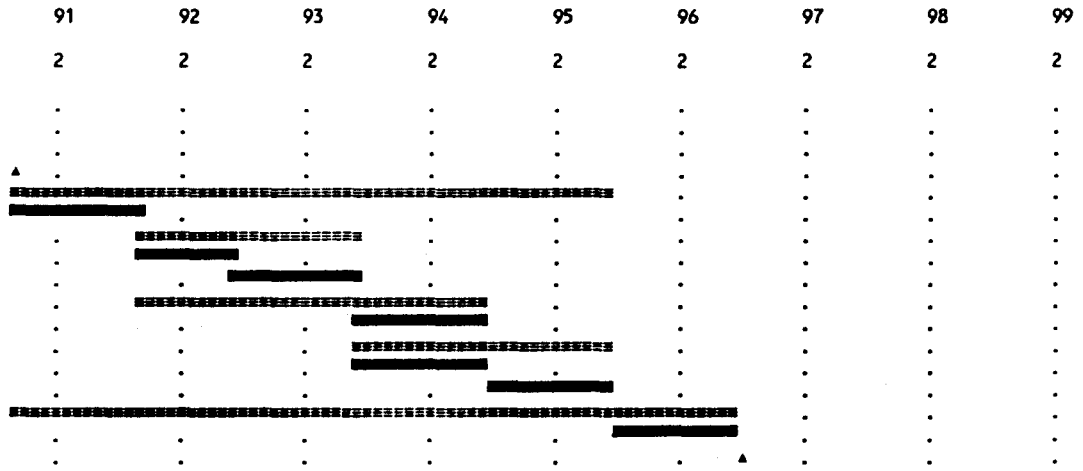


Detail Task — Summary Task — Milestone
(Started) — (Started) — Conflict
(Slack) — (Slack) — Resource delay

Scale: 1 month per character

Schedule K6 - 5

CRITICAL PATH FOR U-DO considering building availability

Select filter : Critical Path

| Task Name | Start Date | Duratn (Mths) | End Date |
|---|---|---|---|
| BUILDINGS | 15-Dec-94 | 10.5 | 30-Oct-95 |
| Buildings K61 - K66 Ready | 15-Dec-94 | 0 | 15-Dec-94 |
| Experimental Hall Complete | 31-Oct-95 | 0 | 31-Oct-95 |
| FUND ENG. DESIGN & SPECIF. R&D | 1-Oct-90 | 0 | 1-Oct-90 |
| STEEL | 1-Oct-90 | 86.5 | 14-Dec-97 |
| Central Toroids | 30-Sep-91 | 50.5 | 14-Dec-95 |
| Fabricate Steel Subassembly | 15-Dec-94 | 12 | 14-Dec-95 |
| End Toroids | 30-Sep-91 | 62.6 | 14-Dec-96 |
| Fabricate E Toroid Subassem | 15-Dec-95 | 12 | 14-Dec-96 |
| Assembly | 15-Dec-95 | 24 | 14-Dec-97 |
| Assemble Central Toroid | 15-Dec-95 | 12 | 14-Dec-96 |
| Assemble End Toroids | 15-Dec-96 | 12 | 14-Dec-97 |
| MUON CHAMBER | 1-Oct-90 | 98.5 | 14-Dec-98 |
| Install & Align Muon Chambers | 15-Dec-97 | 12 | 14-Dec-98 |
| DETECTOR OPERATIONAL | 15-Dec-98 | 0 | 15-Dec-98 |

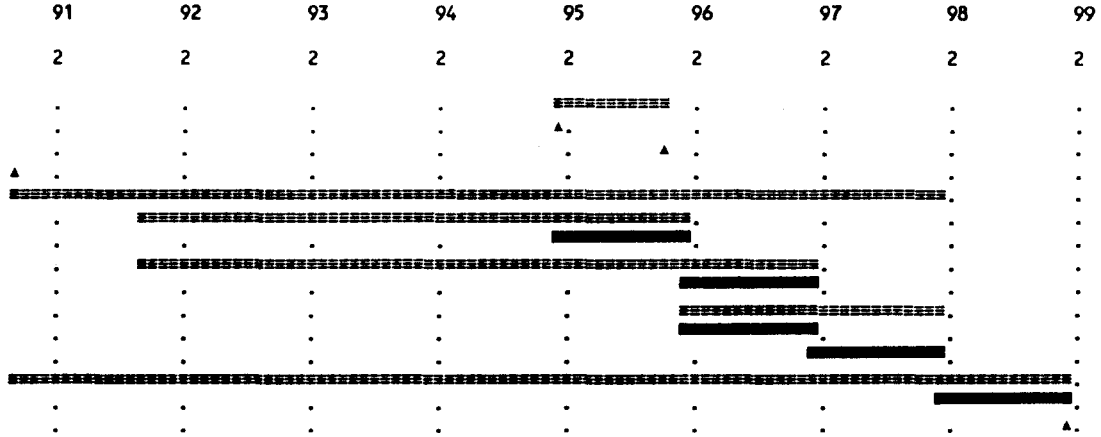


Detail Task — Summary Task — Milestone
(Started) — (Started) — Conflict
(Slack) — (Slack) — Resource delay

Scale: 1 month per character

Schedule K6 - 6

# CHAPTER 7

# CONCLUSIONS

We have presented a study of a generic program of SSC detectors, with emphasis on the underground and surface facilities needed to construct and commission them. From these studies, we have developed model construction schedules for detector commissioning which are contingent upon the availability of the requisite support facilities as projected in the construction schedule.

Judging from the available information about the local geology and construction experience, the most likely method of underground facility construction will be "cut and cover." This would necessitate a very large open pit with an access ramp to one side. This approach points to construction of surface facilities outside the area of the pit boundaries if surface facilities are to be available early enough to avoid being on the critical path for detector construction. Similarly this approach requires equipment shafts to be built away from the halls, which in turn requires transfer mechanisms to be from the shafts into the halls. These factors must be studied further to determine the overall time and cost effectiveness of this approach. Clearly the effectiveness of this approach depends on the details of particular detectors. A study must also be made to optimize arrangement of the surface facilities relative to the distribution of local, shared and central facilities. This optimization depends on the weight and number of components, as well as the proximity of the experimental areas to shared sites.

This report has not considered the optimization of the distribution of detectors relative to the geology and topology of each IR location, e.g., whether there are cost or operational savings in siting a very heavy and immobile detector, or one with heavy mobile parts, in a particular geology. Again, a final optimization of these decisions needs refined geological information and input from detector designers. These decisions are also influenced by prior decisions on shared surface facilities, since it may be convenient to site those experiments not requiring major surface plants further away from centralized facilities.

A major implication of this study is the projected time scale for construction of the detectors. Some variation, which may or may not be realized, is indicated between the longest (BCD) and shortest (DØ) schedules. These schedules will depend critically on the actual choices of technology used, the progress of the research and development necessary to advance to detector construction, the availability of personnel to develop and advance the

detector concepts (physicists, engineers and trained technicians), the availability of fiscal resources, and the availability of raw materials for construction of the detectors, such as uranium and TMP. The problem in constructing a schedule at this early date is that one tends to overestimate the durations of large tasks, but not include times for smaller but critical tasks that could determine the overall schedule. A real schedule and its optimization can only be developed within a much more detailed understanding of the actual detectors, and should be a high priority once letters of intent to provide detectors are submitted. At the earliest possible time one should determine the actual hall parameters and surface facility requirements for the detectors, because delays in design and construction of these facilities may have an impact on the critical path for detector availability. An example of this dependence would be an assumption of constructing the LSD coil at the site. Construction of the support facilities for this effort would then drive the completion date later. There is also a very high priority on determining special requirements for the detectors, including shaft sizes, crane requirements, hall sizes, assembly areas (above and below ground), and requirements for access and mobility.

In order to explore the impact of these considerations on the model schedules, we have iterated them with several possible means of expediting detector completion. Schedule 7-1 for the LSD (Schedule K1-3 in Chapter 6) had already incorporated a provision for funding detector-specific R&D and high-level engineering assistance for detector design and integration. We have suggested that funding for these activities occur soon after the submission of the letters of intent are reviewed by the PAC. This will precede formal approval of an experiment, but we believe that the number of LOIs will not be significantly larger than the number finally approved. The cost of this engineering will be small compared to the full-scale effort, and the advantage of moving these phases up significantly far outweigh any extraneous effort involved.

Schedule 7-2 shows an additional three-month improvement of the LSD completion date that can be effected by beginning preliminary design of the underground experimental facilities as soon as the LOIs are received. Here again, we believe that there will be few LOIs, and they will most probably fall into generic classes of detector size and weight — hopefully similar to those considered in our report — and thus there will not be much wasted effort in beginning specific hall designs in concert with the engineering integration work on the detectors mentioned above.

Schedule 7-3 shows an even more significant advance of the completion date, which is accomplished by not requiring local surface facilities be complete before detector subassembly work begins. This implies that these facilities must be available elsewhere, either on site at the main campus or in the Waxahachie vicinity. We do not consider the fiscal impact of requiring the availability of these facilities, but rather note that almost a year can be gained if they are available.

We see this report and these schedules not as a definitive statement of when detectors can be ready to run experiments with the SSC, but rather as a working document providing input for helping to expedite that date. We emphasize the necessity of early starts for detector engineering and R&D, as well as early consideration and design work for the specific facilities required to house these detectors. Development of both the underground and surface facilities must proceed rapidly if they are not to impede the commissioning of the experimental program at the SSC.

SUMMARY OF MODEL SCHEDULE OF K1 DEVELOPMENT

| Task Name | Start Date | Duratn (Mths) | End Date |
|---|---|---|---|
| + Near Cluster Land Acquisition | 1-Apr-89 | 15.3 | 9-Jul-90 |
| + A-E/CM Selection | 15-Jan-89 | 8.6 | 1-Oct-89 |
| Near Cluster Infrastructure | 2-Jan-90 | 38.7 | 24-Mar-93 |
| Electrical (Title 1-3) | 2-Jan-90 | 14.4 | 15-Mar-91 |
| Water (Title 1-3) | 1-Apr-90 | 9.5 | 15-Jan-91 |
| Communications (Title 1-3) | 1-Jun-90 | 7.2 | 6-Jan-91 |
| Roads (Title 1-3) | 15-Aug-91 | 19.3 | 24-Mar-93 |
| Auxiliary Systems (Title 1-3) | 15-Mar-92 | 5 | 15-Aug-92 |
| Phys Rsrch Div Detector Activ. | 1-Jun-89 | 35.5 | 15-May-92 |
| + Preliminary detector R&D | 1-Jun-89 | 28 | 1-Oct-91 |
| Approval process | 15-May-90 | 24.1 | 15-May-92 |
| First letter of intent | 15-May-90 | 0 | 15-May-90 |
| PAC Meeting | 1-Jul-90 | 1 | 1-Aug-90 |
| Proposal for experiments | 15-May-91 | 0 | 15-May-91 |
| PAC Meeting | 1-Jul-91 | 1 | 1-Aug-91 |
| Stage I approval | 1-Oct-91 | 0 | 1-Oct-91 |
| DETECTOR DESIGN REPORT | 15-May-91 | 12.1 | 15-May-92 |
| K1 IR Construction | 15-May-91 | 48.2 | 21-May-95 |
| Preliminary Design Studies | 15-May-91 | 4.5 | 30-Sep-91 |
| Conceptual Design | 1-Oct-91 | 2.5 | 14-Dec-91 |
| Title I | 15-Dec-91 | 3 | 14-Mar-92 |
| Title II | 15-Mar-92 | 6 | 14-Sep-92 |
| Contracts bid | 15-Sep-92 | 2 | 14-Nov-92 |
| CONTRACTS AWARDED | 15-Nov-92 | 0 | 15-Nov-92 |
| + K1 SURFACE (phase I) | 15-Nov-92 | 12.5 | 30-Nov-93 |
| Phase I Beneficial Occupancy | 1-Dec-93 | 0 | 1-Dec-93 |
| + K1 HALL CONSTRUCTION | 15-Nov-92 | 28.9 | 11-Apr-95 |
| Hall Beneficial Occupancy | 10-Mar-95 | 0 | 10-Mar-95 |
| + K1 SURFACE (phase II) | 14-Sep-94 | 8.3 | 21-May-95 |
| Phase II Beneficial Occupancy | 22-May-95 | 0 | 22-May-95 |
| K1 DETECTOR (Large Solenoid) | 1-Oct-90 | 99.1 | 31-Dec-98 |
| FUND ENG. DESIGN & SPECIF. R&D | 1-Oct-90 | 0 | 1-Oct-90 |
| + STEEL | 2-Jan-91 | 78.3 | 9-Jul-97 |
| + COIL | 1-Oct-90 | 89.1 | 2-Mar-98 |
| + MUON CHAMBER | 1-Oct-90 | 77.3 | 8-Mar-97 |
| LIQUID ARGON CALORIMETER | 1-Oct-90 | 83.1 | 2-Sep-97 |
| + LAC Modules | 1-Oct-90 | 68.1 | 2-Jun-96 |
| + LAC Cryostat | 31-Mar-91 | 77.1 | 2-Sep-97 |
| INTERNAL DETECTOR | 1-Oct-90 | 99.1 | 31-Dec-98 |
| Internal Detector Specifica | 1-Oct-90 | 9 | 30-Jun-91 |
| + Vertex Chamber | 1-Jul-91 | 60 | 30-Jun-96 |
| + Central Tracker | 1-Jul-91 | 66 | 29-Dec-96 |
| + Internal Detector Assembly | 3-Mar-98 | 10 | 31-Dec-98 |
| DETECTOR OPERATIONAL | 2-Jan-99 | 0 | 2-Jan-99 |

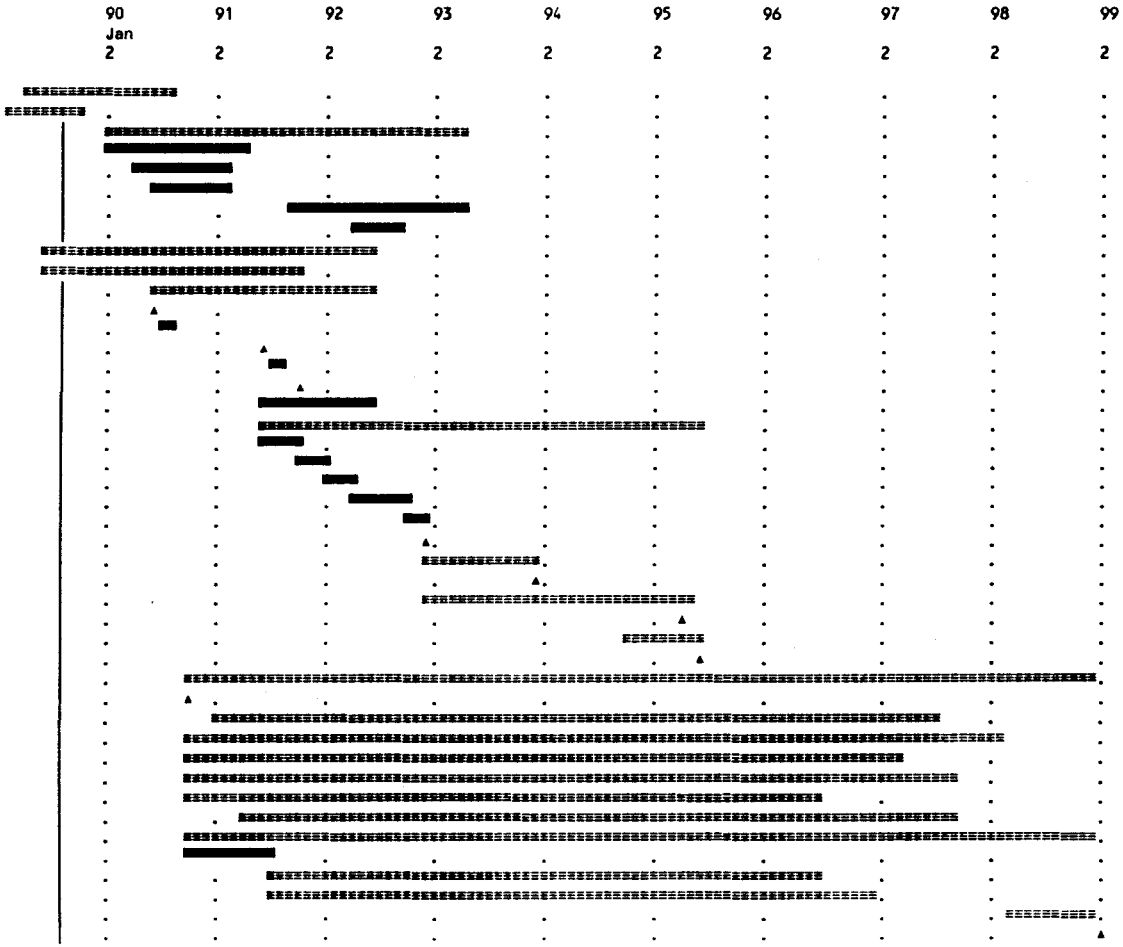


Detail Task  Summary Task  Milestone

**Schedule 7 - 1**

SUMMARY OF MODEL SCHEDULE OF K1 DEVELOPMENT
start Preliminary Design date based on Letter of Intent

| Task Name | | Start Date | Duratn (Mths) | End Date |
|---|---|---|---|---|
| + Near Cluster Land Acquisition | | 1-Apr-89 | 15.3 | 9-Jul-90 |
| + A-E/CM Selection | | 15-Jan-89 | 8.6 | 1-Oct-89 |
| Near Cluster Infrastructure | | 2-Jan-90 | 38.7 | 24-Mar-93 |
| Electrical | (Title 1-3) | 2-Jan-90 | 14.4 | 15-Mar-91 |
| Water | (Title 1-3) | 1-Apr-90 | 9.5 | 15-Jan-91 |
| Communications | (Title 1-3) | 1-Jun-90 | 7.2 | 6-Jan-91 |
| Roads | (Title 1-3) | 15-Aug-91 | 19.3 | 24-Mar-93 |
| Auxiliary Systems | (Title 1-3) | 15-Mar-92 | 5 | 15-Aug-92 |
| Phys Rsrch Div Detector Activ. | | 1-Jun-89 | 35.5 | 15-May-92 |
| + Preliminary detector R&D | | 1-Jun-89 | 28 | 1-Oct-91 |
| Approval process | | 15-May-90 | 24.1 | 15-May-92 |
| First letter of intent | | 15-May-90 | 0 | 15-May-90 |
| PAC Meeting | | 1-Jul-90 | 1 | 1-Aug-90 |
| Proposal for experiments | | 15-May-91 | 0 | 15-May-91 |
| PAC Meeting | | 1-Jul-91 | 1 | 1-Aug-91 |
| Stage I approval | | 1-Oct-91 | 0 | 1-Oct-91 |
| DETECTOR DESIGN REPORT | | 15-May-91 | 12.1 | 15-May-92 |
| K1 IR Construction | | 15-May-90 | 57.8 | 8-Mar-95 |
| Preliminary Design Studies | | 15-May-90 | 11 | 14-Apr-91 |
| Conceptual Design | | 15-Apr-91 | 2.5 | 30-Jun-91 |
| Title I & review | | 1-Jul-91 | 3 | 30-Sep-91 |
| Title II & review | | 1-Oct-91 | 8 | 31-May-92 |
| Contracts bid & review | | 1-Jun-92 | 3 | 31-Aug-92 |
| CONTRACTS AWARDED | | 1-Sep-92 | 0 | 1-Sep-92 |
| + K1 SURFACE (phase I) | | 1-Sep-92 | 12.5 | 17-Sep-93 |
| Phase I Beneficial Occupancy | | 18-Sep-93 | 0 | 18-Sep-93 |
| + K1 HALL CONSTRUCTION | | 1-Sep-92 | 28.9 | 27-Jan-95 |
| Hall Beneficial Occupancy | | 24-Dec-94 | 0 | 24-Dec-94 |
| + K1 SURFACE (phase II) | | 30-Jun-94 | 8.3 | 8-Mar-95 |
| Phase II Beneficial Occupancy | | 9-Mar-95 | 0 | 9-Mar-95 |
| K1 DETECTOR (Large Solenoid) | | 1-Oct-90 | 96.6 | 17-Oct-98 |
| FUND ENG. DESIGN & SPECIF. R&D | | 1-Oct-90 | 0 | 1-Oct-90 |
| + STEEL | | 2-Jan-91 | 75.8 | 24-Apr-97 |
| + COIL | | 1-Oct-90 | 86.6 | 16-Dec-97 |
| + MUON CHAMBER | | 1-Oct-90 | 74.8 | 22-Dec-96 |
| LIQUID ARGON CALORIMETER | | 1-Oct-90 | 80.6 | 18-Jun-97 |
| + LAC Modules | | 1-Oct-90 | 65.6 | 19-Mar-96 |
| + LAC Cryostat | | 31-Mar-91 | 74.7 | 18-Jun-97 |
| INTERNAL DETECTOR | | 1-Oct-90 | 96.6 | 17-Oct-98 |
| Internal Detector Specifica | | 1-Oct-90 | 9 | 30-Jun-91 |
| + Vertex Chamber | | 1-Jul-91 | 60 | 30-Jun-96 |
| + Central Tracker | | 1-Jul-91 | 66 | 29-Dec-96 |
| + Internal Detector Assembly | | 17-Dec-97 | 10 | 17-Oct-98 |
| DETECTOR OPERATIONAL | | 18-Oct-98 | 0 | 18-Oct-98 |

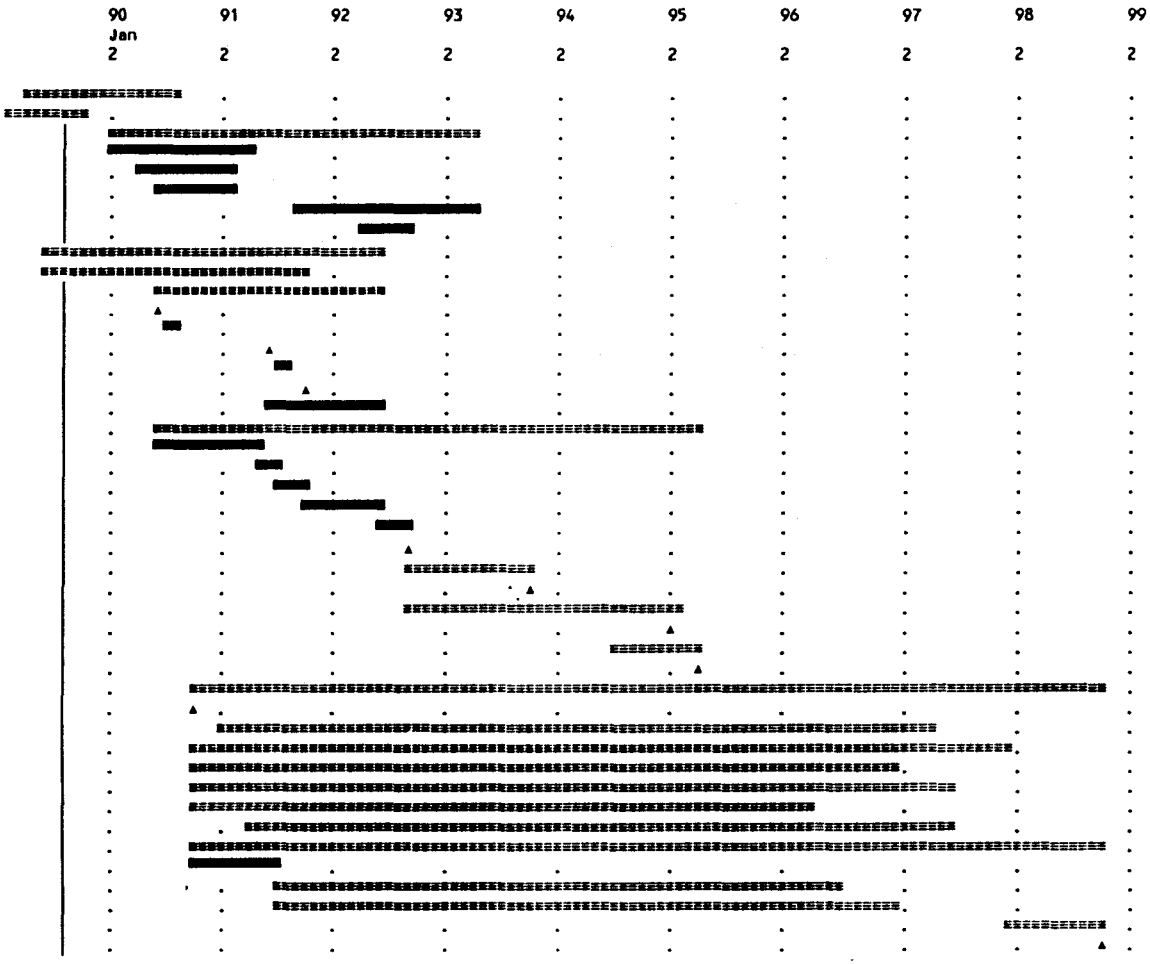


Detail Task  Summary Task  Milestone

**Schedule 7 - 2**

SUMMARY OF MODEL SCHEDULE OF K1 DEVELOPMENT
removed detector dependancies on local surface facilities

| Task Name | | Start Date | Duratn (Mths) | End Date |
|---|---|---|---|---|
| + Near Cluster Land Acquisition | | 1-Apr-89 | 15.3 | 9-Jul-90 |
| + A-E/CM Selection | | 15-Jan-89 | 8.6 | 1-Oct-89 |
| Near Cluster Infrastructure | | 2-Jan-90 | 38.7 | 24-Mar-93 |
| Electrical | (Title 1-3) | 2-Jan-90 | 14.4 | 15-Mar-91 |
| Water | (Title 1-3) | 1-Apr-90 | 9.5 | 15-Jan-91 |
| Communications | (Title 1-3) | 1-Jun-90 | 7.2 | 6-Jan-91 |
| Roads | (Title 1-3) | 15-Aug-91 | 19.3 | 24-Mar-93 |
| Auxiliary Systems | (Title 1-3) | 15-Mar-92 | 5 | 15-Aug-92 |
| Phys Rsrch Div Detector Activ. | | 1-Jun-89 | 35.5 | 15-May-92 |
| + Preliminary detector R&D | | 1-Jun-89 | 28 | 1-Oct-91 |
| Approval process | | 15-May-90 | 24.1 | 15-May-92 |
| First letter of intent | | 15-May-90 | 0 | 15-May-90 |
| PAC Meeting | | 1-Jul-90 | 1 | 1-Aug-90 |
| Proposal for experiments | | 15-May-91 | 0 | 15-May-91 |
| PAC Meeting | | 1-Jul-91 | 1 | 1-Aug-91 |
| Stage I approval | | 1-Oct-91 | 0 | 1-Oct-91 |
| DETECTOR DESIGN REPORT | | 15-May-91 | 12.1 | 15-May-92 |
| K1 IR Construction | | 15-May-90 | 57.8 | 8-Mar-95 |
| Preliminary Design Studies | | 15-May-90 | 11 | 14-Apr-91 |
| Conceptual Design | | 15-Apr-91 | 2.5 | 30-Jun-91 |
| Title I & review | | 1-Jul-91 | 3 | 30-Sep-91 |
| Title II & review | | 1-Oct-91 | 8 | 31-May-92 |
| Contracts bid & review | | 1-Jun-92 | 3 | 31-Aug-92 |
| CONTRACTS AWARDED | | 1-Sep-92 | 0 | 1-Sep-92 |
| + K1 SURFACE (phase I) | | 1-Sep-92 | 12.5 | 17-Sep-93 |
| + K1 HALL CONSTRUCTION | | 1-Sep-92 | 28.9 | 27-Jan-95 |
| Hall Beneficial Occupancy | | 24-Dec-94 | 0 | 24-Dec-94 |
| + K1 SURFACE (phase II) | | 30-Jun-94 | 8.3 | 8-Mar-95 |
| Phase II Beneficial Occupancy | | 9-Mar-95 | 0 | 9-Mar-95 |
| K1 DETECTOR (Large Solenoid) | | 1-Oct-90 | 85 | 30-Oct-97 |
| FUND ENG. DESIGN & SPECIF. R&D | | 1-Oct-90 | 0 | 1-Oct-90 |
| + STEEL | | 2-Jan-91 | 75.8 | 24-Apr-97 |
| + COIL | | 1-Oct-90 | 71.8 | 24-Sep-96 |
| + MUON CHAMBER | | 1-Oct-90 | 74.8 | 22-Dec-96 |
| LIQUID ARGON CALORIMETER | | 1-Oct-90 | 75 | 30-Dec-96 |
| + LAC Modules | | 1-Oct-90 | 60 | 1-Oct-95 |
| + LAC Cryostat | | 31-Mar-91 | 69.1 | 30-Dec-96 |
| INTERNAL DETECTOR | | 1-Oct-90 | 85 | 30-Oct-97 |
| Internal Detector Specifica | | 1-Oct-90 | 9 | 30-Jun-91 |
| + Vertex Chamber | | 1-Jul-91 | 60 | 30-Jun-96 |
| + Central Tracker | | 1-Jul-91 | 66 | 29-Dec-96 |
| + Internal Detector Assembly | | 31-Dec-96 | 10 | 30-Oct-97 |
| DETECTOR OPERATIONAL | | 31-Oct-97 | 0 | 31-Oct-97 |

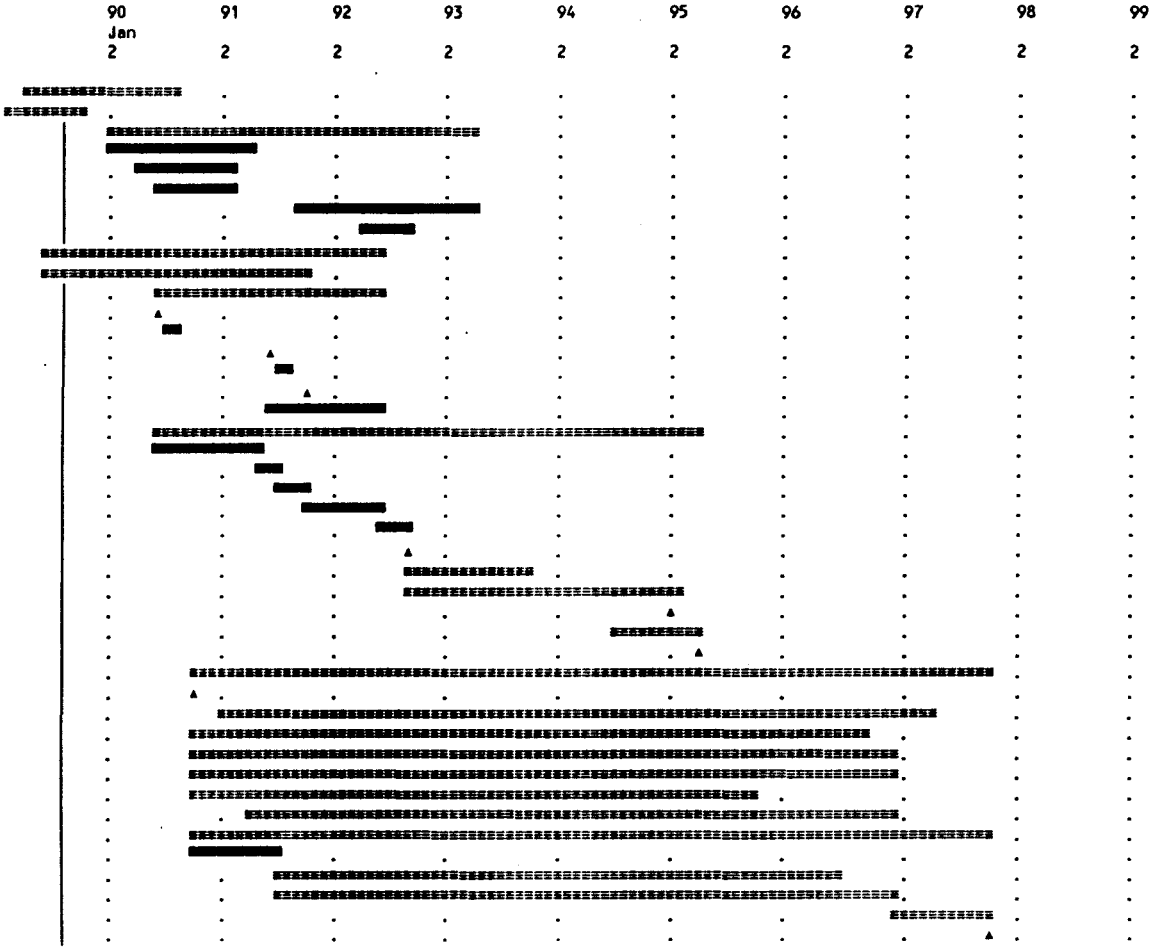


Detail Task (Started) — Summary Task (Started) — Milestone — Conflict

Schedule 7 - 3

# APPENDIX

# DRAWINGS

## LIST OF DRAWINGS

**General Drawings**

| | |
|---|---|
| G-01 | Keyplan |
| G-02 | Experimental halls profiles |

**Cut-and-Cover Construction Sequences**

| | |
|---|---|
| K1S1-01 | Cut-and-cover construction, steps 1–4 |
| K1S1-02 | Cut-and-cover construction, steps 5–8 |
| K1S1-03 | Cut-and-cover construction, step 9 |

**Cavern Construction Sequences**

| | |
|---|---|
| K1S2-01 | Cavern construction, steps 1–4 |
| K1S2-02 | Cavern construction, steps 5–8 |
| K1S2-03 | Cavern construction, steps 9–11 |

### K1: Large Solenoid Detector

| | |
|---|---|
| K1-01 | Finished hall, isometric |
| K1-02 | Finished hall, plan and sections |
| K1-03 | Cut-and-cover construction, isometric |
| K1-04 | Cut-and-cover construction, plan and section |
| K1-05 | Cut-and-cover construction, finished hall |
| K1-06 | Detector, exploded isometric |
| K1-07 | Detector, plan and sections |
| K1-08 | Detector assembly, steps 1 and 2 |
| K1-09 | Detector assembly, steps 3 and 4 |

**K1 Option A: Cut-and-Cover With Cutout**

| | |
|---|---|
| K1A-01 | Cut-and-cover with cutout, isometric |
| K1A-02 | Cut-and-cover with cutout, plan and section |

**K1 Option B: Spiral Ramp**

| | |
|---|---|
| K1B-01 | Cut-and-cover with spiral ramp, isometric |
| K1B-02 | Cut-and-cover with spiral ramp, plan and section |

**K1 Option C: Extended Hall**

| | |
|---|---|
| K1C-01 | Finished hall, isometric |
| K1C-02 | Finished hall, plan and sections |
| K1C-03 | Cut-and-cover construction, isometric |
| K1C-04 | Cut-and-cover construction, plan and sections |
| K1C-05 | Detector assembly, steps 1 and 2 |
| K1C-06 | Detector assembly, steps 3 and 4 |

**K1 Option D: Elevated Roof**

| | |
|---|---|
| K1D-01 | Finished hall, isometric |
| K1D-02 | Finished hall, plan and sections |
| K1D-03 | Cut-and-cover construction, isometric |
| K1D-04 | Cut-and-cover construction, plan and sections |

## K2: Nonmagnetic Detector

| | |
|---|---|
| K2-01 | Finished hall, isometric |
| K2-02 | Finished hall, plan and sections |
| K2-03 | Cut-and-cover construction, isometric |
| K2-04 | Cut-and-cover construction, plan and sections |
| K2-05 | Detector, exploded isometric |
| K2-06 | Detector, plan and sections |
| K2-07 | Detector assembly, steps 1 and 2 |
| K2-08 | Detector assembly, steps 3 and 4 |

## K5: Bottom Collider Detector

| | |
|---|---|
| K5-01 | Finished hall, isometric |
| K5-02 | Finished hall, plan and sections |
| K5-03 | Cut-and-cover construction, isometric |
| K5-04 | Cut-and-cover construction, plan and sections |
| K5-05 | Detector, exploded isometric |
| K5-06 | Detector assembly, steps 1 and 2 |
| K5-07 | Detector assembly, steps 3 and 4 |

## K6: DØ Upgrade

| | |
|---|---|
| K6-01 | Finished hall, isometric |
| K6-02 | Finished hall, plan and sections |
| K6-03 | Cut-and-cover construction, isometric |
| K6-04 | Cut-and-cover construction, plan and sections |
| K6-05 | Detector, exploded isometric |
| K6-06 | Detector, plan and elevations |
| K6-07 | Detector assembly, steps 1–4 |

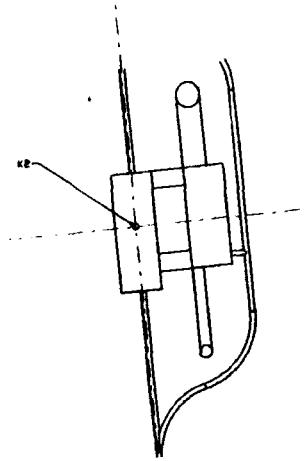


K2 - NMD

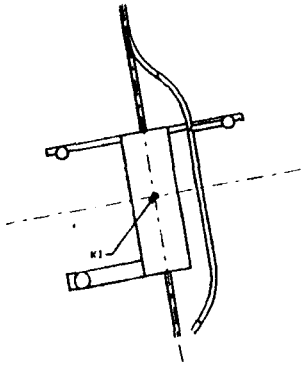


K1 - LSD

100 0 100 200 300 400

SCALE (FEET)
(FOR ALL EXPERIMENTAL HALLS)

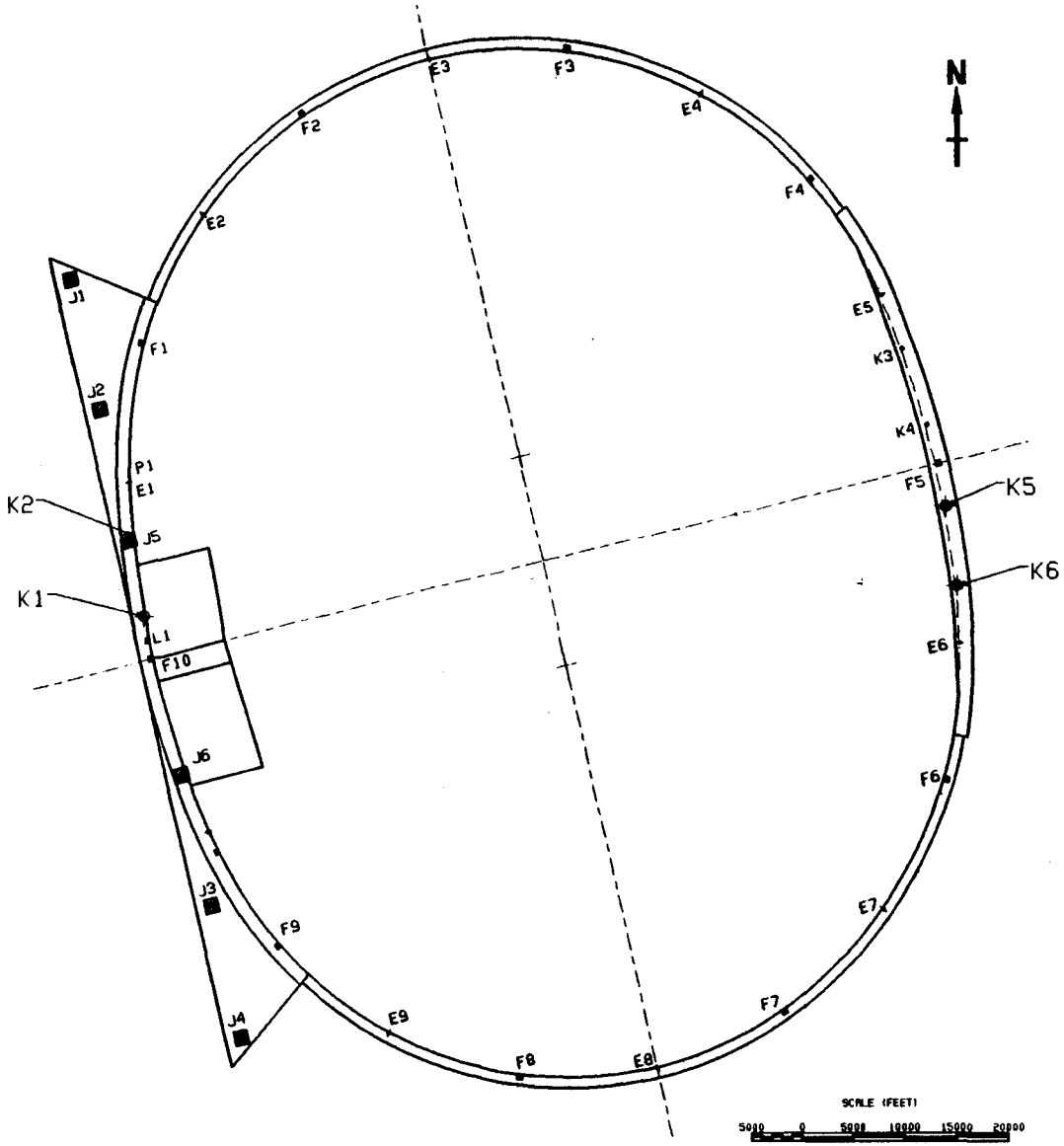


COLLIDER RING

SCALE (FEET)

5000 0 5000 10000 15000 20000

(RING)

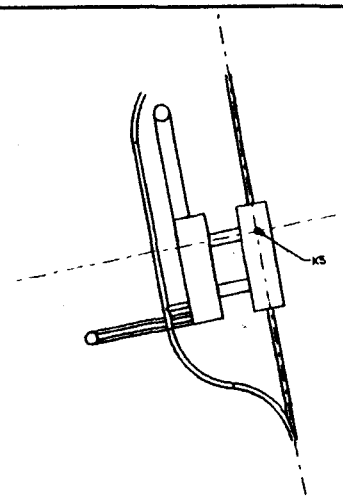


K5 - BCD

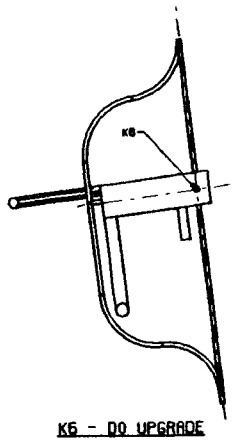


K6 - D0 UPGRADE

| NO | DATE | REVISION | BY | CHK | APP | APP | ENG DATE | REFERENCE DRAWINGS | NUMBER |
|---|---|---|---|---|---|---|---|---|---|
| | 1/18/88 | HALL DIMENSIONS UPDATED | | | | | | | |
| | 1/24/88 | HALL DIMENSIONS UPDATED | | | | | | | |
| | 1/30/88 | ISSUED FOR REVIEW | | | | | | | |

NOTES

DESCRIPTION COST ACCOUNT
CONTROL DRAWING BY THIS DRAWING CHANGED TO COST ACCOUNT BREAK

CONSTRUCTION APPROVAL

APPROVAL DATE

SCALE: AS SHOWN
DESIGNED: CDG
DRAWN: A. NUNEZ
CHECKED:
APPROVED:
DATE

PROFESSIONAL SEAL

U.S. DEPARTMENT OF ENERGY
SUPERCONDUCTING SUPER COLLIDER

SITE SPECIFIC CONCEPTUAL STUDY
EXPERIMENTAL HALLS AND DETECTORS CASE 5

KEYPLAN

RTK

URA/CDG

CONTRACT DE-AC02-89ER40030

PROJECT 05182

DRAWING G-01 DATE REV DATE 5/10/88 SHEET

ZG1: (102, 3D1660G01.DGN)

HAMILTON
12-JUN-1990 12:07

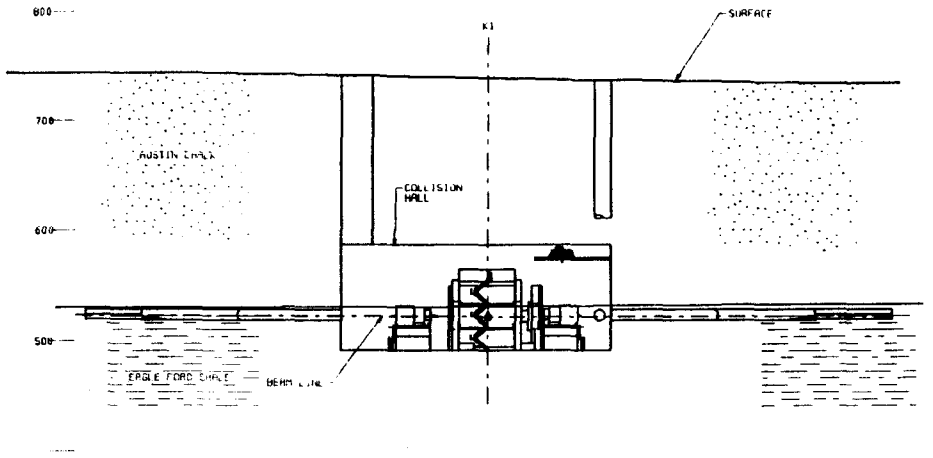


K1 - ELEVATION

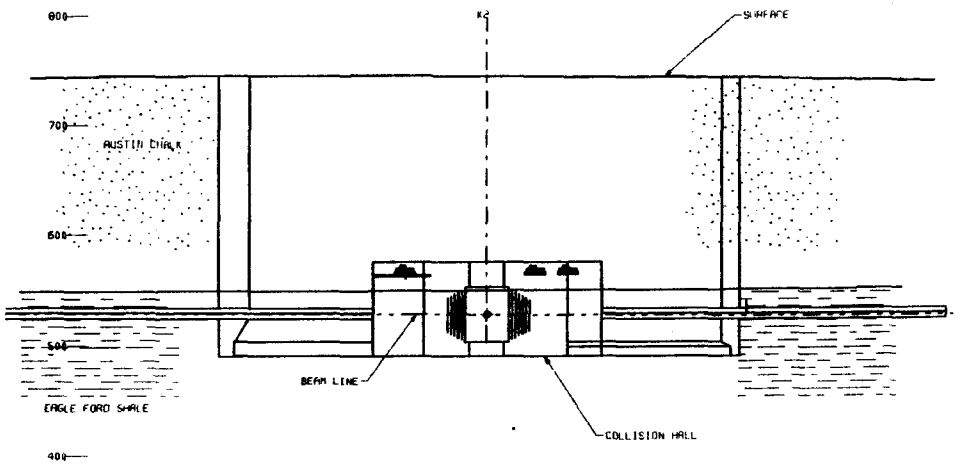


K2 - ELEVATION

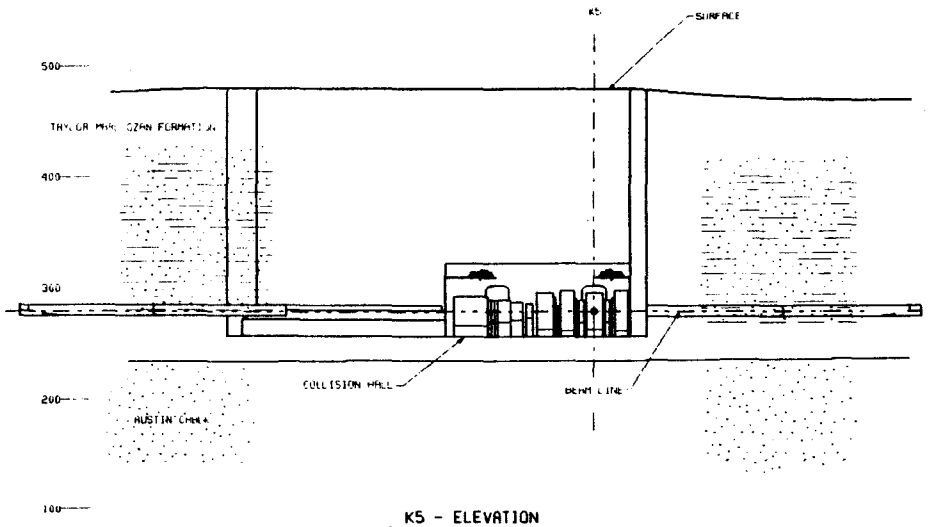


K5 - ELEVATION

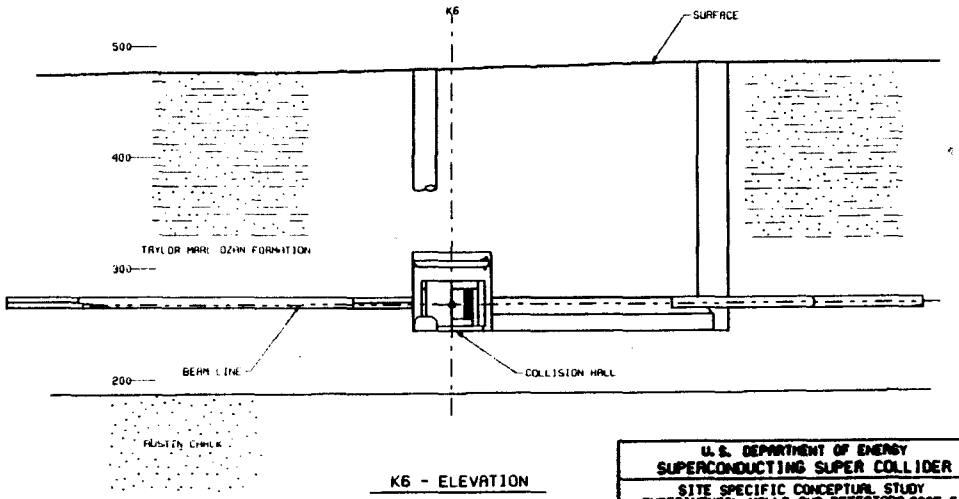


K6 - ELEVATION

1"=50' -0" 50 0 50 100 150 200

SCALE (ALL VIEWS)

| NO | DATE | REVISION | REF | REFERENCE DRAWINGS | NUMBER | NOTES |
|---|---|---|---|---|---|---|
| 1 | 3/10/88 | REVISED PER NEW DATA | | | | |
| 0 | 3/28/88 | ISSUED FOR REVIEW | | | | |

DESCRIPTION — COST ACCOUNT
WORK COVERED BY THIS ACCOUNT
CHARGED TO COST ACCOUNT ABOVE

CONSTRUCTION APPROVAL — APPROVAL — DATE

SCALE 1" = 50 — DATE

DESIGNED
DR.
CHECKED W. EKREN
DR.
APPROVED
DR.
APPROVED
DR.

PROFESSIONAL SEAL

U. S. DEPARTMENT OF ENERGY
SUPERCONDUCTING SUPER COLLIDER

SITE SPECIFIC CONCEPTUAL STUDY
EXPERIMENTAL HALLS AND DETECTORS CASE 5

EXPERIMENTAL HALLS
PROFILES

RTK

URA/CDG

CONTRACT DE-AC02-85ER40230 — PROJECT 85122

DRAWING G-02 — DATE ____ — REV B — DATE 3/10/88 — SHEET ____

Z61 (102.331550020E.DGN 1 — MUNEI 18-JUN-1988 14:42

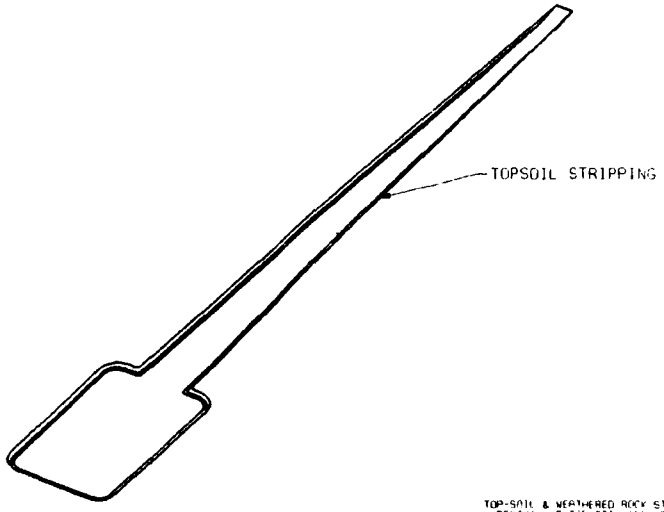


TOP-SOIL & WEATHERED ROCK STRIPPING
• REMOVAL OF TOP-SOIL AND WEATHERED ROCK TO EXPOSE INTACT BEDROCK SURFACE

STEP 1

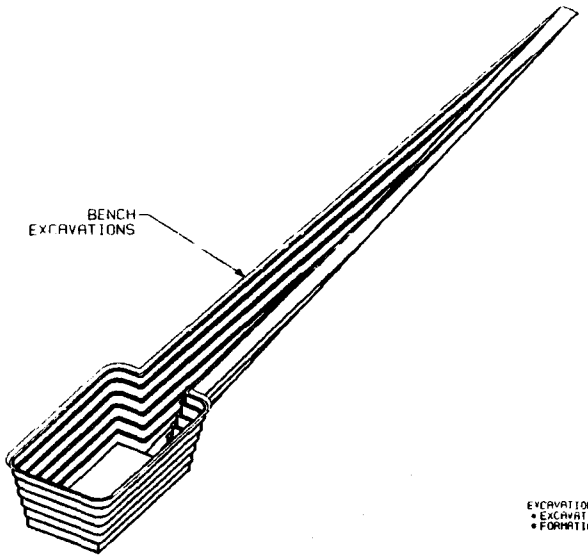


EXCAVATION OF OPEN PIT AND RAMP
• EXCAVATION OF THE RC BY RIPPER
• FORMATION OF 8m BENCHES

STEP 2

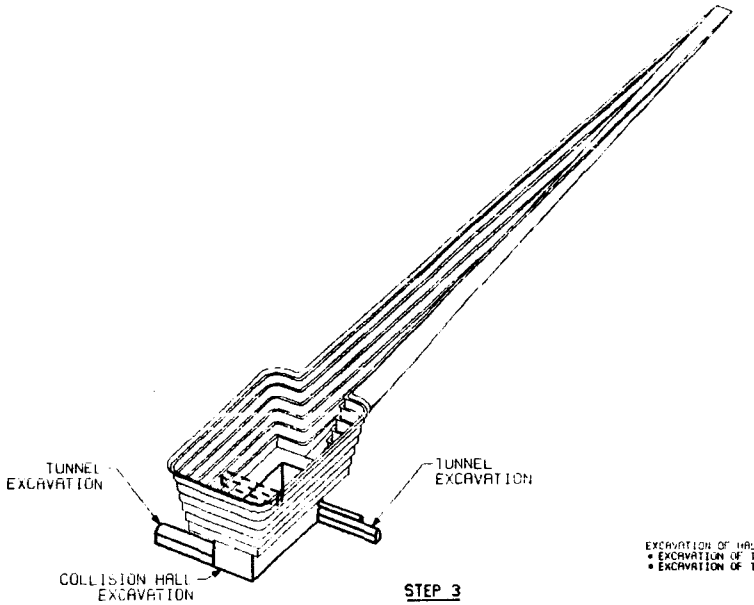


EXCAVATION OF HALL
• EXCAVATION OF THE ROCK (RC & EFS) BY RIPPER
• EXCAVATION OF THE BEAM TUNNELS

STEP 3

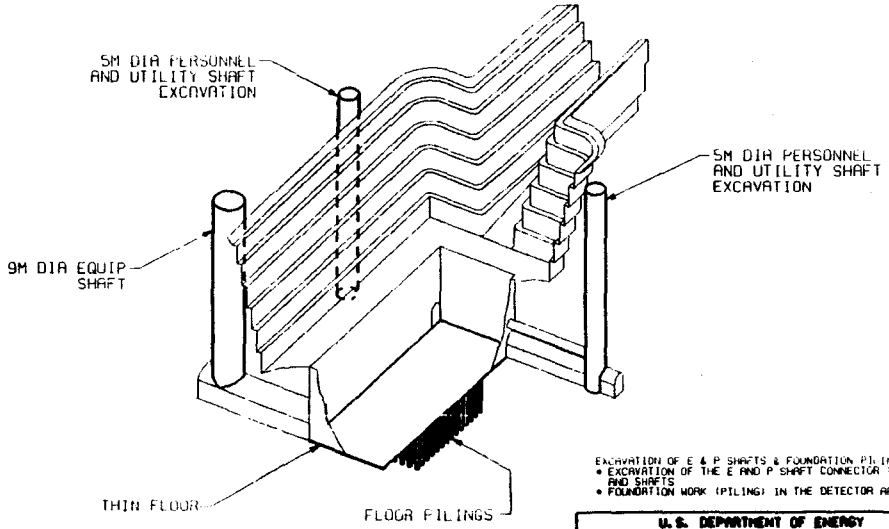


EXCAVATION OF E & P SHAFTS & FOUNDATION PILING
• EXCAVATION OF THE E AND P SHAFT CONNECTOR TUNNELS AND SHAFTS
• FOUNDATION WORK (PILING) IN THE DETECTOR AREA

STEP 4

| NO | DATE | REVISION | CHK | APP | APP | REFERENCE DRAWINGS | NUMBER |
|---|---|---|---|---|---|---|---|
| A | 4/24/89 | REMOVE RAMP, RELOCATE EQUIP SHAFT | | | | | |
| A | 3/31/89 | ISSUED FOR REVIEW | | | | | |

1. HEAVY LINE WEIGHT INDICATES CURRENT EXCAVATION OR CONSTRUCTION

NOTES

DESCRIPTION — COST ACCOUNT
COST COVERED BY THIS ACCOUNT
CARRIED TO COST ACCOUNT ABOVE

CONSTRUCTION APPROVAL

APPROVAL — DATE

SCALE: NO SCALE
DESIGNED: C. LAUGHTON
DRAWN: R. NUNEZ / S. HAMILTON
CHECKED:
APPROVED:
APPROVED:

DATE

PROFESSIONAL SEAL

**U.S. DEPARTMENT OF ENERGY**
**SUPERCONDUCTING SUPER COLLIDER**

**SITE SPECIFIC CONCEPTUAL STUDY**
**EXPERIMENTAL HALLS AND DETECTORS CASE 5**

K1 - LARGE SOLENOID DETECTOR HALL
CUT AND COVER CONSTRUCTION
STEPS 1 - 4

RMK — Morgan Engineers Inc. / Parsons Brinckerhoff Quade & Douglas Inc. / Sverdrup

URA/CDG

CONTRACT DE-AC02-85ER40230 — PROJECT 85122

DRAWING K1S1-01 — DATE ____ — REV B — DATE 4/24/89 — SHEET ____

Z61: 1102.3215600206.DGN — NUNEZ — 12-JUN-1989 08:01

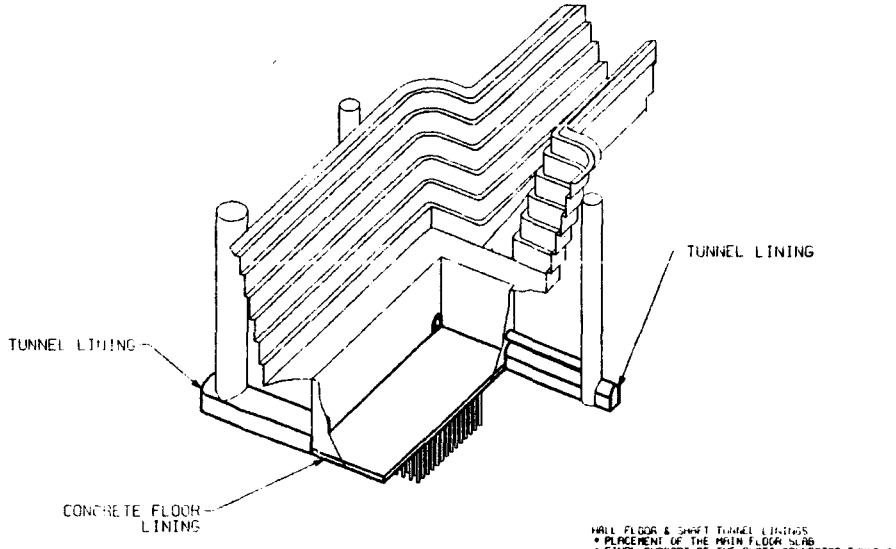


HALL FLOOR & SHAFT TUNNEL LININGS
* PLACEMENT OF THE MAIN FLOOR SLAB
* FINAL SUPPORT OF THE SHAFT CONNECTOR TUNNELS

STEP 5

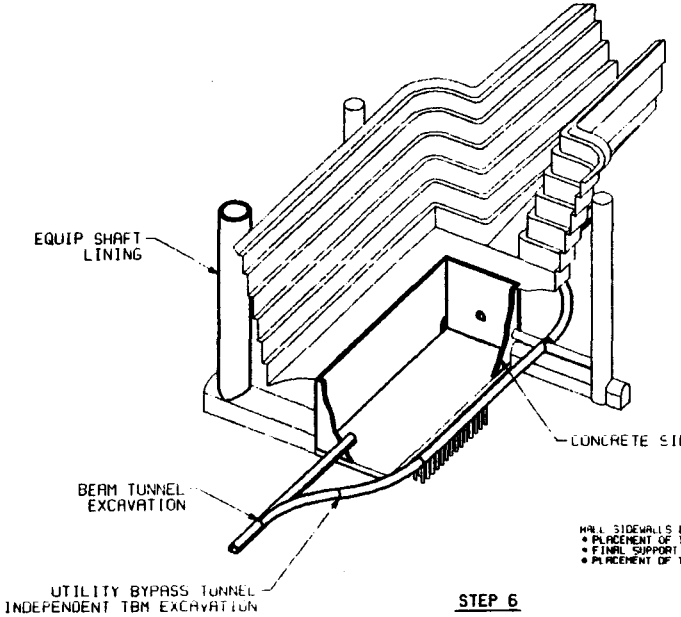


HALL SIDEWALLS & E SHAFT LINING
* PLACEMENT OF THE CONCRETE SIDEWALLS
* FINAL SUPPORT OF THE BEAM TUNNELS
* PLACEMENT OF THE LONG-TERM SHAFT LINING (EQUIPMENT )

STEP 6

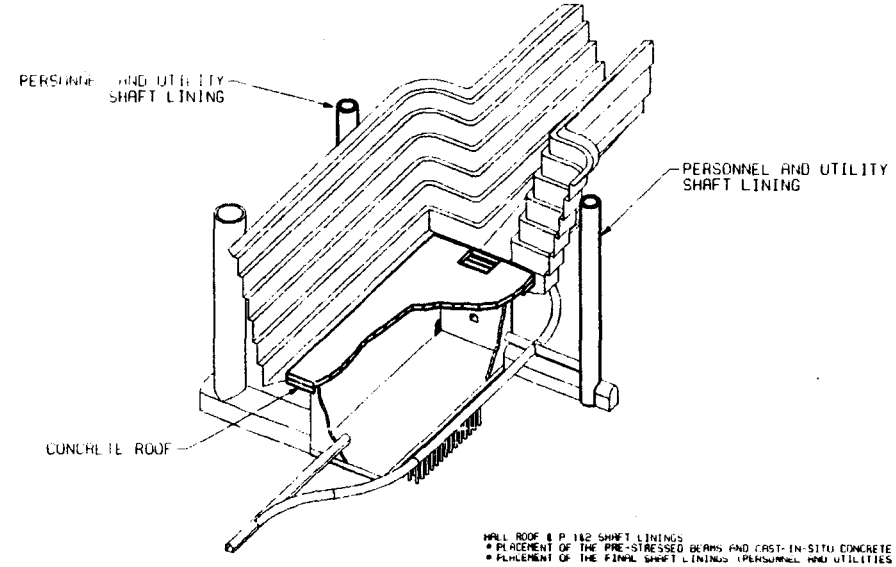


HALL ROOF & P 1&2 SHAFT LININGS
* PLACEMENT OF THE PRE-STRESSED BEAMS AND CAST-IN-SITU CONCRETE ROOF
* PLACEMENT OF THE FINAL SHAFT LININGS (PERSONNEL AND UTILITIES )

STEP 7

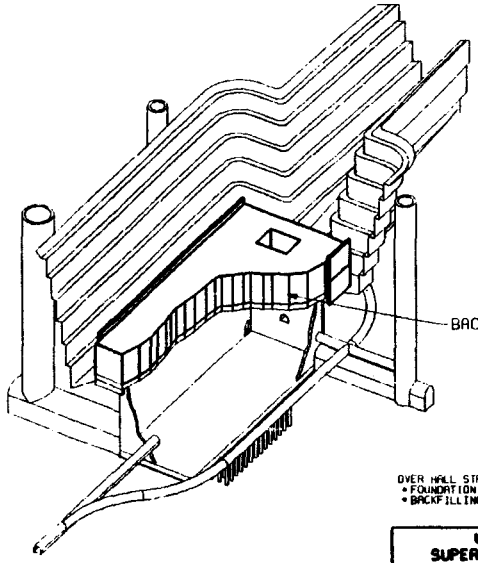


OVER HALL STRUCTURE FOUNDATIONS & BACKFILL
* FOUNDATION WORK FOR THE SUB-SURFACE STRUCTURE
* BACKFILLING ABOVE THE HALL ROOF

STEP 8

| NO | DATE | REVISION | BY/CHK | APP | APP | & DATE WRITTEN |
|---|---|---|---|---|---|---|
| 1 | 4/24/89 | REMOVE RAMP, RELOCATE EQUIP SHAFT | | | | |
| 0 | 3/30/89 | ISSUED FOR REVIEW | | | | |

REFERENCE DRAWINGS

NUMBER

1. HEAVY LINE WEIGHT INDICATES CURRENT EXCAVATION OR CONSTRUCTION

NOTES

| DESCRIPTION | COST ACCOUNT |
|---|---|
| WORK COVERED BY THIS ACCOUNT CHARGED TO COST ACCOUNT ABOVE | |

CONSTRUCTION APPROVAL

APPROVAL | DATE

SCALE: NO SCALE | DATE

DESIGN: C. LAUGHTON
DRAWN: A. NUNEZ / S. HAMILTON
CHECKED:
APPROVED:

PROFESSIONAL SEAL

U. S. DEPARTMENT OF ENERGY
SUPERCONDUCTING SUPER COLLIDER

SITE SPECIFIC CONCEPTUAL STUDY
EXPERIMENTAL HALLS AND DETECTORS CASE 5

K1 - LARGE SOLENOID DETECTOR HALL
CUT AND COVER CONSTRUCTION
STEPS 5 - 8

RBK & ASSOCIATES, INC.

URA/CDG

CONTRACT DE-AC02-85ER40230

PROJECT 85182

DRAWING K1S1-02 | DATE | REV 0 | DATE 4/24/89 | SHEET

261:(102,32256)-267.DGN NUNEZ 12-JUN-1990 08:04

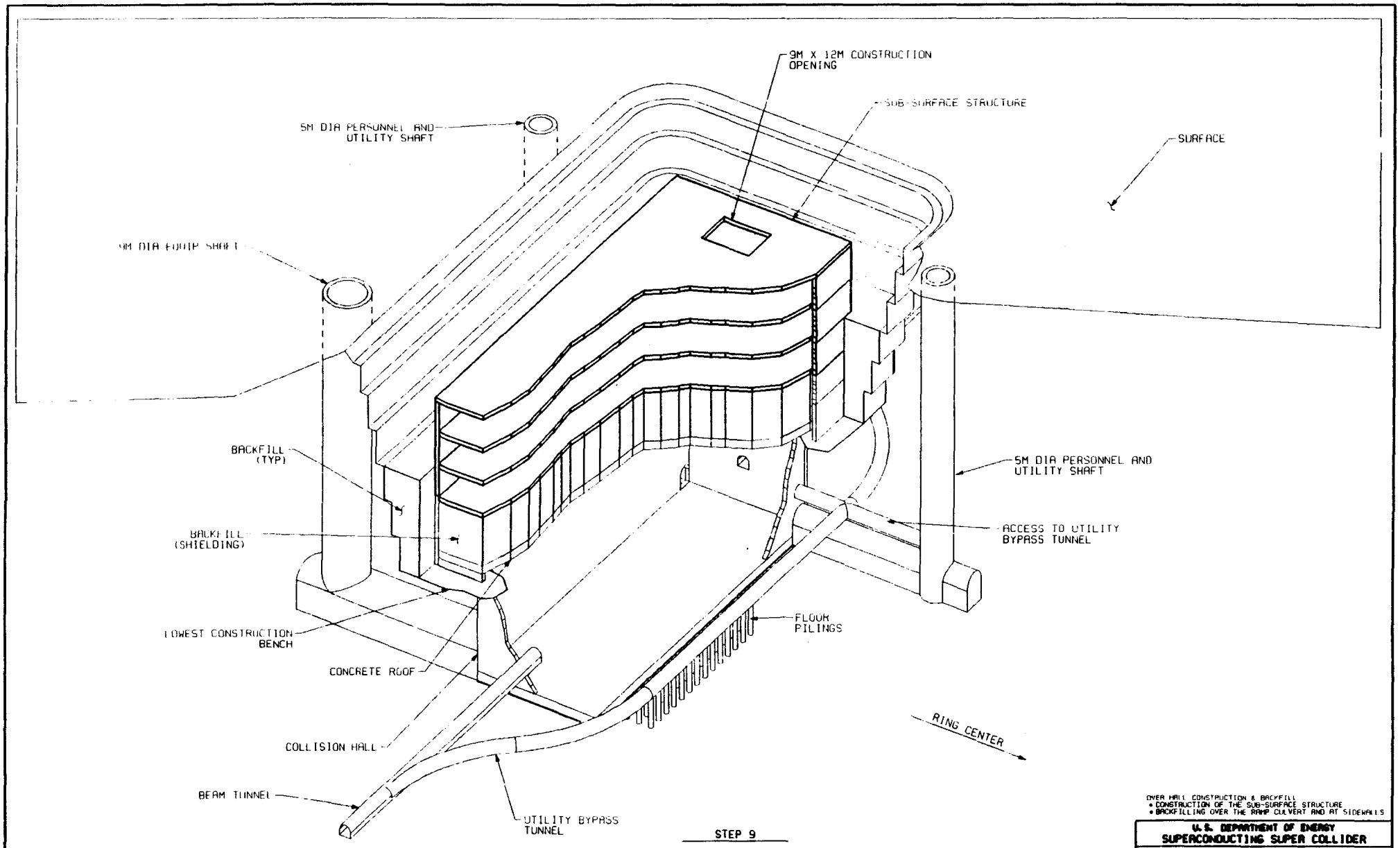


STEP 9

OVER HALL CONSTRUCTION & BACKFILL
- CONSTRUCTION OF THE SUB-SURFACE STRUCTURE
- BACKFILLING OVER THE RAMP CULVERT AND AT SIDEWALLS

**U.S. DEPARTMENT OF ENERGY**
**SUPERCONDUCTING SUPER COLLIDER**

**SITE SPECIFIC CONCEPTUAL STUDY**
**EXPERIMENTAL HALLS AND DETECTORS CASE 5**

K1 - LARGE SOLENOID DETECTOR HALL
CUT AND COVER CONSTRUCTION
STEP 9

| NO | DATE | REVISION | BY/CHK | APP | APP | REFERENCE DRAWINGS | NUMBER |
|---|---|---|---|---|---|---|---|
| 0 | 4/20/89 | REMOVE RAMP, RELOCATE EQUIP SHAFT, REDUCE SIZE OF SUPERSTRUCTURE | | | | | |
| A | 3/30/89 | ISSUED FOR REVIEW | | | | | |

NOTES: HEAVY LINE HEIGHT INDICATES CURRENT EXCAVATION OR CONSTRUCTION

DESCRIPTION — COST ACCOUNT
WORK COVERED BY THIS ACCOUNT CHARGED TO COST ACCOUNT ABOVE

CONSTRUCTION APPROVAL | APPROVAL | DATE

SCALE: NONE | DATE
DRAWN: C. LAUGHTON
CHECKED: A. NUNEZ / S. HAMILTON
PROFESSIONAL SEAL

RIK — Kaiser Engineers Inc. / Sverdrup Engineering Consultants / Kaiser & Sverdrup-Gilbert

URA/CDG

CONTRACT DE-AC02-85ER40230 | PROJECT 85122

DRAWING K1S1-03 | DATE ____ | REV 0 | DATE 4/24/89 | SHEET ____

Z6:(102,32)5000:000.DGN

NUNEZ
12-JUN-1989 08:07

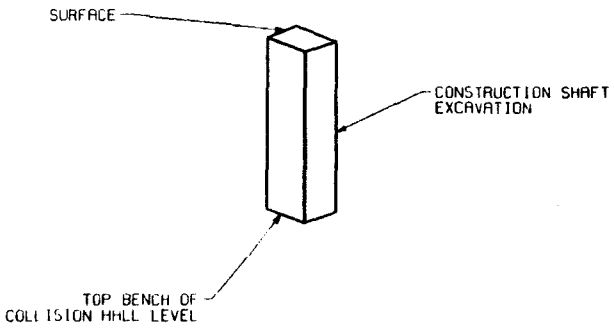


**STEP 1**

EXCAVATION OF SHAFT C1
- EXCAVATION CONSTRUCTION SHAFT C1 IN AC
- ENLARGEMENT AND REINFORCEMENT OF THE C1 CAVERN INTERSECTION ZONE

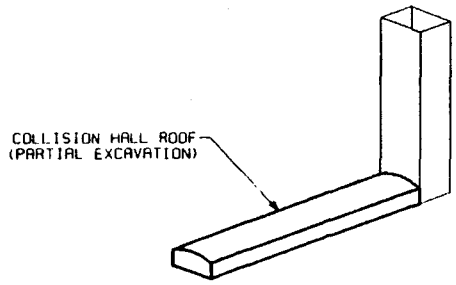


**STEP 2**

EXCAVATION OF THE CENTRAL CROWN DRIFTS
- EXCAVATION BY ROADHEADER OF THE CENTRAL ROOF DRIFTS

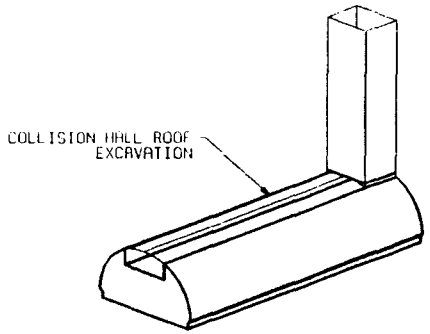


**STEP 3**

EXCAVATION OF THE ROOF TO GANTRY LEVEL AND DEVELOPMENT OF P1 SHAFT
- EXCAVATION OF THE THREE ROADHEADER BENCH LEVELS

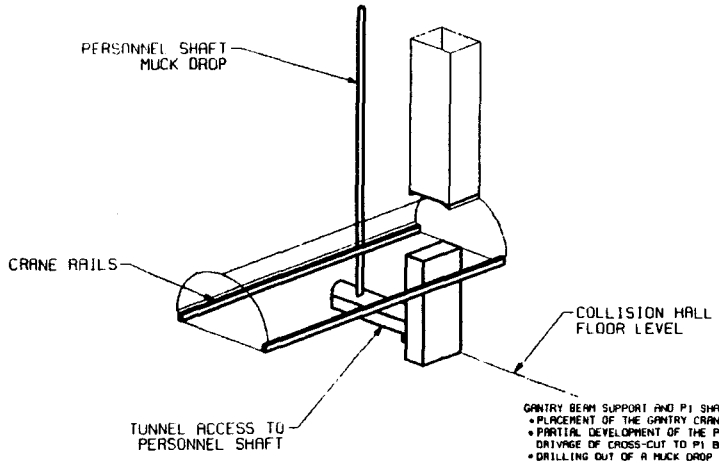


**STEP 4**

GANTRY BEAM SUPPORT AND P1 SHAFT DEVELOPMENT
- PLACEMENT OF THE GANTRY CRANE BEAMS
- PARTIAL DEVELOPMENT OF THE P1 SHAFT AND DRIVAGE OF CROSS-CUT TO P1 BASE
- DRILLING OUT OF A MUCK DROP WITHIN THE P1 SHAFT PROFILE

| NO | DATE | REVISION | BY | APP | APP | REFERENCE DRAWINGS | NUMBER |
|---|---|---|---|---|---|---|---|
| K | 5/18/90 | TEXT CHANGED | | | | | |
| R | 4/26/90 | TEXT CHANGED AND MODIFIED | | | | | |
| A | 3/30/90 | ISSUED FOR REVIEW | | | | | |

1. HEAVY LINE WEIGHT INDICATES CURRENT ACTIVITY

NOTES

| DESCRIPTION | COST ACCOUNT |
|---|---|
| WORK COVERED BY THIS RECORD CHARGED TO COST ACCOUNT ABOVE | |

CONSTRUCTION APPROVAL

| APPROVAL | DATE |
|---|---|
| | |

| | | DATE |
|---|---|---|
| SCALE | NO SCALE | |
| DRAWN | C. LAUGHTON | |
| CHECKED | R. NUNEZ | |
| APPROVED | | |

PROFESSIONAL SEAL

**U.S. DEPARTMENT OF ENERGY**
**SUPERCONDUCTING SUPER COLLIDER**

**SITE SPECIFIC CONCEPTUAL STUDY**
**EXPERIMENTAL HALLS AND DETECTORS CASE 5**

K1 - LARGE SOLENOID DETECTOR HALL CAVERN CONSTRUCTION STEPS 1-4

RTK

URA/CDG

CONTRACT DE-AC02-85ER40230

PROJECT 85122

DRAWING K1S2-01 DATE ____ REV K DATE 5/18/90 SHEET ____

Z&I (INC. 310750E04.DGN NUNEZ 12-JUN-1990 08:10

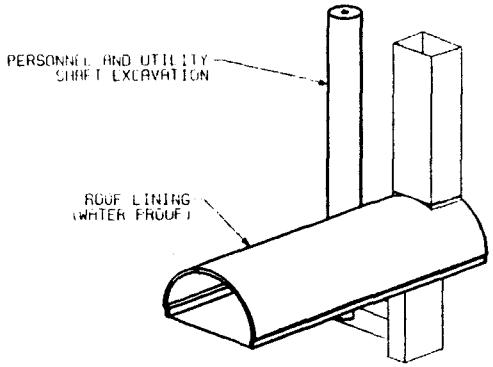


**STEP 5**

ROOF LINING, P1 EXCAVATION
- PLACEMENT OF THE CAST-IN-SITU ROOF LINING
- EXCAVATION TO FINAL PROFILE OF THE P1 SHAFT

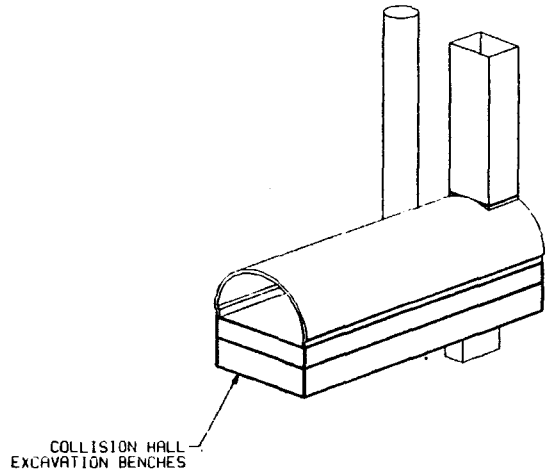


**STEP 6**

EXCAVATION OF HALL BENCHES (UPPER SECTION)
- EXCAVATION BY RIPPER OF THE HALL BENCHES (UPPER LEVELS)

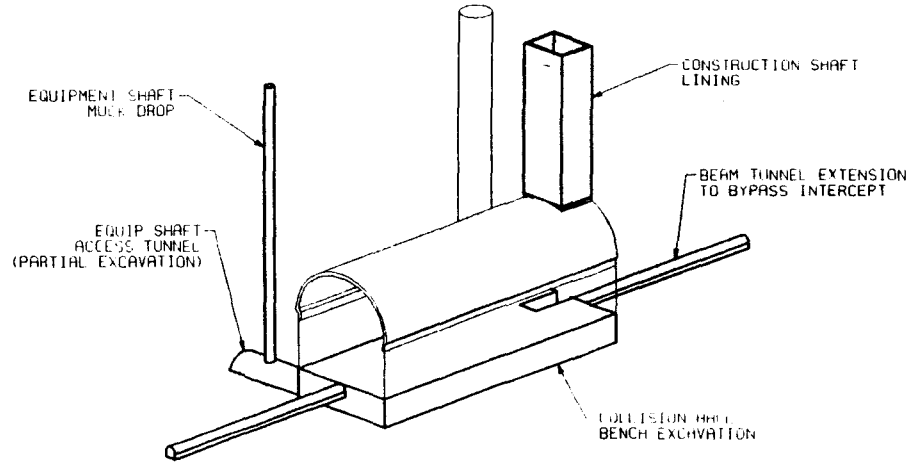


**STEP 7**

EXCAVATION OF HALL BENCHES (MIDDLE), SHAFT E1 & LINK-UP
- EXCAVATION BY RIPPER OF THE HALL BENCHES (MID. LEVELS)
- EXCAVATION BY ROADHEADER, OF THE E1 SHAFT TUNNEL (ROOF SECTION)
- EXCAVATION BY ROADHEADER OF THE BEAM TUNNELS
- DRILLING OUT OF THE E1 MUCK DROP
- C1 SHAFT LINING

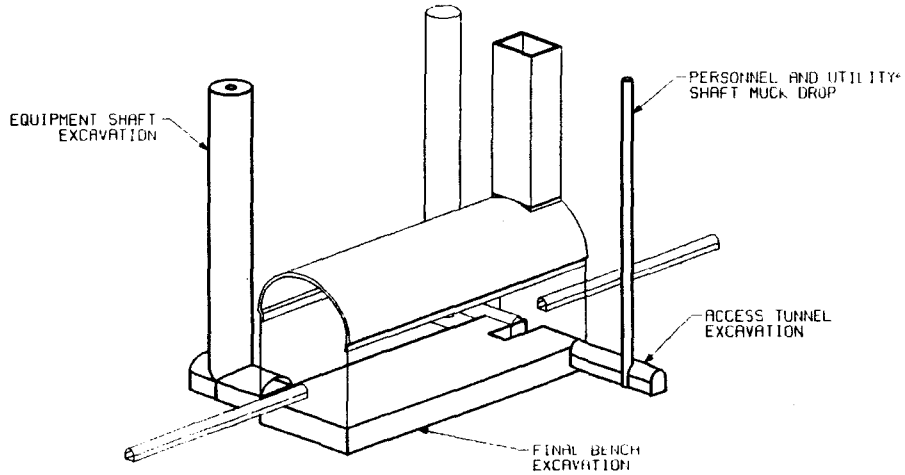


**STEP 8**

EXCAVATION OF HALL BENCH (LOWER), E1 P2 LINK-UPS
- EXCAVATION BY RIPPER OF THE HALL BENCHES (LOWER LEVELS) - SPECIAL ATTENTION PAID TO EFS
- EXCAVATION BY ROADHEADER OF THE E1 SHAFT TUNNEL (LOWER SECTION)
- EXCAVATION BY ROADHEADER OF THE P1&2 SHAFT TUNNELS
- EXCAVATION OF THE E1 SHAFT TO FINAL PROFILE
- DRILLING OF THE P2 MUCK DROP

| NO | DATE | REVISION | CHK | APP | TPP | DRAWN |
|---|---|---|---|---|---|---|
| 1 | 9/13/88 | TEXT CHANGED | | | | |
| 2 | 9/26/88 | TEXT CHANGED AND MOVED | | | | |
| 3 | 9/28/88 | ISSUED FOR REVIEW | | | | |

REFERENCE DRAWINGS | NUMBER

1. HEAVY LINE WEIGHT INDICATES CURRENT ACTIVITY

NOTES

DESCRIPTION | COST ACCOUNT
DRAW CHANGES BY THIS ACCOUNT
CHARGED TO CONT ACCOUNT ABOVE

CONSTRUCTION APPROVAL | APPROVAL | DATE

SCALE: NO SCALE | DATE
DRAWN: C. LAUGHTON
CHECKED: R. NUNEZ
APPROVED
APPROVED

PROFESSIONAL SEAL

U.S. DEPARTMENT OF ENERGY
SUPERCONDUCTING SUPER COLLIDER

SITE SPECIFIC CONCEPTUAL STUDY
EXPERIMENTAL HALLS AND DETECTORS CASE 5

K1 - LARGE SOLENOID DETECTOR HALL
CAVERN CONSTRUCTION
STEPS 5-8

RTK

URA/CDG

CONTRACT DE-AC02-85ER40230 | PROJECT 85122

DRAWING K1S2-02 | DATE ____ | REV 1 | DATE 5/10/89 | SHEET ____

Z:\: T1&2, 310750005.DWN
NUNEZ
12-JUN 1990 08:12

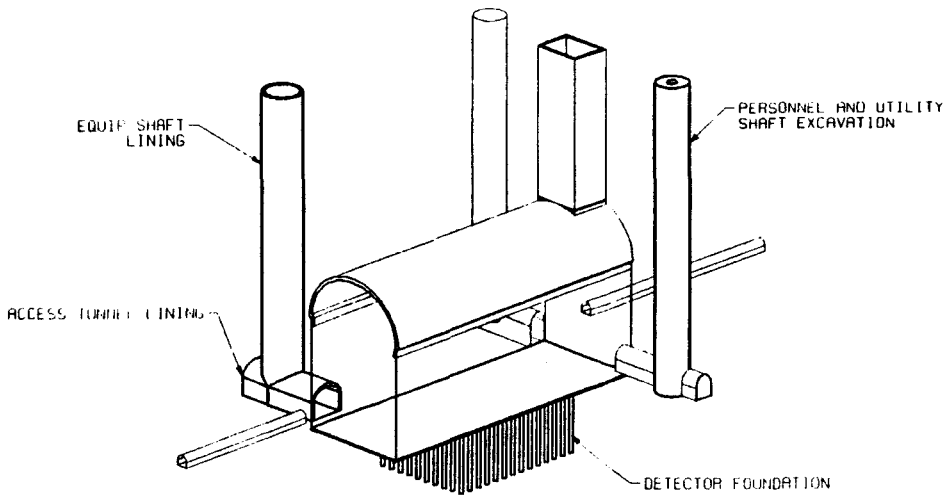


STEP 9

EXCAVATION OF P2, HALL FOUNDATION WORK & E1 LINING
- EXCAVATION OF THE P2 SHAFT
- FOUNDATION WORK (PILING) IN THE DETECTOR AREA - 15M DEEP, 1M DIA PILINGS ON A 3M x 3M GRID
- E1 CONNECTOR TUNNEL AND SHAFT LINING

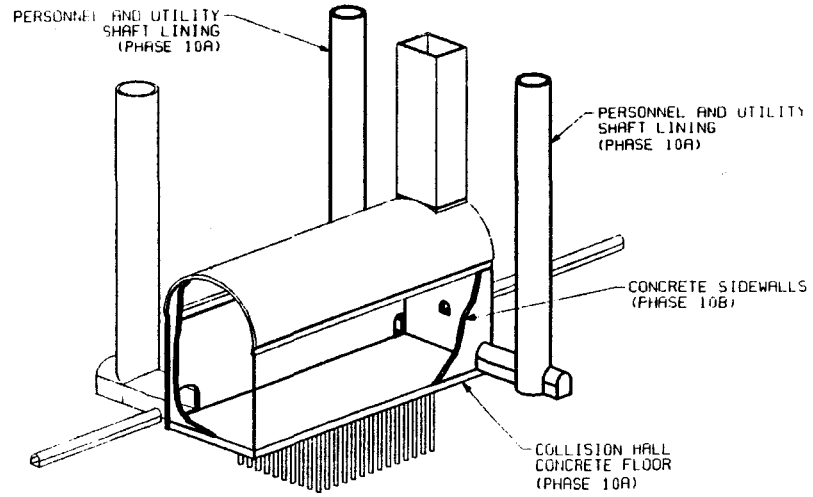


STEP 10A AND 10B

HALL LINING, P1&2 SHAFT LININGS
- P2 CONNECTOR TUNNEL AND SHAFT LINING
- PLACEMENT OF THE MAIN FLOOR SLAB

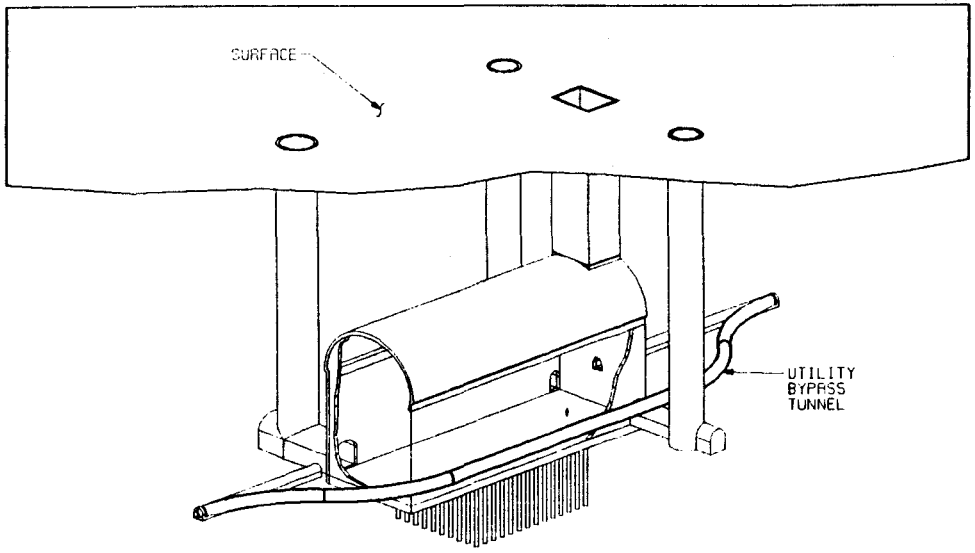


STEP 11

SURFACE REHABILITATION
- LANDSCAPING
- PERMANENT SITE INSTALLATIONS

| NO | DATE | REVISION | BY | CHK | APP | APP | REFERENCE DRAWINGS | NUMBER |
|---|---|---|---|---|---|---|---|---|
| A | 3/18/89 | TEXT ADDED | | | | | | |
| B | 4/26/89 | TEXT ADDED | | | | | | |
| C | 5/31/89 | ISSUED FOR REVIEW | | | | | | |

1. HEAVY LINE WEIGHT INDICATES CURRENT ACTIVITY

NOTES

DESCRIPTION — COST ACCOUNT
WORK COVERED BY THIS ACCOUNT — CHARGED TO COST ACCOUNT ABOVE

CONSTRUCTION APPROVAL

APPROVAL — DATE

SCALE: NO SCALE — DATE
DESIGNED: C. LAUGHTON
DRAWN: R. NUNEZ
CHECKED:
APPROVED:

PROFESSIONAL SEAL

U.S. DEPARTMENT OF ENERGY
SUPERCONDUCTING SUPER COLLIDER

SITE SPECIFIC CONCEPTUAL STUDY
EXPERIMENTAL HALLS AND DETECTORS CASE 5

K1 - LARGE SOLENOID DETECTOR HALL
CAVERN CONSTRUCTION
STEPS 9-11

RTK — URA/CDG

CONTRACT DE-AC02-85ER40230 — PROJECT 85122

DRAWING K1S2-03 — DATE ____ — REV C — DATE 5/10/89 — SHEET ____

26L:[102.3307500208.DGN] NUNEZ 12-JUN-1989 08:16

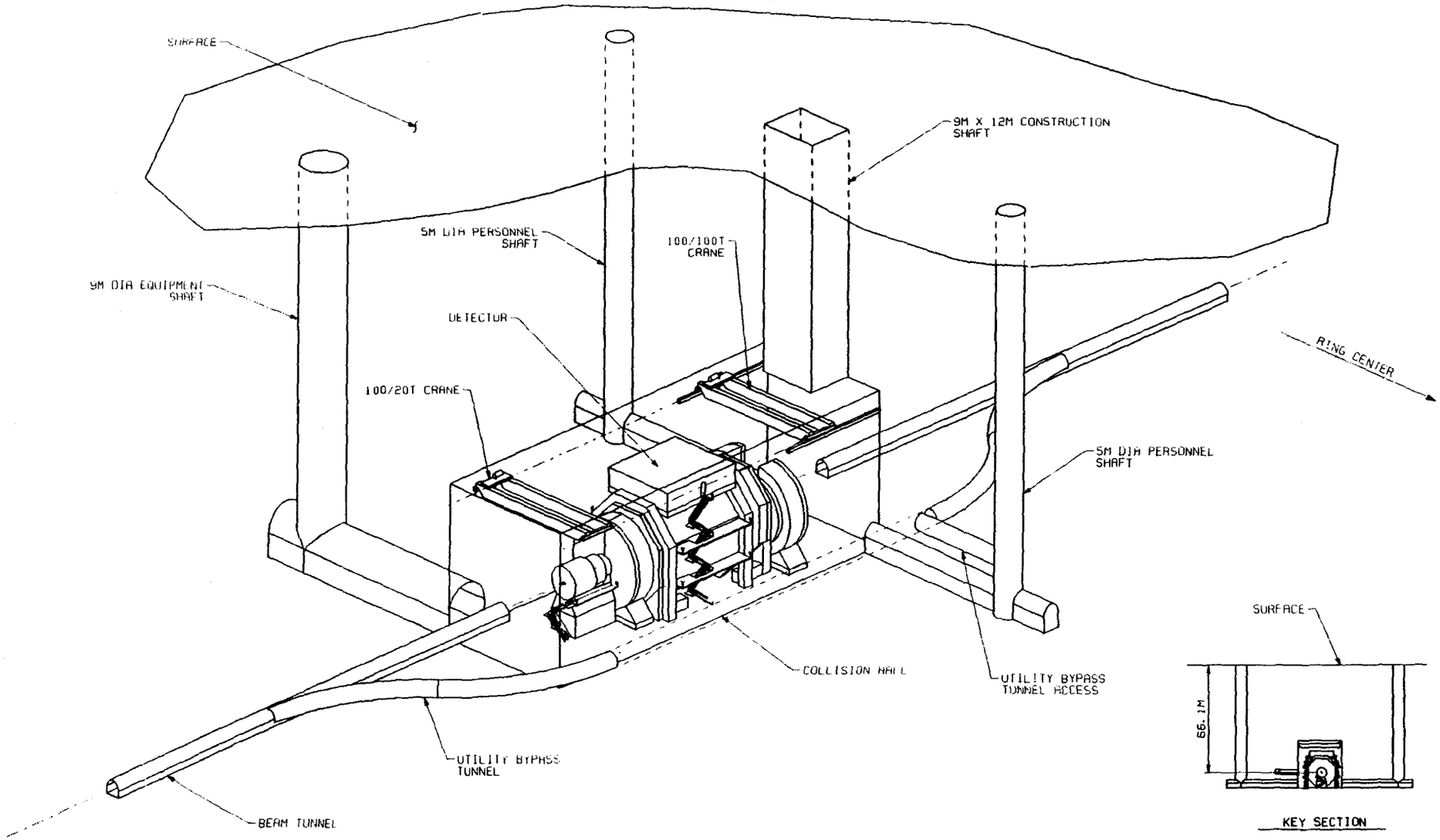


ISOMETRIC




KEY SECTION

U.S. DEPARTMENT OF ENERGY
SUPERCONDUCTING SUPER COLLIDER

SITE SPECIFIC CONCEPTUAL STUDY
EXPERIMENTAL HALLS AND DETECTORS CASE 5

K1 - LARGE SOLENOID DETECTOR
FINISHED HALL
ISOMETRIC AND KEY SECTION

| NO | DATE | REVISION | APP | REFERENCE DRAWINGS | NUMBER | NOTES |
|---|---|---|---|---|---|---|
| | 1/1/89 | TEXT REVISED | | | | |
| | 9/26/88 | UNDERGROUND RAMP ELIMINATED | | | | |
| | | SHAFT RELOCATED OUTSIDE RING | | | | |
| | 3/24/88 | ISSUED FOR REVIEW | | | | |

DESCRIPTION COST RECORD
WORK COVERED BY THIS REPORT CHARGED TO COST ACCOUNT ABOVE

CONSTRUCTION APPROVAL

APPROVAL DATE

SCALE NO SCALE
DESIGNED V. TERRY
DRAWN R. NUNEZ
CHECKED
APPROVED
APPROVED

DATE

PROFESSIONAL SEAL

URA/CDG

CONTRACT DE-AC02-85ER40230

PROJECT 05122

DRAWING K1-01 DATE REV. C DATE 5/10/89 SHEET

261( (162,3125600283.DGN SHEET 12-JUN-1989 08:21

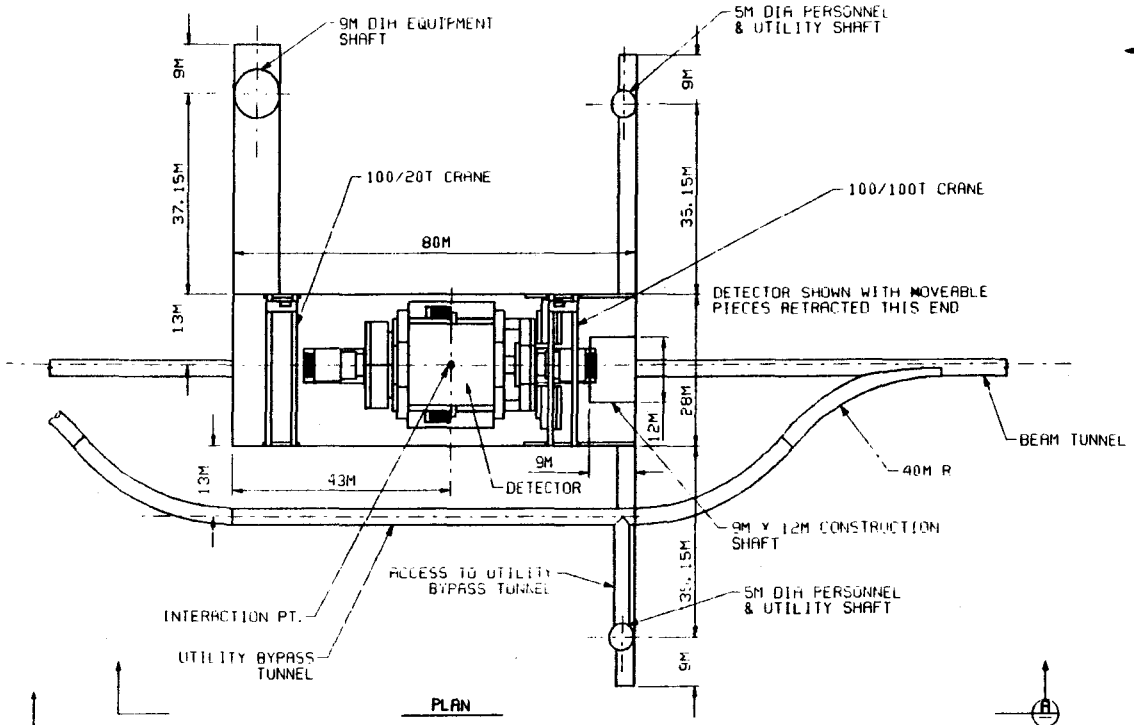


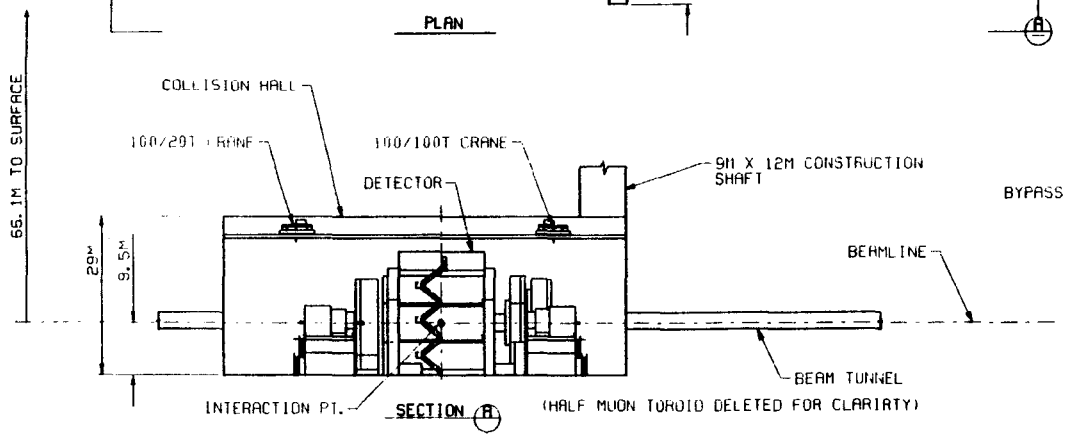


EQUIPMENT, PERSONNEL SHAFTS & UTILITY BYPASS TUNNEL DELETED FOR CLARITY

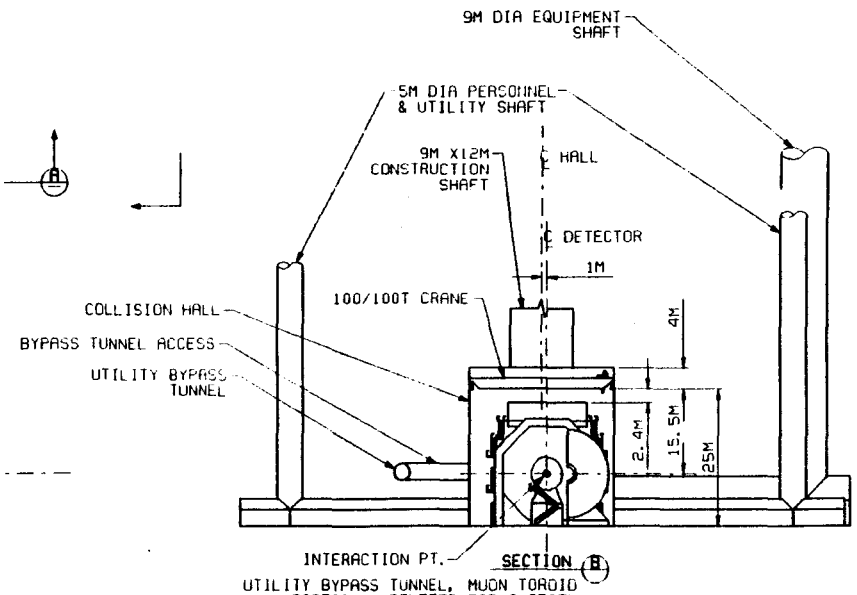


UTILITY BYPASS TUNNEL, MUON TOROID PARTIALLY DELETED FOR CLARITY

1:400 SCALE

U.S. DEPARTMENT OF ENERGY
SUPERCONDUCTING SUPER COLLIDER

SITE SPECIFIC CONCEPTUAL STUDY
EXPERIMENTAL HALLS AND DETECTORS CASE 5

K1 - LARGE SOLENOID DETECTOR
FINISHED HALL
PLAN AND SECTIONS

URA/CDG

CONTRACT DE-AC02-85ER40230 | PROJECT 85122

DRAWING K1-02 | DATE | REV B | DATE 4/24/89 | SHEET

| No. | DATE | REVISION | REFERENCE DRAWINGS | NUMBER | NOTES |
|---|---|---|---|---|---|
| 3 | 4/24/89 | UNDERGROUND RAMP ELIMINATED | | | |
| 2 | | EQUIP SHAFT RELOCATED OUTSIDE RING | | | |
| 1 | 7/28/88 | ISSUED FOR REVIEW | | | |

DESCRIPTION — COST ACCOUNT
WORK CARRIED BY THIS ACCOUNT CHARGED TO COST ACCOUNT ABOVE

CONSTRUCTION APPROVAL | APPROVAL | DATE | SCALE 1:400 | DATE | PROFESSIONAL SEAL

DESIGNED W. TERRY
DRAWN R. NUNEZ

261 (182,332)6500204.DGN NUNEZ 12-JUN 1996 08:25

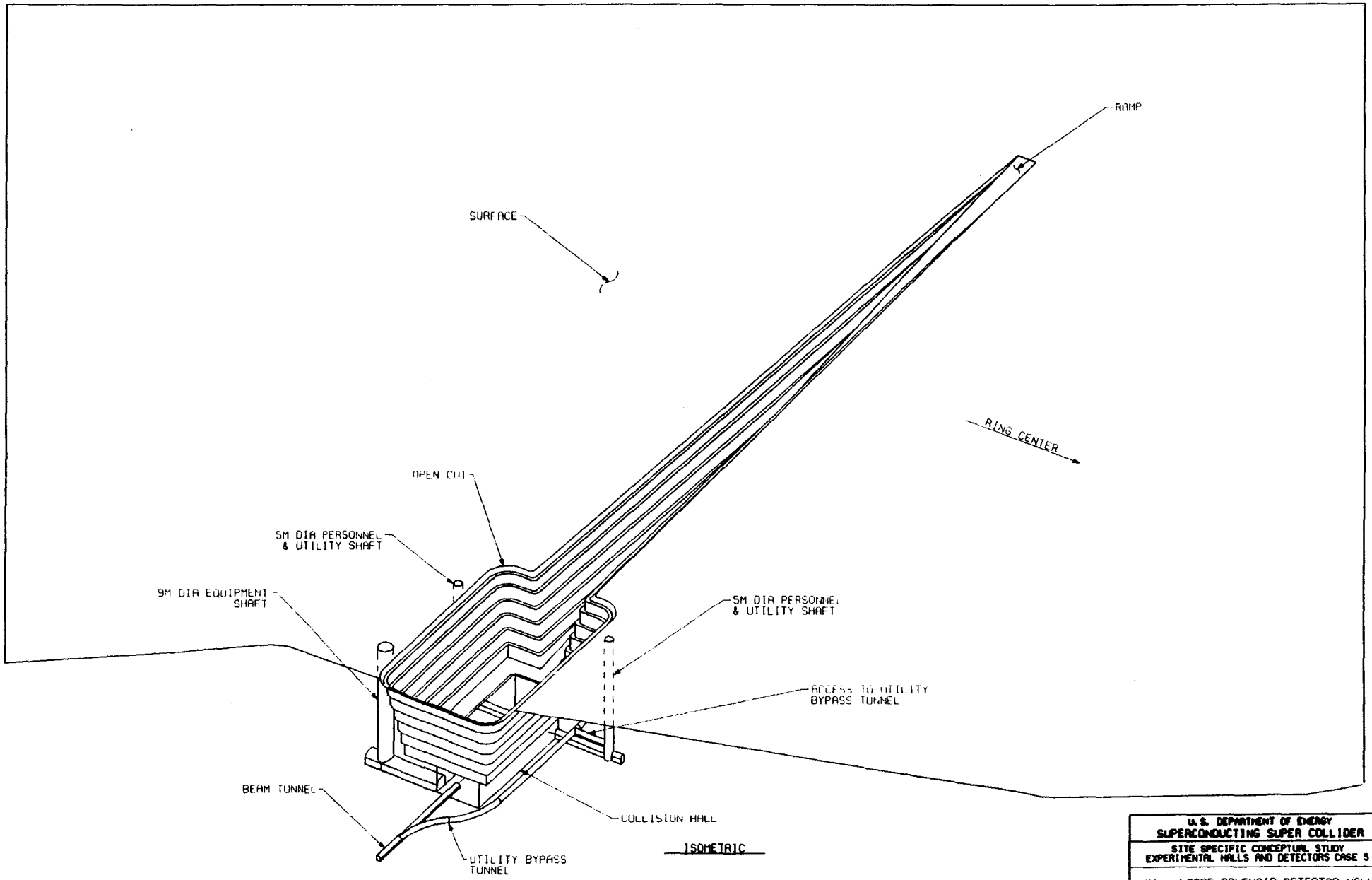


| NO | DATE | REVISION | BY | APP | APP | K.W. |
|---|---|---|---|---|---|---|
| | 9/19/89 | TEXT REVISED | | | | |
| | 8/24/89 | EQUIPMENT SHAFT RELOCATED TO OUTSIDE RING | | | | |
| | | UNDERGROUND RAMP REMOVED | | | | |
| A | 8/24/89 | ISSUED FOR REVIEW | | | | |

REFERENCE DRAWINGS | NUMBER | NOTES

DESCRIPTION | COST ACCOUNT
ZONE COVERED BY THIS ACCOUNT
CHARGED TO COST ACCOUNT ABOVE

CONSTRUCTION APPROVAL | APPROVAL | DATE | DATE | PROFESSIONAL SEAL

SCALE: NONE
DRAWN: C. LAUGHTON
CHECKED: A. NUNEZ
APPROVED:
APPROVED:

U.S. DEPARTMENT OF ENERGY
SUPERCONDUCTING SUPER COLLIDER

SITE SPECIFIC CONCEPTUAL STUDY
EXPERIMENTAL HALLS AND DETECTORS CASE 5

K1 - LARGE SOLENOID DETECTOR HALL
CUT AND COVER CONSTRUCTION
ISOMETRIC

URA/CDG

CONTRACT DE-AC02-85ER40230 | PROJECT 85122

DRAWING K1-03 | DATE | REV C | DATE 5/10/89 | SHEET

Z61 (1 02, 3025040230L DGN
NUNEZ
12-JUN-1989 08:29

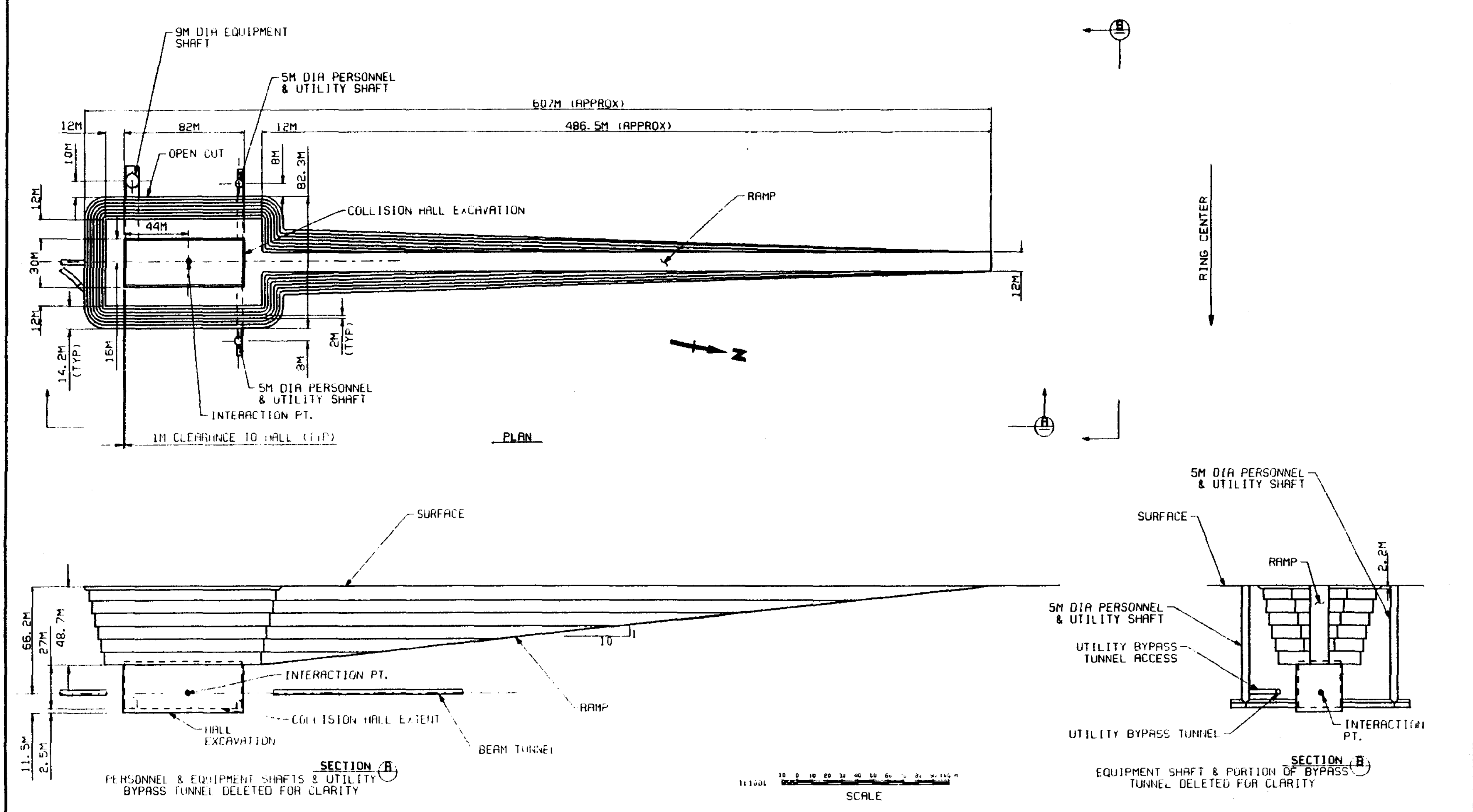


| NO | DATE | REVISION |
|---|---|---|
| C | 5/10/88 | TEXT REVISED |
| B | 4/26/88 | UNDERGROUND RAMP REMOVED |
| | | EQUIP SHAFT RELOCATED OUTSIDE RING |
| A | 3/8/88 | ISSUED FOR REVIEW |

SCALE: 1:1000
C. LAUGHTON
R. NUNEZ

U.S. DEPARTMENT OF ENERGY
SUPERCONDUCTING SUPER COLLIDER

SITE SPECIFIC CONCEPTUAL STUDY
EXPERIMENTAL HALLS AND DETECTORS CASE 5

K1 - LARGE SOLENOID DETECTOR
CUT AND COVER CONSTRUCTION
PLAN AND SECTIONS

RBK
URA/CDG

CONTRACT DE-AC02-85ER40230 | PROJECT 85122
DRAWING K1-04 | REV C | DATE 5/10/88 | SHEET

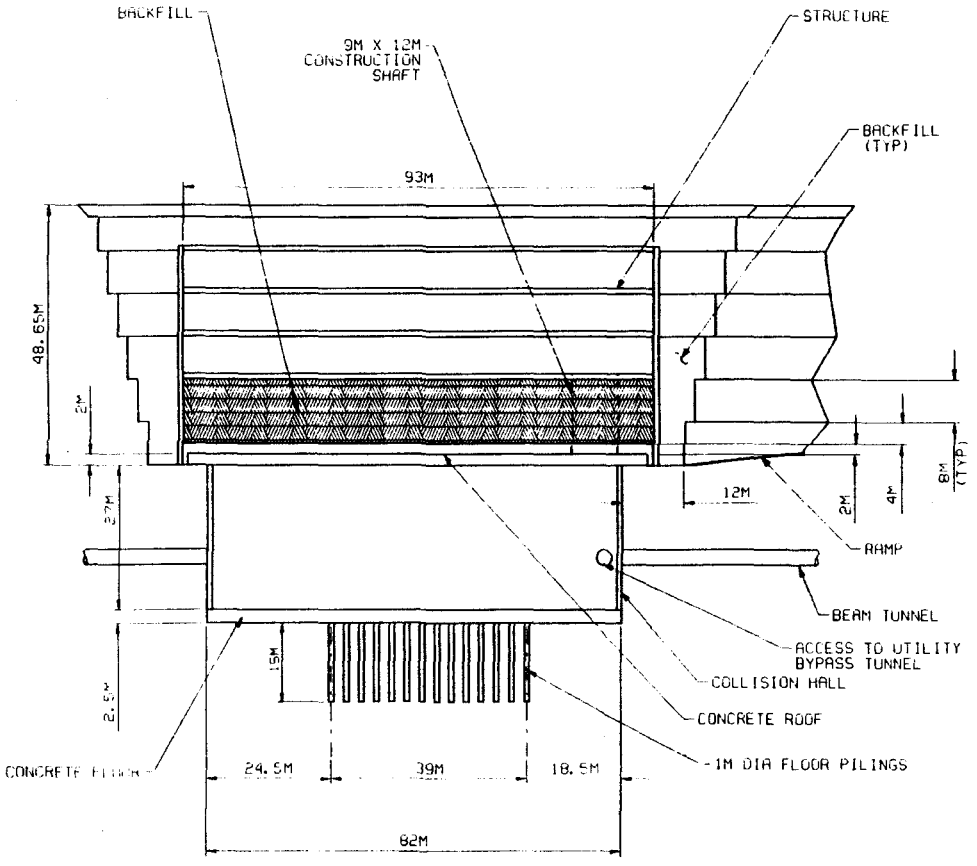


**ELEVATION**

PERSONNEL AND EQUIP SHAFTS AND BYPASS TUNNEL DELETED FOR CLARITY

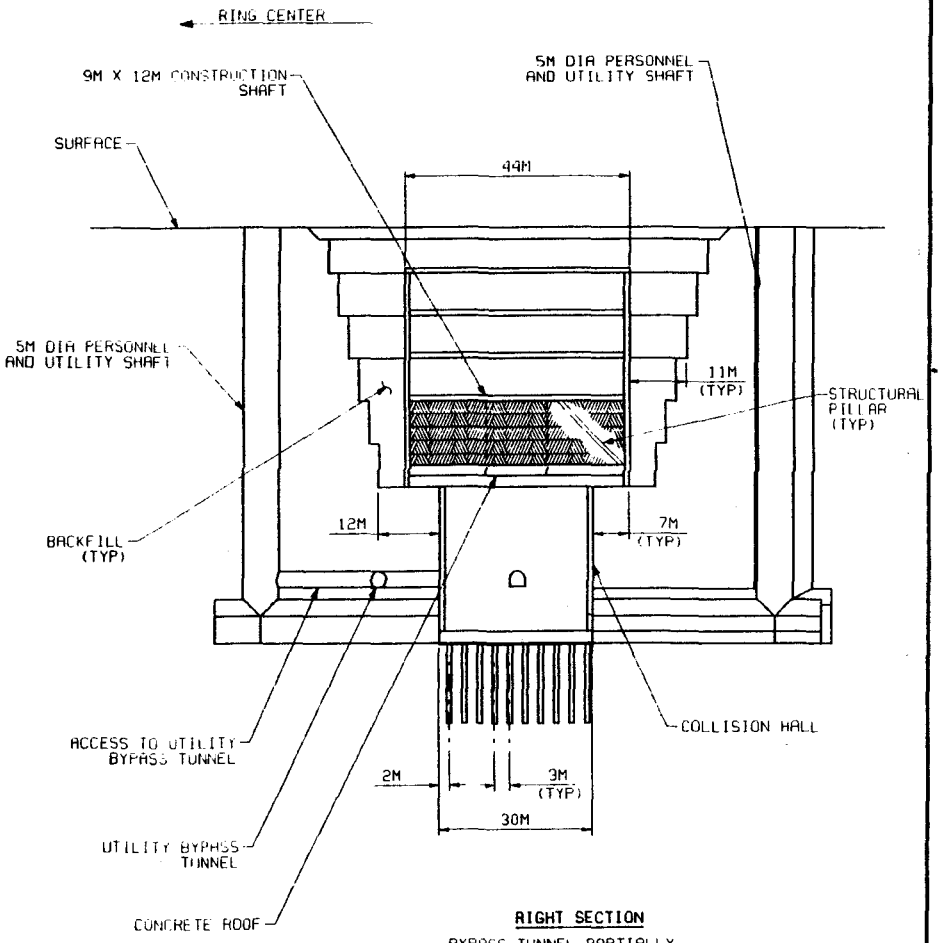


**RIGHT SECTION**

BYPASS TUNNEL PARTIALLY DELETED FOR CLARITY

1:400 10 0 10 20 30 40 50 M

SCALE

| NO | DATE | REVISION | BY | CHK | APP | APP | REFERENCE DRAWINGS | NUMBER | NOTES |
|---|---|---|---|---|---|---|---|---|---|
| C | 5/10/88 | TEXT | | | | | | | |
| B | 4/04/88 | REMOVE RAMP, RELOCATE EQUIP SHAFT, REDUCE SIZE OF SUPERSTRUCTURE | | | | | | | |
| A | 3/28/88 | ISSUED FOR REVIEW | | | | | | | |

DESCRIPTION — COST ACCOUNT — WORK DEFINED BY THIS ACCOUNT — CHARGED TO COST ACCOUNT ABOVE

CONSTRUCTION APPROVAL — APPROVAL — DATE — SCALE 1:400 — DATE — PROFESSIONAL SEAL

DESIGNED C. LAUGHTON
DRAWN R. NUNEZ / G. HAMILTON
CHECKED
APPROVED
APPROVED

U.S. DEPARTMENT OF ENERGY
SUPERCONDUCTING SUPER COLLIDER

SITE SPECIFIC CONCEPTUAL STUDY
EXPERIMENTAL HALLS AND DETECTORS CASE 5

K1 - LARGE SOLENOID DETECTOR HALL
CUT AND COVER CONSTRUCTION
FINISHED HALL

RTK — URA/CDG

CONTRACT DE-AC02-85ER40230 — PROJECT 65122

DRAWING K1-05 — DATE — REV C DATE 5/10/88 — SHEET

Z64: (1182,3)25550209.DGN

NUNEZ
12-JUN-1989 08:36

TABLE OF WEIGHTS

| COMPONENT | WEIGHT/MT | NO. | TOTAL/MT |
|---|---|---|---|
| FWD TRACKING, FWD CALORIMETER, FWD TOROID | 1760 | 2 | 3520 |
| INTERMEDIATE MUON TOROID (HALF) | 2500 | 4 | 10000 |
| END CAP (FLUX, CALORIMETER, MUON TRACK) | 3500 | 2 | 7000 |
| IRON FLUX RETURN, MUON TRACKING & SUPPORT | 12000 | 1 | 12000 |
| COIL | 900 | 1 | 900 |
| CENTRAL CALORIMETER | 5000 | 1 | 5000 |
| TRACKING | 2 | 1 | 2 |
| | | | 38422 |

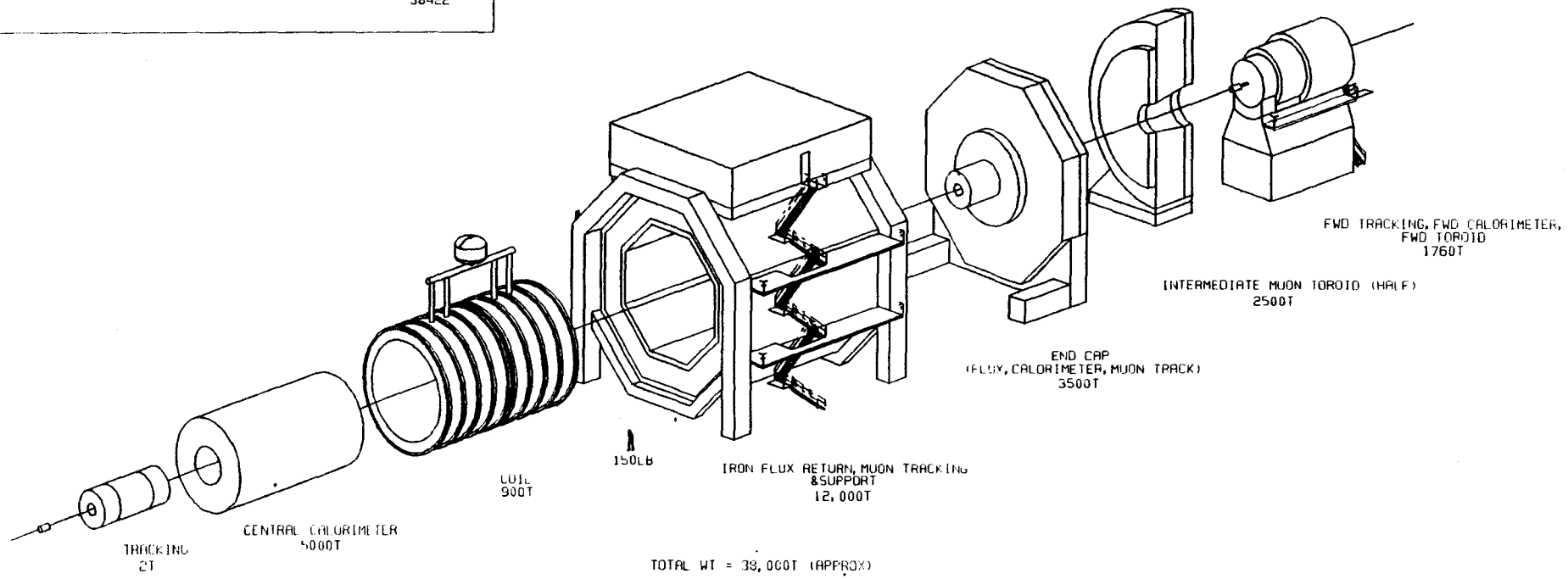


TOTAL WT = 38,000T (APPROX)

U.S. DEPARTMENT OF ENERGY
SUPERCONDUCTING SUPER COLLIDER

SITE SPECIFIC CONCEPTUAL STUDY
EXPERIMENTAL HALLS AND DETECTORS CASE 5

K1 - LARGE SOLENOID DETECTOR MODEL
EXPLODED VIEW

RTK

URA/CDG

CONTRACT DE-AC02-85ER40230

PROJECT 85122

DRAWING K1-06

DATE

REV B

DATE 5/18/88

SHEET

| NO | DATE | REVISION | BY/CHK | APP | APP | SIMILAR USED ON |
|---|---|---|---|---|---|---|
| B | 5/18/88 | EQUIPMENT NAMES AND WEIGHTS UPDATED | | | | |
| A | 3/30/88 | ISSUED FOR REVIEW | | | | |

REFERENCE DRAWINGS | NUMBER | NOTES

DESCRIPTION | COST ACCOUNT
WORK OVERSEE BY THE ROSSOFF
CHARGED TO COST ACCOUNT ABOVE

CONSTRUCTION APPROVAL

APPROVAL | DATE

SCALE NONE
DESIGNED W. TERRY
DR.
DRAWN W. TERRY
CK.
CHECKED
DR.
APPROVED
DR.
APPROVED
DR.

DATE

PROFESSIONAL SEAL

Z61 (182.3301500209.DGN) NUMEI 12-JUN-1990 09:40

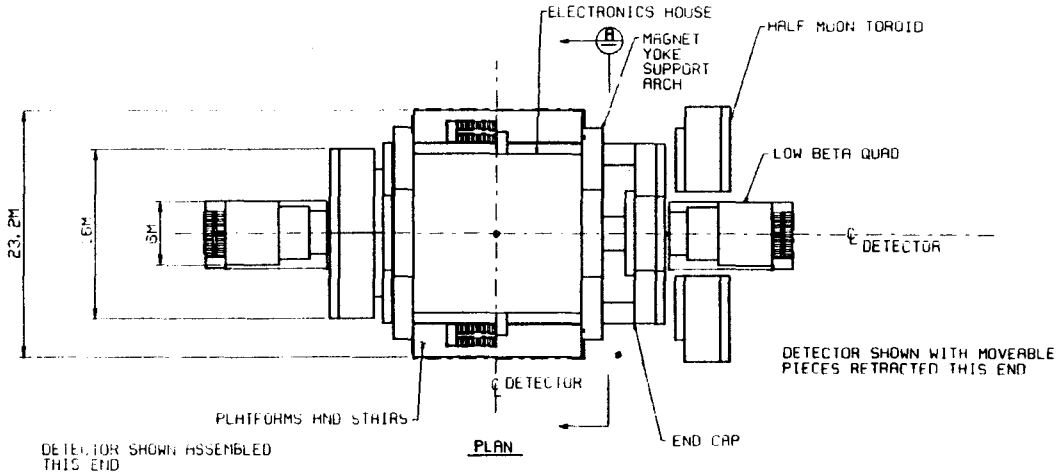


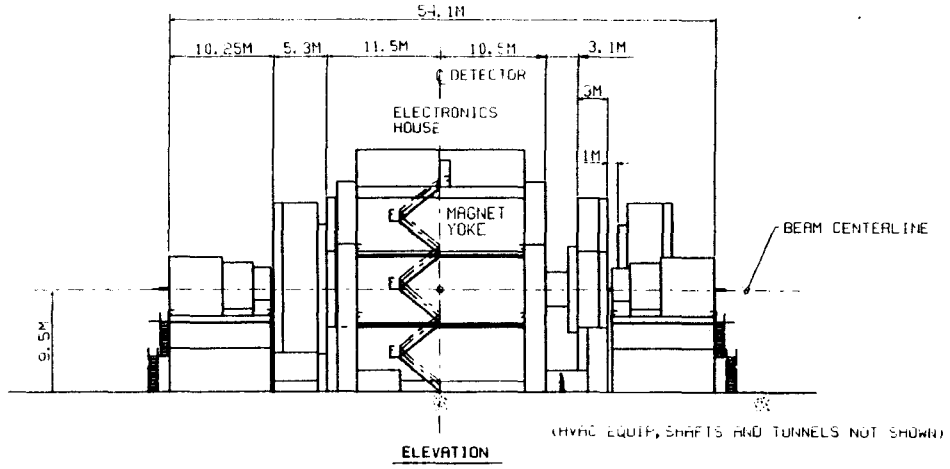


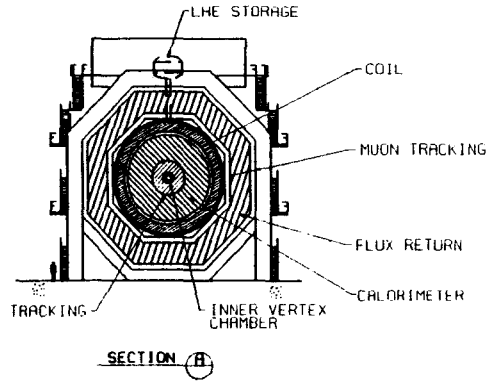


U.S. DEPARTMENT OF ENERGY
SUPERCONDUCTING SUPER COLLIDER

SITE SPECIFIC CONCEPTUAL STUDY
EXPERIMENTAL HALLS AND DETECTORS CASE 5

K1 - LARGE SOLENOID DETECTOR
GENERAL ARRANGEMENT - PLAN & SECTION

| NO | DATE | REVISION | REV BY | APP | REV & APP | REFERENCE DRAWINGS | NUMBER |
|---|---|---|---|---|---|---|---|
| B | 5/10/89 | EQUIPMENT NAMES UPDATED | | | | | |
| A | 3/20/89 | ISSUED FOR REVIEW | | | | | |

DESCRIPTION | COST ACCOUNT
WORK COVERED BY THIS ACCOUNT CHARGED TO COST ACCOUNT ABOVE

CONSTRUCTION APPROVAL | APPROVAL | DATE | PROFESSIONAL SEAL

SCALE 1:230
DRAWN M. TERRY
CHECKED M. TERRY

URA/CDG
CONTRACT DE-AC02-85ER40230
PROJECT 85122
DRAWING K1-07 | DATE | REV B DATE 5/10/89 | SHEET

Z61:T18Z,J01503207.DGN
NUMEZ
12-JUN-1989 08:52

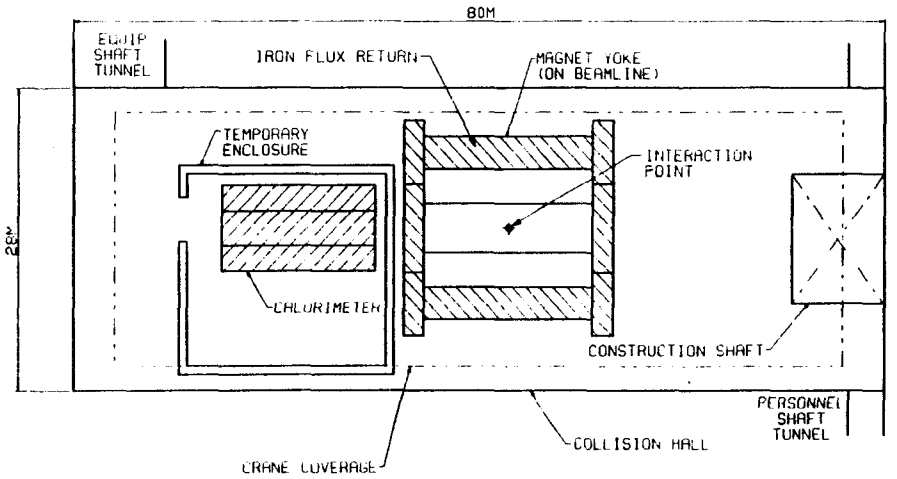


**PLAN - ASSEMBLY STEP 1**

ASSEMBLE FLUX RETURN

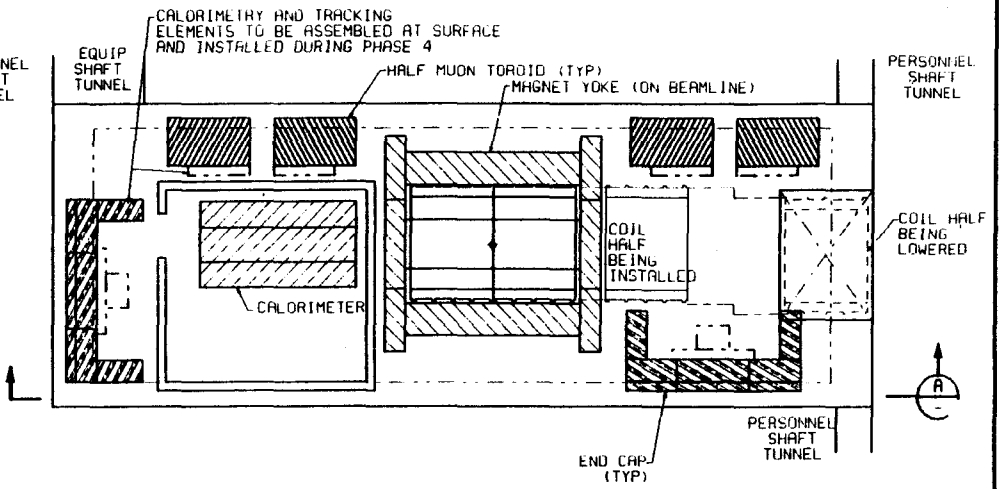


**PLAN - ASSEMBLY STEP 2**

ASSEMBLE ENDCAPS AND TOROIDS, INSTALL COIL

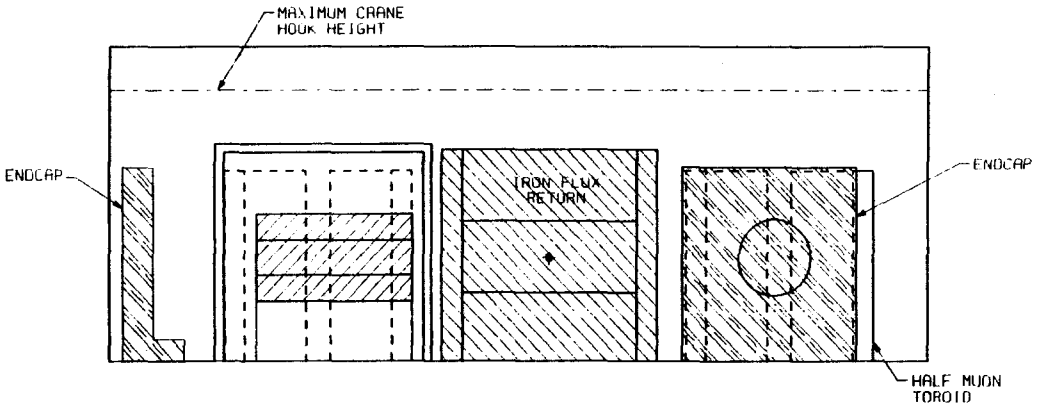


**SECTION A**

| NO | DATE | REVISION | | APP | APP | DWN | REFERENCE DRAWINGS | NUMBER | NOTES |
|---|---|---|---|---|---|---|---|---|---|
| C | 5/18/88 | TEXT CHANGES | | | | | | | 1. CROSS HATCHING INDICATES COMPONENT UNDER CONSTRUCTION |
| B | 4/24/88 | SECTION VIEW ADDED | | | | | | | |
| A | 3/30/88 | ISSUED FOR REVIEW | | | | | | | |

DESCRIPTION — COST ACCOUNT
WORK COVERED BY THIS ACCOUNT CHARGED TO COST ACCOUNT ABOVE

CONSTRUCTION APPROVAL | APPROVAL | DATE | PROFESSIONAL SEAL

SCALE 1:200 | DATE
DRAWN W. TERRY
CHECKED W. TERRY

U.S. DEPARTMENT OF ENERGY
SUPERCONDUCTING SUPER COLLIDER

SITE SPECIFIC CONCEPTUAL STUDY
EXPERIMENTAL HALLS AND DETECTORS CASE 5

K1 - LARGE SOLENOID DETECTOR
DETECTOR ASSEMBLY - STEPS 1 AND 2

RTK — URA/CDG

CONTRACT DE-AC02-85ER40230 | PROJECT 85122

DRAWING K1-08 | DATE | REV. C DATE 5/10/88 | SHEET

Z61:[102.3]01500206.DGN
NUNEZ
12-JUN-1990 08:50

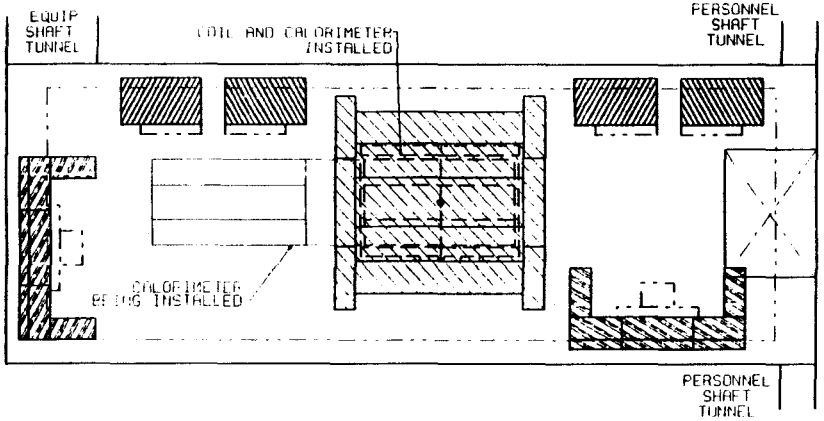


PLAN - ASSEMBLY STEP 3

INSTALL AND ALIGN MUON CHAMBERS
INSTALL CALORIMETER

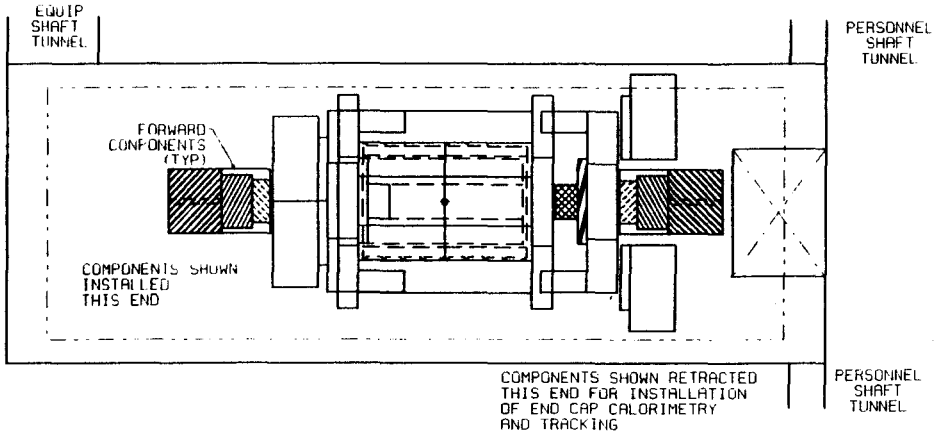


PLAN - ASSEMBLY STEP 4

MOVE COMPLETED COMPONENTS IN PLACE
ASSEMBLE FORWARD COMPONENTS
INSTALL END CAP CALORIMETRY AND TRACKING
INSTALL MUON TRACKING

| NO | DATE | REVISION | BY | CHK | APP | REV WORK | ALTERNATE DRAWINGS | NUMBER |
|---|---|---|---|---|---|---|---|---|
| | 5/18/89 | TEXT CHANGES | | | | | | |
| | 4/24/89 | RELOCATE EQUIPMENT SHAFT | | | | | | |
| | 3/30/89 | ISSUED FOR REVIEW | | | | | | |

NOTES: CROSS HATCHING INDICATES COMPONENT UNDER CONSTRUCTION

| DESCRIPTION | COST ACCOUNT |
|---|---|
| WORK COVERED BY THIS ACCOUNT CHARGED TO COST ACCOUNT ABOVE | |

CONSTRUCTION APPROVAL | APPROVAL | DATE | DATE | PROFESSIONAL SEAL

SCALE 1:200
DESIGNED W. TERRY
DRAWN W. TERRY
CHECKED
APPROVED
APPROVED

U.S. DEPARTMENT OF ENERGY
SUPERCONDUCTING SUPER COLLIDER

SITE SPECIFIC CONCEPTUAL STUDY
EXPERIMENTAL HALLS AND DETECTORS CASE 5

K1 - LARGE SOLENOID DETECTOR
DETECTOR ASSEMBLY - STEPS 3 AND 4

RTK

URA/CDG

CONTRACT DE-AC02-85ER40230

PROJECT 05122

DRAWING K1-09 DATE ____ REV ____ DATE 5/18/89 SHEET ____

Z61: (192,330150021 4.DGN NAMEZ 12-JUN-1989 09:00

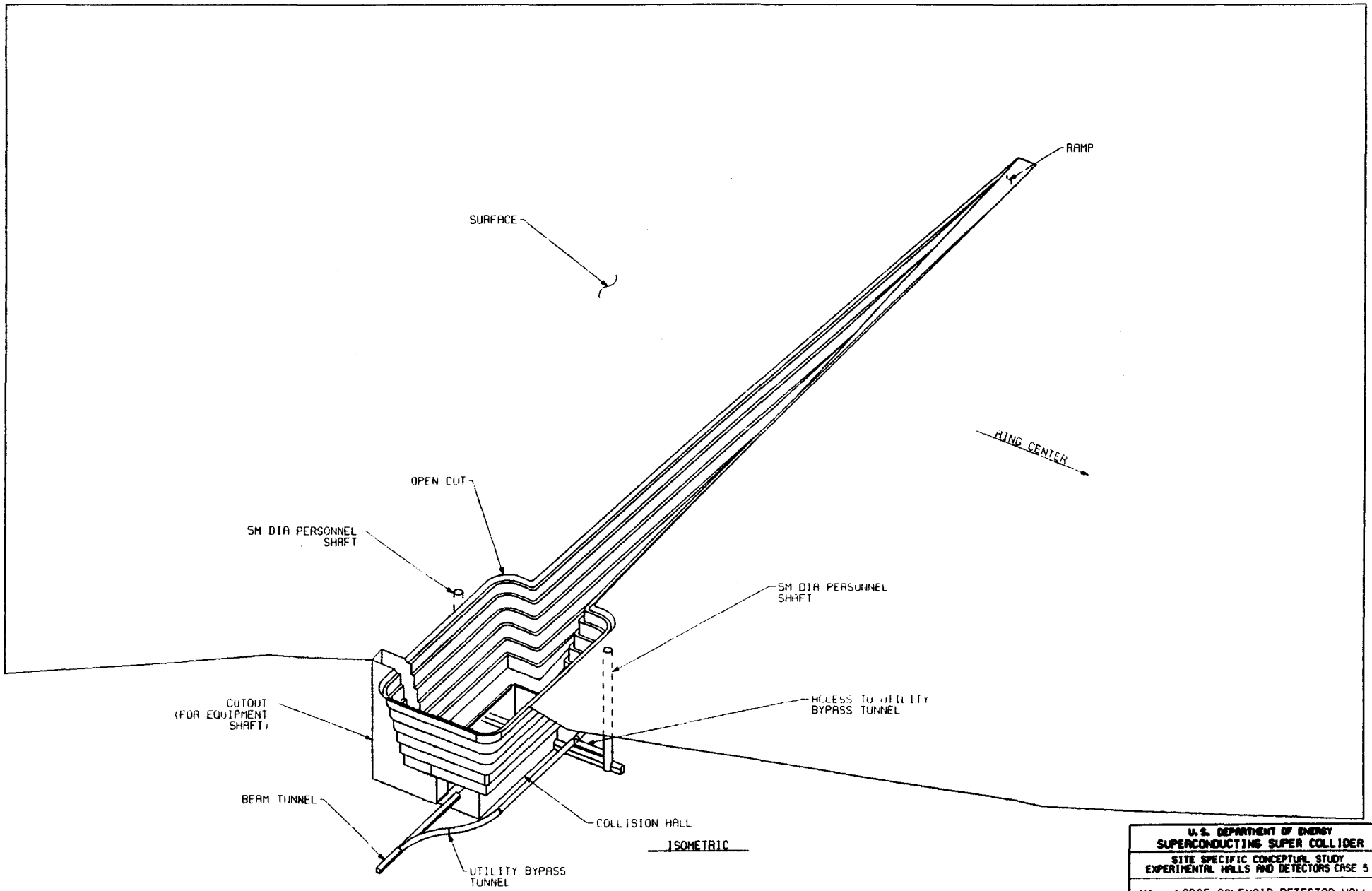


ISOMETRIC

| NO. | DATE | REVISION | REFERENCE DRAWINGS | NUMBER | NOTES |
|---|---|---|---|---|---|
| 1 | 1/14/88 | TEST REVISED | | | |
| 0 | 1/26/89 | UNDERGROUND RAMP ELIMINATED | | | |
| | | CUTOUT RELOCATED OUTSIDE RING | | | |
| A | 3/24/89 | ISSUED FOR REVIEW | | | |

DESCRIPTION / COST ACCOUNT: WORK COVERED BY THIS ACCOUNT CHARGED TO COST ACCOUNT ABOVE

CONSTRUCTION APPROVAL | APPROVAL | DATE | SCALE: NONE | DATE | PROFESSIONAL SEAL

DRAWN: C. LAUGHTON
CHECKED: A. NUNEZ

U.S. DEPARTMENT OF ENERGY
SUPERCONDUCTING SUPER COLLIDER

SITE SPECIFIC CONCEPTUAL STUDY
EXPERIMENTAL HALLS AND DETECTORS CASE 5

K1 - LARGE SOLENOID DETECTOR HALL
CUT AND COVER W/CUTOUT OPTION
ISOMETRIC

RTK Research Triangle Park, NC

URA/CDG

CONTRACT DE-AC02-85ER40230 | PROJECT 85122

DRAWING K1A-01 | DATE | REV C | DATE 5/10/89 | SHEET

Z61 (102,3125600E12.DGN NUNEZ 12-JUN-1989 09:

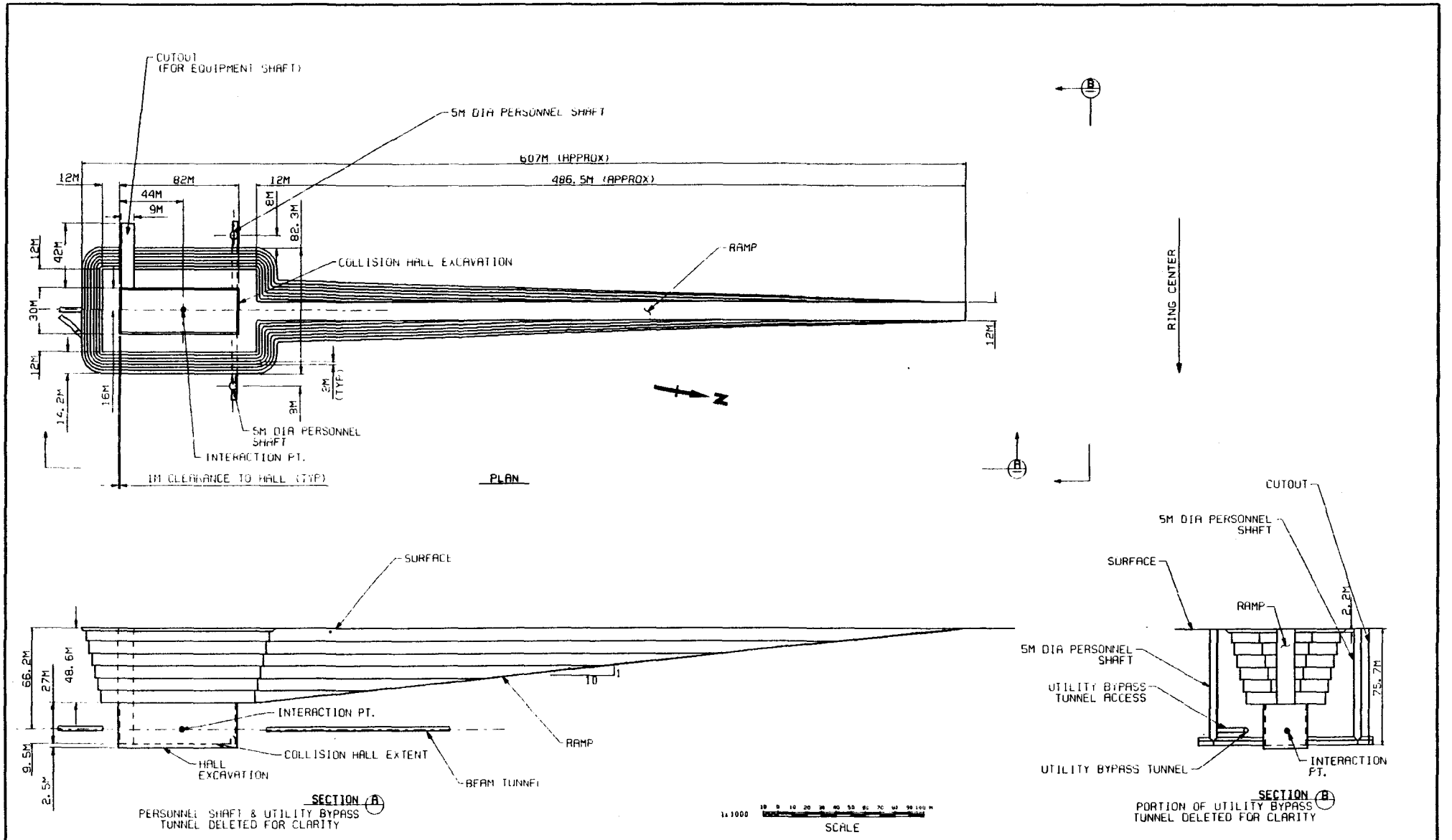


U.S. DEPARTMENT OF ENERGY
SUPERCONDUCTING SUPER COLLIDER

SITE SPECIFIC CONCEPTUAL STUDY
EXPERIMENTAL HALLS AND DETECTORS CASE 5

K1 - LARGE SOLENOID DETECTOR
CUT AND COVER W/CUTOUT OPTION
PLAN AND SECTIONS

| NO | DATE | REVISION | BY | CHK | APP | APP | REFERENCE DRAWINGS | NUMBER | NOTES |
|---|---|---|---|---|---|---|---|---|---|
| C | 5/10/88 | TEXT REVISED | | | | | | | |
| B | 4/8/88 | UNDERGROUND RAMP REMOVED | | | | | | | |
| | | CUTOUT RELOCATED OUTSIDE RING | | | | | | | |
| A | 3/28/88 | ISSUED FOR REVIEW | | | | | | | |

DESCRIPTION / COST ACCOUNT
WORK COVERED BY THIS ACCOUNT
CHARGED TO COST ACCOUNT ABOVE

CONSTRUCTION APPROVAL | APPROVAL | DATE

SCALE 1:1000
DESIGNED C. LAUGHTON
DRAWN R. NUNEZ
CHECKED
APPROVED
DATE

PROFESSIONAL SEAL

RTK Tucker Engineers Inc. Tucker Engineering Company Kaiser & Associates

URA/CDG

CONTRACT DE-AC02-85ER40230 | PROJECT 85122

DRAWING K1A-02 | DATE | REV C | DATE 5/10/88 | SHEET

Z61: (102,32)5600213.DGN
NUNEZ
22-JUN-1988 09:05

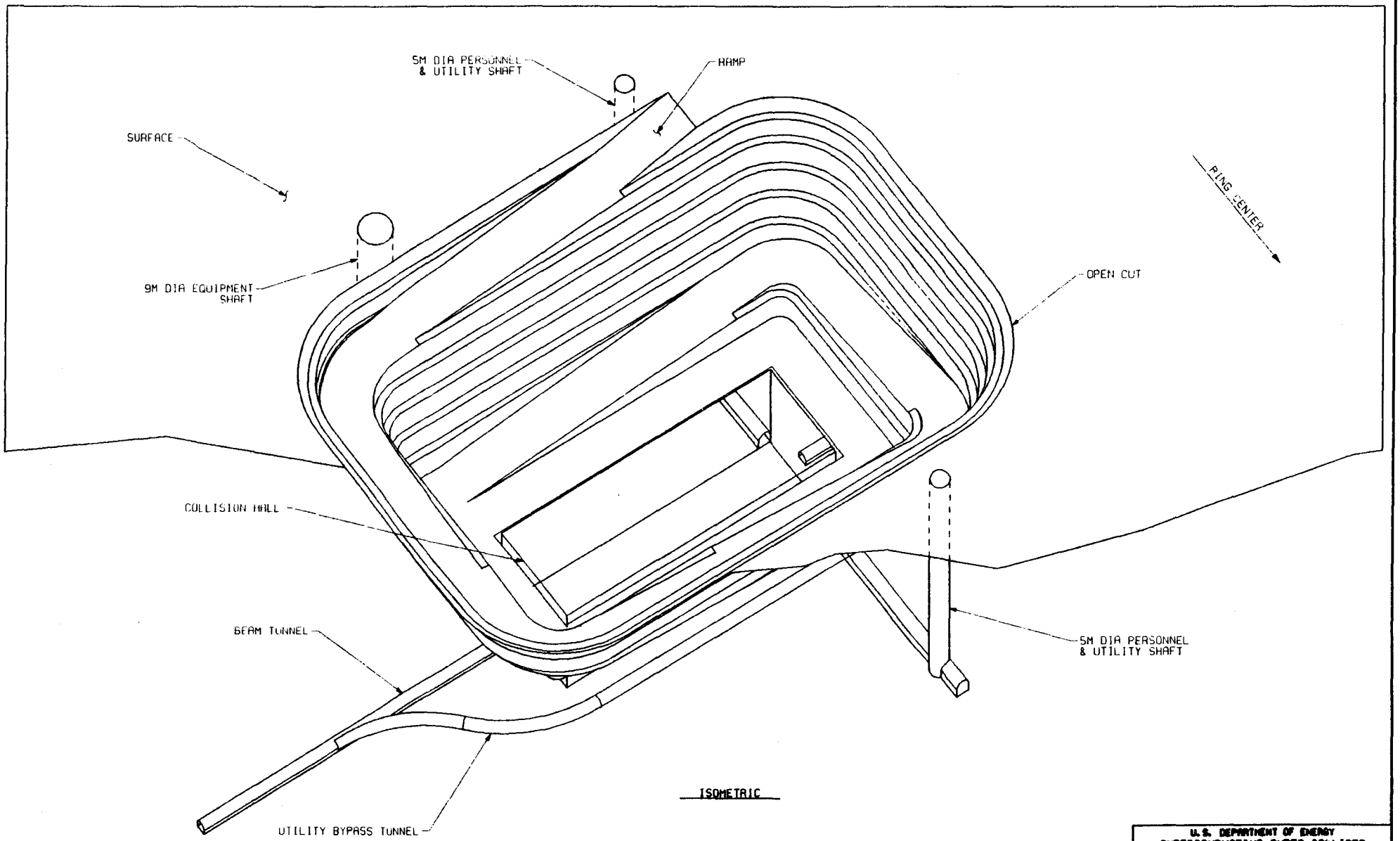


ISOMETRIC

| NO | DATE | REVISION | BY / CK | APP | REF | REFERENCE DRAWINGS | NUMBER | NOTES |
|---|---|---|---|---|---|---|---|---|
| 5 | 5/18/89 | TEXT REVISED | | | | | | |
| 4 | 5/5/89 | UNDERGROUND RAMP EL IMINATED | | | | | | |
| | | EQUIP SHAFT RELOCATED OUTSIDE RING | | | | | | |
| 3 | 3/28/89 | ISSUED FOR REVIEW | | | | | | |

DESCRIPTION — COST ACCOUNT
SOME COVERED BY THIS ACCOUNT
CHARGED TO COST ACCOUNT ABOVE

CONSTRUCTION APPROVAL

| APPROVAL | DATE |
|---|---|
| | |

| | | DATE |
|---|---|---|
| SCALE | NONE | |
| DESIGNED | C. LAUGHTON | |
| DR. | A. NUNEZ | |
| CHECKED | | |
| APPROVED | | |
| APPROVED | | |

PROFESSIONAL SEAL

U.S. DEPARTMENT OF ENERGY
SUPERCONDUCTING SUPER COLLIDER

SITE SPECIFIC CONCEPTUAL STUDY
EXPERIMENTAL HALLS AND DETECTORS CASE 5

K1 - LARGE SOLENOID DETECTOR HALL
CUT AND COVER W/SPIRAL RAMP OPTION
ISOMETRIC

RTK

URA/CDG

CONTRACT DE-AC02-85ER40230 | PROJECT 85122

DRAWING K1B-01 | DATE | REV C DATE 5/10/89 | SHEET

Z61: (102, X25600210.DGN 1 NUNEZ
12-JUN-1990 10:19

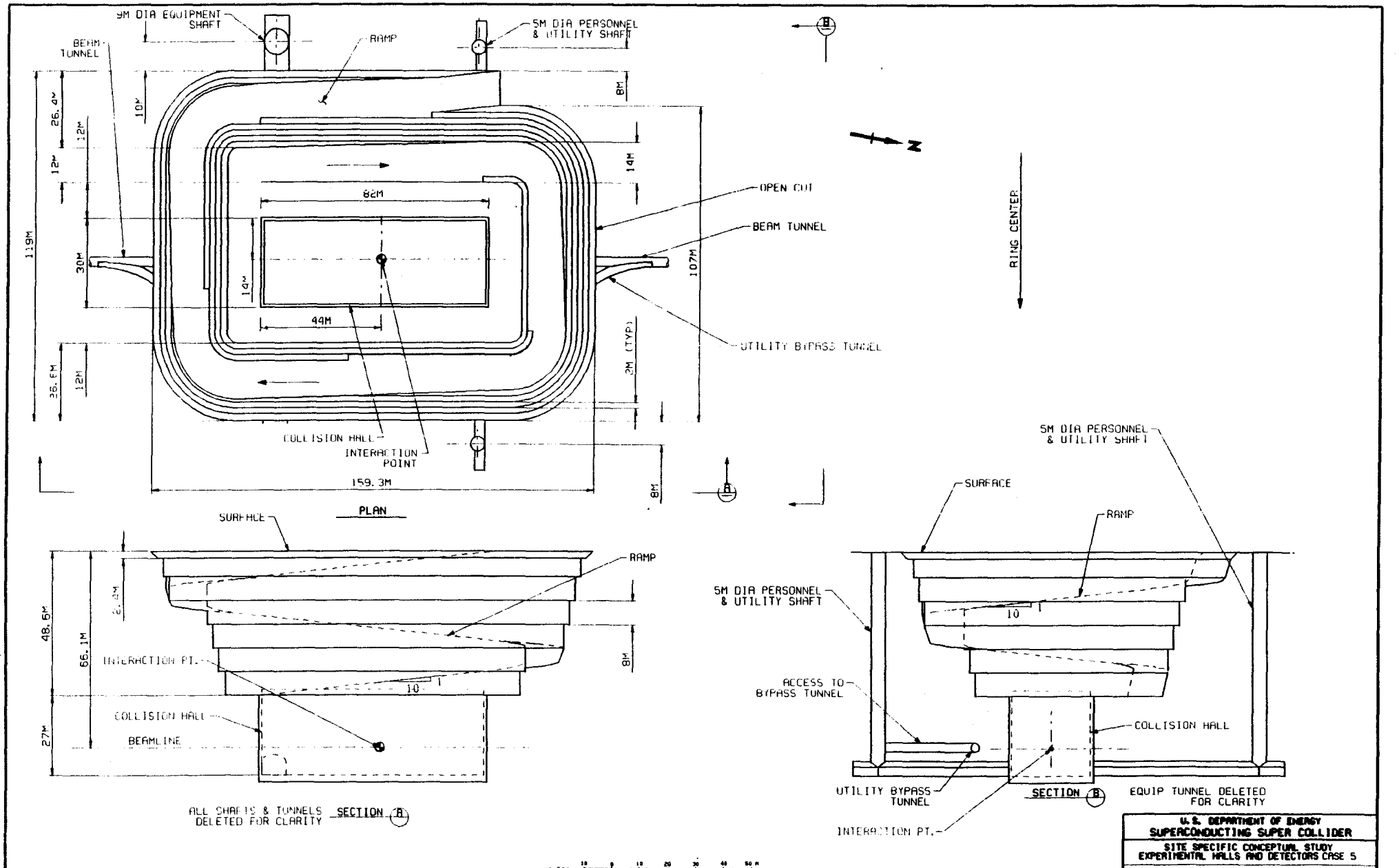


U.S. DEPARTMENT OF ENERGY
SUPERCONDUCTING SUPER COLLIDER

SITE SPECIFIC CONCEPTUAL STUDY
EXPERIMENTAL HALLS AND DETECTORS CASE 5

K1 - LARGE SOLENOID DETECTOR HALL
CUT AND COVER W/SPIRAL RAMP OPTION
PLAN AND SECTIONS

| NO | DATE | REVISION |
|---|---|---|
| A | 5/16/88 | TEXT REVISED |
| B | 4/28/88 | UNDERGROUND RAMP REMOVED<br>EQUIP SHAFT RELOCATED OUTSIDE RING |
| C | 3/28/88 | ISSUED FOR REVIEW |

REFERENCE DRAWINGS | NUMBER | NOTES

DESCRIPTION | COST ACCOUNT
WORK COVERED BY THIS ACCOUNT CHARGED TO COST ACCOUNT ABOVE

CONSTRUCTION APPROVAL | APPROVAL | DATE

SCALE 1:500
DRAWN C. LAUGHTON
CHECKED R. NUNEZ
APPROVED

PROFESSIONAL SEAL

RIK

URA/CDG

CONTRACT DE-AC02-85ER40230 | PROJECT 85122
DRAWING K1B-02 | DATE | REV C | DATE 5/10/89 | SHEET

Z61 FILE: 3125600211.DGN NUNEZ 12-JUN-1990 10:23

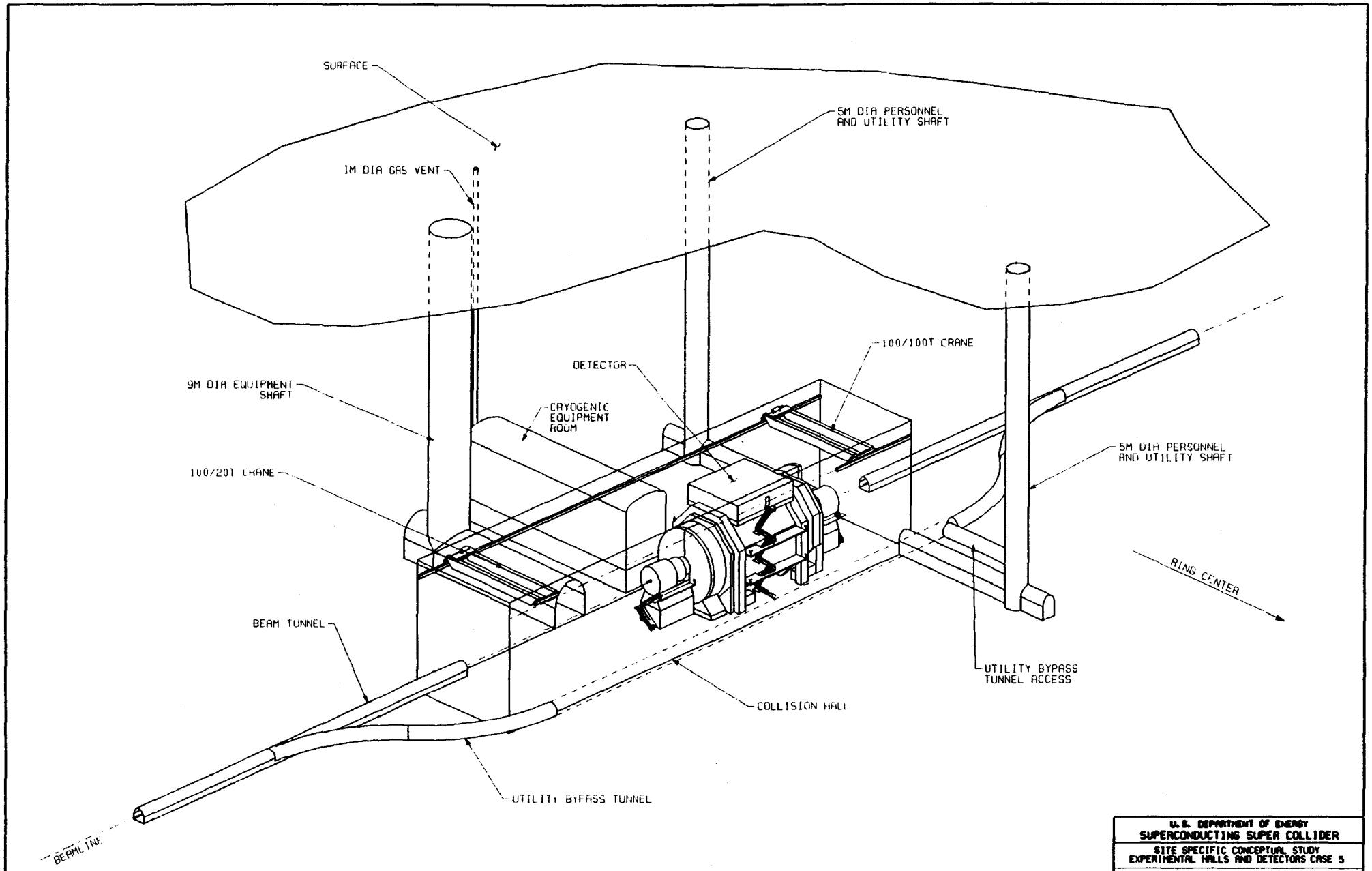


| NO | DATE | REVISION | BY | APP | APP | REFERENCE DRAWINGS | NUMBER | NOTES | DESCRIPTION / COST ACCOUNT |
|---|---|---|---|---|---|---|---|---|---|
| A | 3/18/89 | CRYOGENIC ROOM ADDED | | | | | | | |
| B | 4/24/89 | ISSUED FOR REVIEW | | | | | | | |

CONSTRUCTION APPROVAL

APPROVAL | DATE

SCALE: NO SCALE | DATE
DESIGNED: N. WARE / W. TERRY
DRAWN: A. NUNEZ
CHECKED
APPROVED
SUPERVISED

PROFESSIONAL SEAL

U.S. DEPARTMENT OF ENERGY
SUPERCONDUCTING SUPER COLLIDER

SITE SPECIFIC CONCEPTUAL STUDY
EXPERIMENTAL HALLS AND DETECTORS CASE 5

K1 - LARGE SOLENOID DETECTOR
EXTENDED COLLISION HALL
HALL ISOMETRIC

URA/CDG

CONTRACT DE-AC02-85ER40230 | PROJECT 85122

DRAWING K1C-01 | DATE | REV B DATE 5/18/89 | SHEET

Z&H 1162, 3125500220.DGN
NUNEZ
12-JUN-1989 10:27

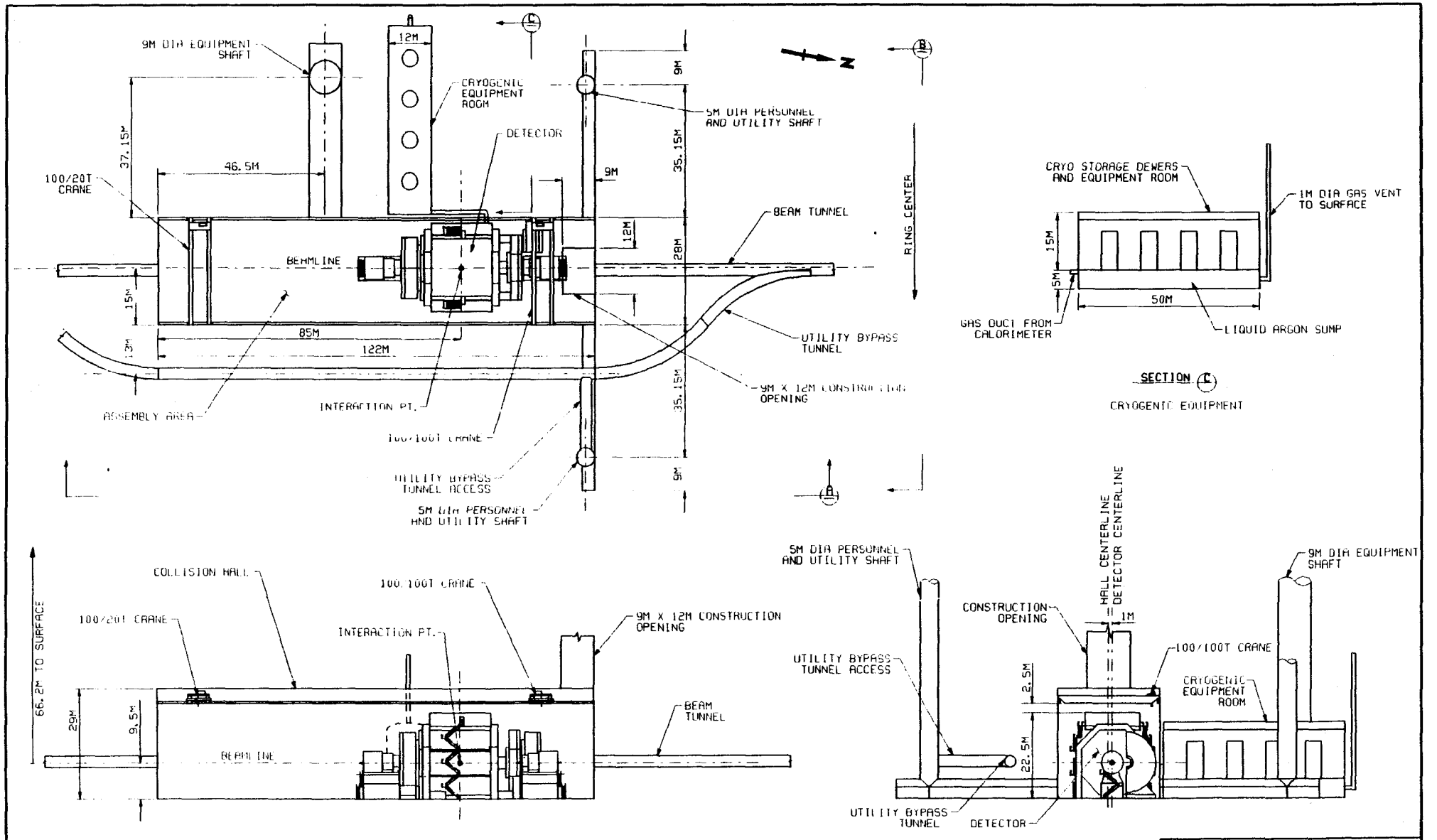


U.S. DEPARTMENT OF ENERGY
SUPERCONDUCTING SUPER COLLIDER

SITE SPECIFIC CONCEPTUAL STUDY
EXPERIMENTAL HALLS AND DETECTORS CASE 5

K1 - LARGE SOLENOID DETECTOR
EXTENDED COLLISION HALL
COLLISION HALL PLAN & SECTIONS

URA/CDG

CONTRACT DE-AC02-85ER40230

PROJECT 85122

DRAWING K1C-02 DATE ____ REV B DATE 5/10/85 SHEET ____

SCALE: 1:400
DRAWN: A. NUNEZ
DETAILED:
CHECKED:
APPROVED:

| NO | DATE | REVISION | | APP | CHK | REFERENCE DRAWINGS | NUMBER | NOTES |
|---|---|---|---|---|---|---|---|---|
| 1 | 5/10/85 | CRYOGENIC FACILITIES MODIFIED | | | | | | |
| 0 | 4/24/85 | ISSUED FOR REVIEW | | | | | | |

DESCRIPTION: COST ACCOUNT
JOBS CHARGED BY THIS ACCOUNT CHARGED TO COST ACCOUNT ABOVE

CONSTRUCTION APPROVAL | APPROVAL | DATE | PROFESSIONAL SEAL

Z61:[182,312]500021.DGN NUNEZ 12-JUN-1986 10:31

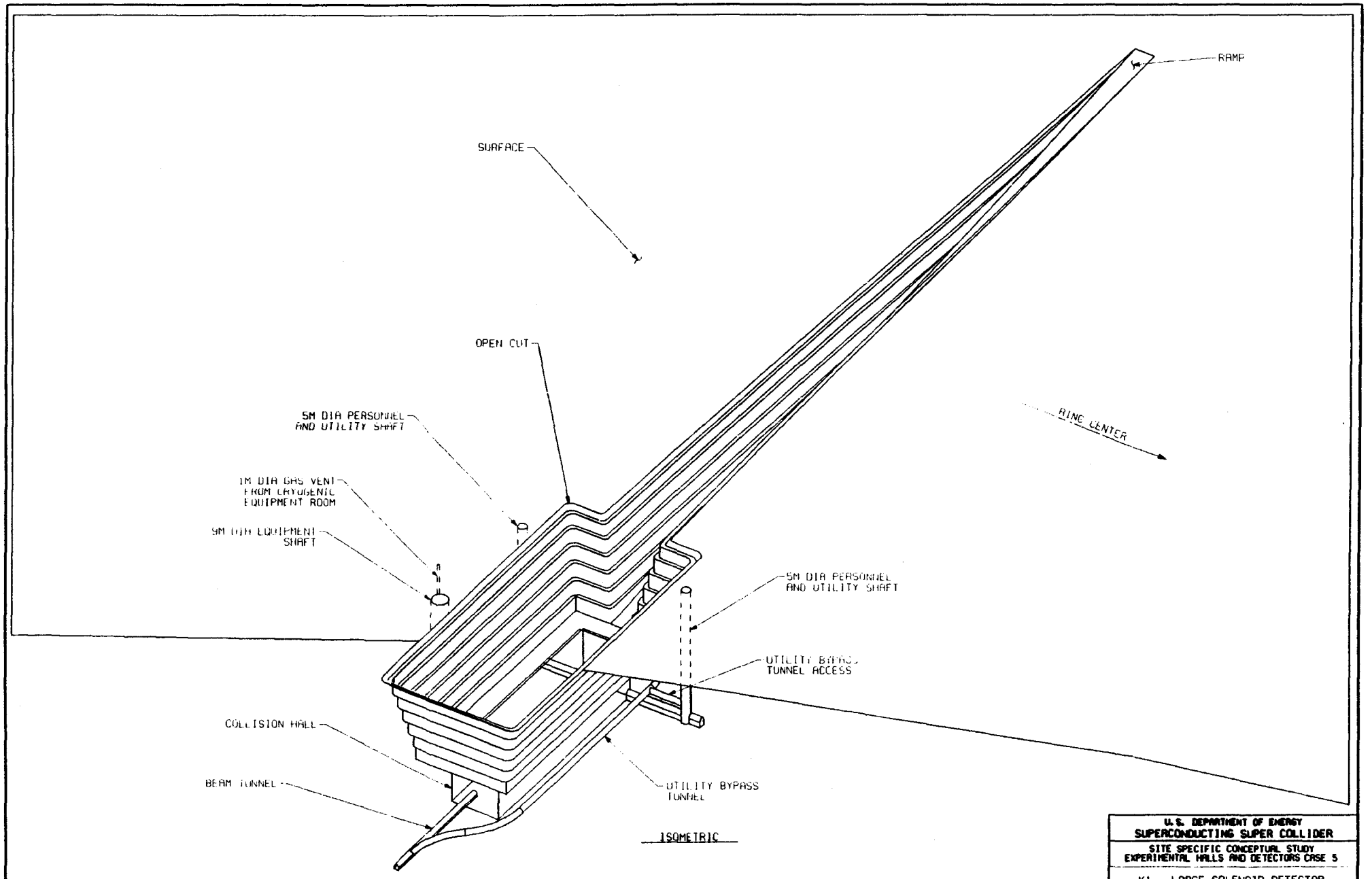


ISOMETRIC

| NO | DATE | REVISION | BY | CHK | APP | REF | DWG NUMBER |
|---|---|---|---|---|---|---|---|
| 1 | 5/18/89 | CRYOGENIC FACILITIES ADDED | | | | | |
| 0 | 4/24/89 | ISSUED FOR REVIEW | | | | | |

REFERENCE DRAWINGS | NUMBER | NOTES

DESCRIPTION | COST ACCOUNT
WORK COVERED BY THIS ACCOUNT CHARGED TO (ACT. NUMBER AND)

CONSTRUCTION APPROVAL

APPROVAL | DATE

SCALE: NO SCALE
DRAWN: C. LAUGHTON
CHECKED: R. NUNEZ
ACCEPTED:
APPROVED:
APPROVED:

DATE

PROFESSIONAL SEAL

U.S. DEPARTMENT OF ENERGY
SUPERCONDUCTING SUPER COLLIDER

SITE SPECIFIC CONCEPTUAL STUDY
EXPERIMENTAL HALLS AND DETECTORS CASE 5

K1 - LARGE SOLENOID DETECTOR
EXTENDED COLLISION HALL
CUT & COVER ISOMETRIC

RTK

URA/CDG

CONTRACT DE-AC02-85ER40230

PROJECT 85122

DRAWING K1C-03 | DATE | REV B DATE 5/18/89 | SHEET

Z61:[102.J2650210.DGN] NUNEZ 12-JUN 1989 10:38

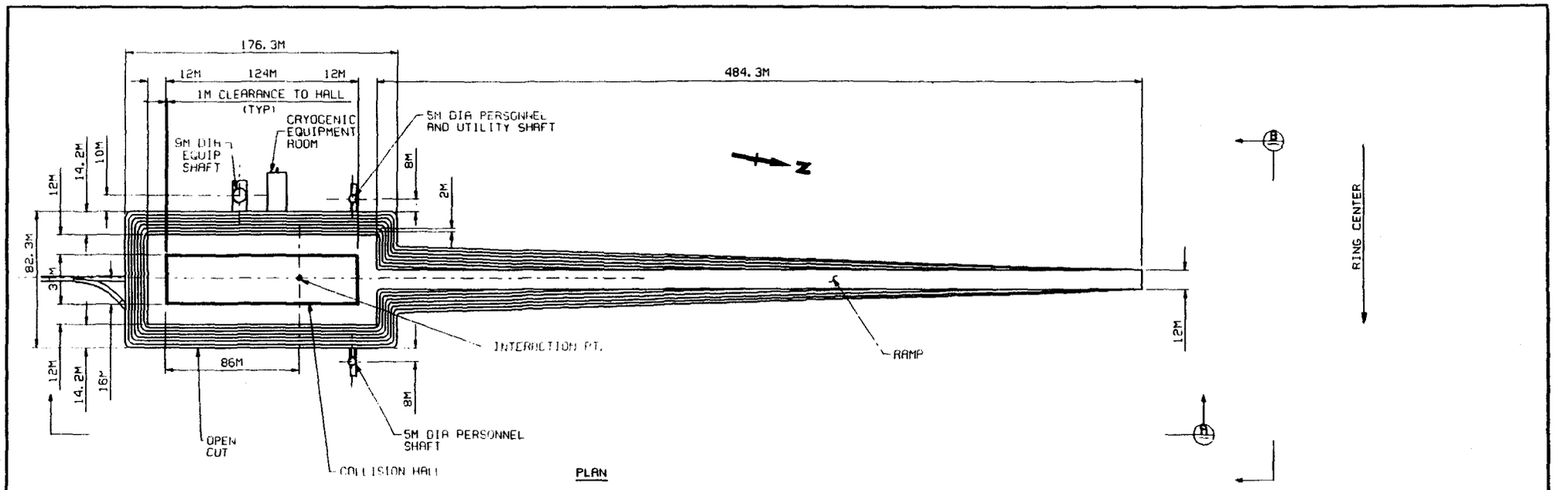


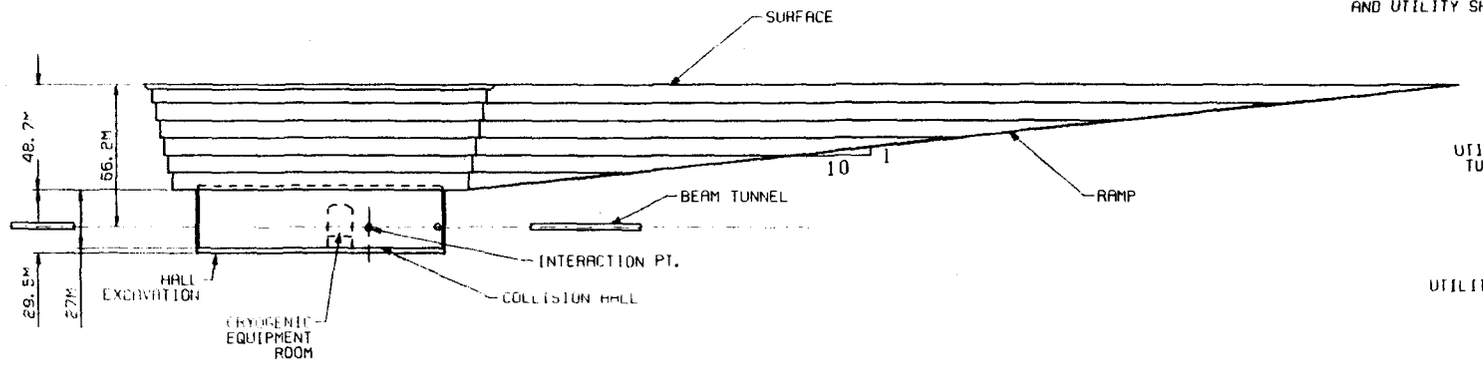


SECTION (A)

EQUIPMENT, PERSONNEL SHAFTS AND BYPASS TUNNEL DELETED FOR CLARITY

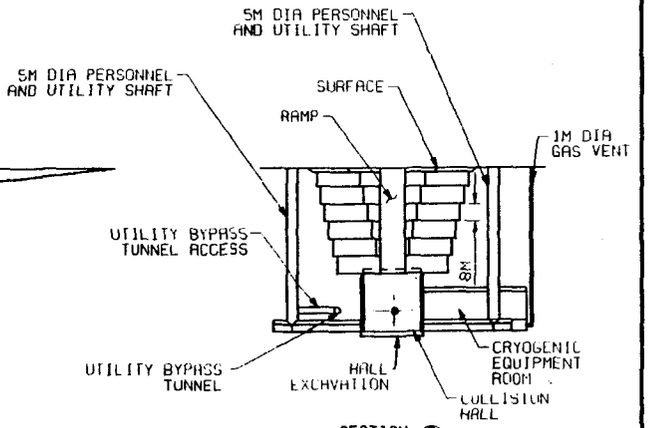


SECTION (B)

EQUIPMENT SHAFT DELETED FOR CLARITY

1:1000 SCALE

U.S. DEPARTMENT OF ENERGY
SUPERCONDUCTING SUPER COLLIDER

SITE SPECIFIC CONCEPTUAL STUDY
EXPERIMENTAL HALLS AND DETECTORS CASE 5

K1 - LARGE SOLENOID DETECTOR
EXTENDED COLLISION HALL
CUT & COVER PLAN AND SECTIONS

| NO | DATE | REVISION | REFERENCE DRAWINGS | NUMBER | NOTES |
|---|---|---|---|---|---|
| A | 5/16/88 | CRYOGENIC FACILITIES ADDED | | | |
| B | 6/24/88 | ISSUED FOR REVIEW | | | |

DESCRIPTION: COST RECOUNT
NOW SUPPORTED BY THIS RECOUNT
CHARGED TO COST RECOUNT ABOVE

CONSTRUCTION APPROVAL

APPROVAL | DATE

SCALE: 1:1000
DRAWN: C. LAUGHTON
CHECKED: A. NUNEZ

DATE

PROFESSIONAL SEAL

URA/CDG

CONTRACT DE-AC02-85ER40230

PROJECT 85122

DRAWING K1C-04 DATE ____ REV B DATE 5/11/89 SHEET ____

Z:\K1\K02.3D\5600010.DGN NUNEZ 12-JUN-1989 10:38

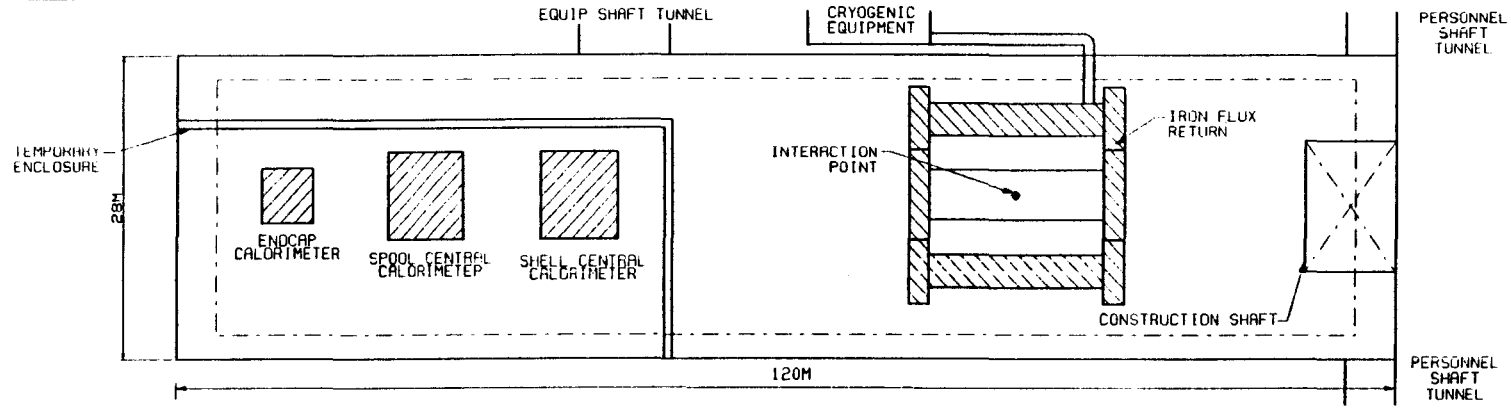


**PLAN - ASSEMBLY STEP 1**

ASSEMBLE FLUX RETURN

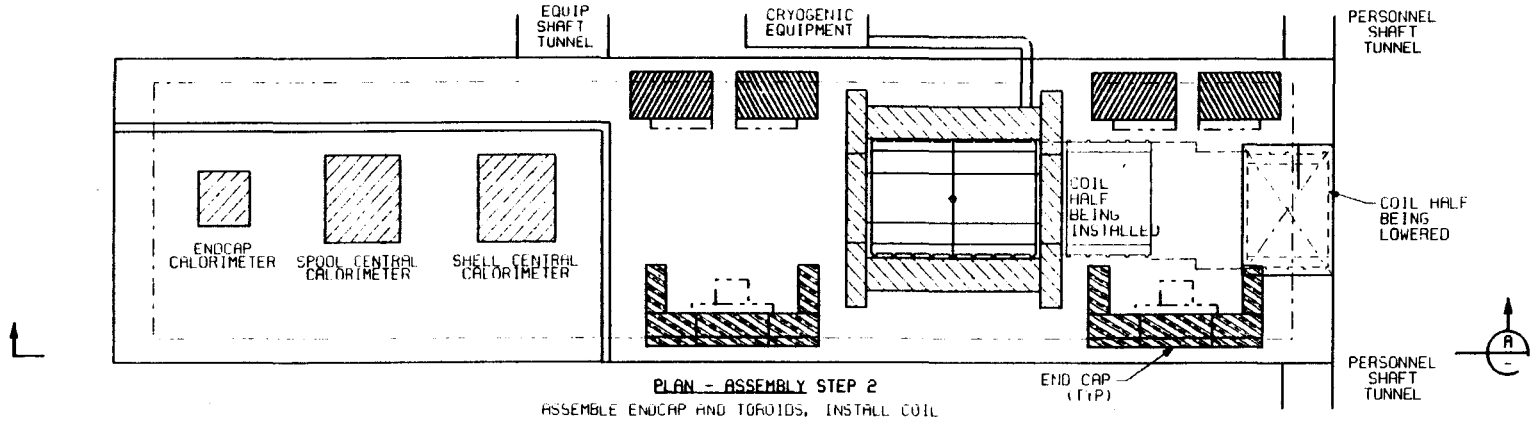


**PLAN - ASSEMBLY STEP 2**

ASSEMBLE ENDCAP AND TOROIDS, INSTALL COIL

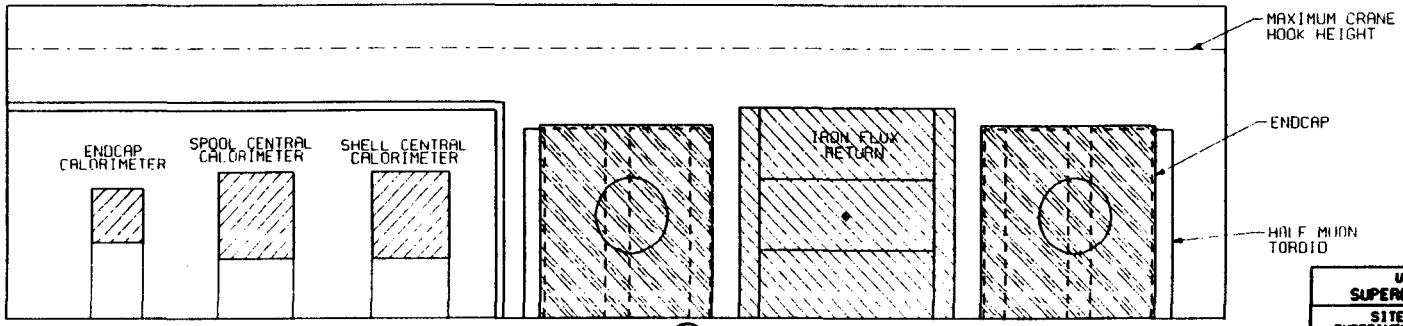


**SECTION A**

U.S. DEPARTMENT OF ENERGY
SUPERCONDUCTING SUPER COLLIDER

SITE SPECIFIC CONCEPTUAL STUDY
EXPERIMENTAL HALLS AND DETECTORS CASE 5

K1 - LARGE SOLENOID DETECTOR
EXTENDED HALL OPTION
DETECTOR ASSEMBLY - STEPS 1 AND 2

RTK

URA/CDG

CONTRACT DE-AC02-85ER40230

PROJECT 85122

DRAWING K1C-05 DATE ____ REV B DATE 5/10/89 SHEET ____

| NO | DATE | REVISION | BY CHK | APP | APP | B BRG WORK |
|---|---|---|---|---|---|---|
| A | 4/28/89 | CRYOGENIC EQUIP HOLD, TEXT CHANGED | | | | |
| 0 | 4/28/89 | ISSUED FOR REVIEW | | | | |

REFERENCE DRAWINGS | NUMBER | NOTES

1. CROSS HATCHING INDICATES COMPONENT UNDER CONSTRUCTION

DESCRIPTION | COST ACCOUNT
SCALE CHANGED BY THIS REPORT CHANGED TO CONT ACCOUNT ABOVE

CONSTRUCTION APPROVAL | APPROVAL | DATE | SCALE 1:200 | DATE | PROFESSIONAL SEAL

DRAWN W. TERRY
CHECKED W. TERRY

2611 11NZ.3301500212.DGN NUNEZ 12-JUN-1989 10:42

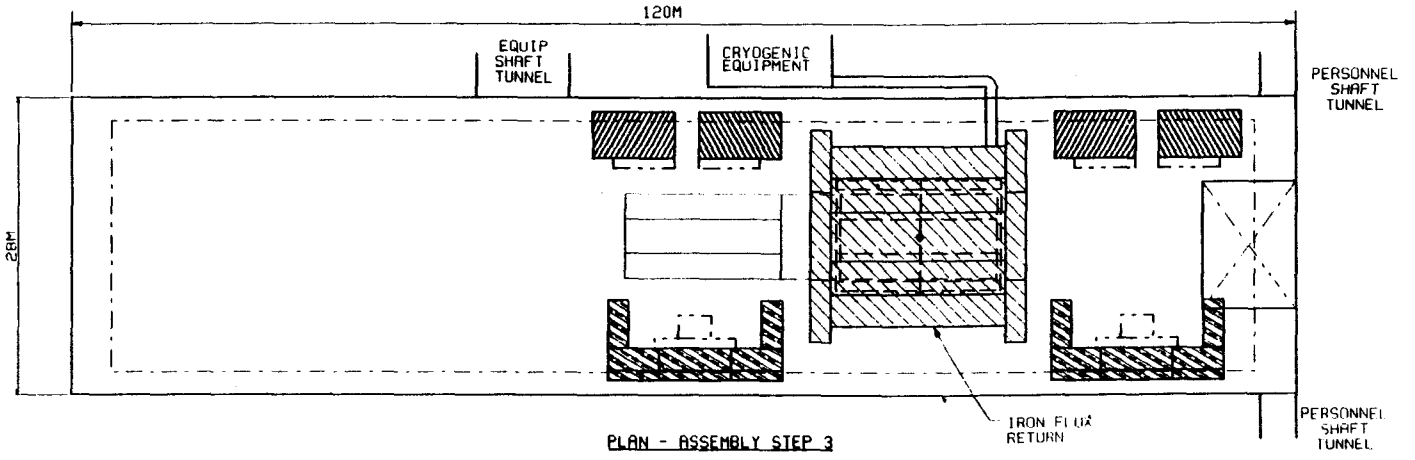


**PLAN - ASSEMBLY STEP 3**

INSTALL AND ALIGN MUON CHAMBERS
INSTALL CALORIMETER

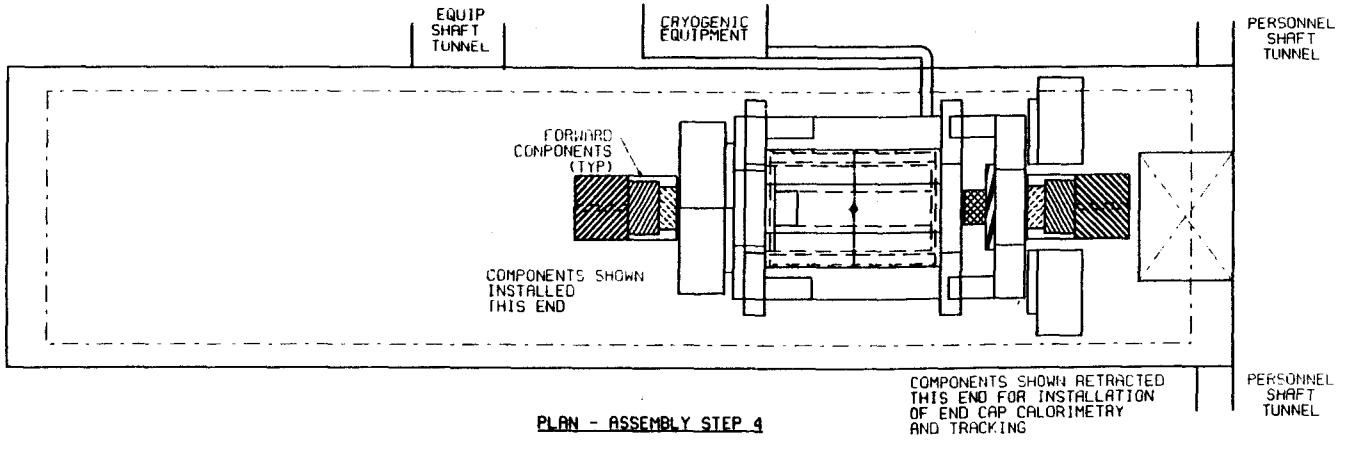


**PLAN - ASSEMBLY STEP 4**

MOVE COMPLETED COMPONENTS IN PLACE
ASSEMBLE FORWARD COMPONENTS
INSTALL END CAP CALORIMETRY AND TRACKING
INSTALL MUON TRACKING

| NO | DATE | REVISION | | APP | APP | DRAWN |
|---|---|---|---|---|---|---|
| 1 | 6/13/91 | CRYOGENIC EQUIPMENT MOVED, TEXT CHANGED | | | | |
| 0 | 4/19/89 | ISSUED FOR REVIEW | | | | |

REFERENCE DRAWINGS | NUMBER

NOTES: 1. CROSS HATCHING INDICATES COMPONENT UNDER CONSTRUCTION

DESCRIPTION | COST ACCOUNT
WORK TOTALED BY THIS DRAWING CARRIED TO COST ACCOUNT ABOVE

CONSTRUCTION APPROVAL | APPROVAL | DATE | DATE

SCALE 1:200
DESIGNED W. TERRY
DRAWN
CHECKED
APPROVED
APPROVED

PROFESSIONAL SEAL

**U.S. DEPARTMENT OF ENERGY**
**SUPERCONDUCTING SUPER COLLIDER**

**SITE SPECIFIC CONCEPTUAL STUDY**
**EXPERIMENTAL HALLS AND DETECTORS CASE 5**

K1 - LARGE SOLENOID DETECTOR
EXTENDED HALL OPTION
DETECTOR ASSEMBLY - STEPS 3 AND 4

RTK Associates Inc. Tudor Engineering Company Walter P. Moore-Burger

URA/CDG

CONTRACT DE-AC02-85ER40230 | PROJECT 85122

DRAWING K1C-06 | DATE | REV B | DATE 5/10/89 | SHEET

File (102)3101500213.DGN
NUNEZ
12-Jun-1989 10:45

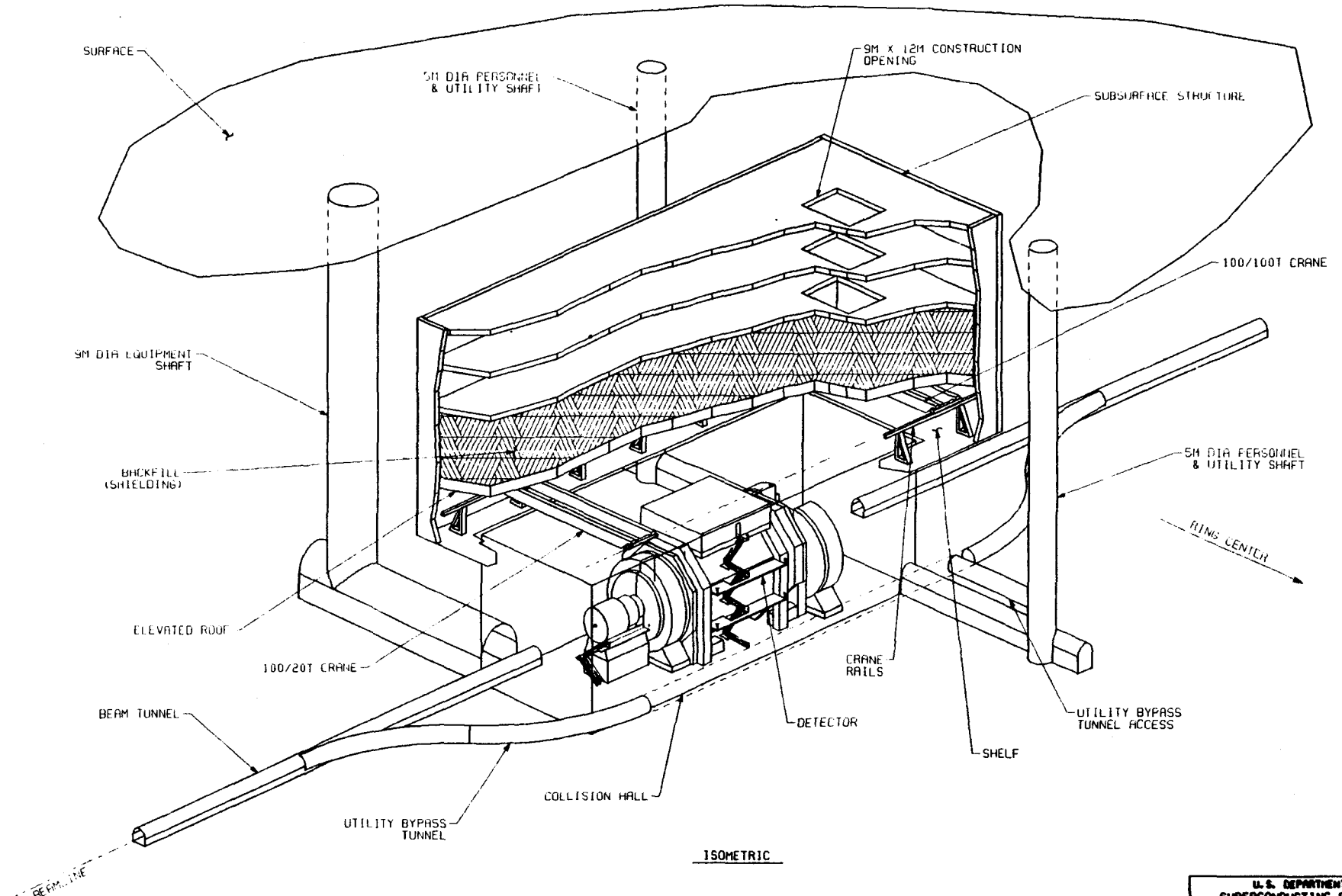


ISOMETRIC

U.S. DEPARTMENT OF ENERGY
SUPERCONDUCTING SUPER COLLIDER

SITE SPECIFIC CONCEPTUAL STUDY
EXPERIMENTAL HALLS AND DETECTORS CASE 5

K1 - LARGE SOLENOID DETECTOR
COLLISION HALL W/ELEVATED ROOF OPTION
ISOMETRIC

| NO | DATE | REVISION | BY | CHK | APP | APP | REFERENCE DRAWINGS | NUMBER | NOTES |
|---|---|---|---|---|---|---|---|---|---|
| 5 | | | | | | | | | |
| 4 | | | | | | | | | |
| 3 | | | | | | | | | |
| 2 | | | | | | | | | |
| 1 | | | | | | | | | |
| 5 | 5/10/89 | TEXT REVISED | | | | | | | |
| 4 | 5/2/89 | ISSUED FOR REVIEW | | | | | | | |

| DESCRIPTION | COST ACCOUNT |
|---|---|
| GOAL CONTAINED BY THIS ACCOUNT CARRIED TO COST ACCOUNT ABOVE | |

CONSTRUCTION APPROVAL

| APPROVAL | DATE |
|---|---|
| | |

| | | DATE |
|---|---|---|
| SCALE: | NO SCALE | |
| DESIGNED BY | C. LAUGHTON | |
| DRAWN BY | R. NUNEZ | |
| CHECKED BY | | |
| APPROVED BY | | |
| APPROVED BY | | |
| APPROVED BY | | |

PROFESSIONAL SEAL

RTK Bechtel Engineers Inc. Bechtel Engineering Consultants Bechtel & Partners-Ltd.

CONTRACT DE-AC02-85ER40230

URA/CDG

PROJECT 85122

DRAWING K1D-01 DATE ____ REV B DATE 5/10/89 SHEET ____

Z:\ (162.3)25500E10.DGN NUNEZ 12-JUN-1989 10:49

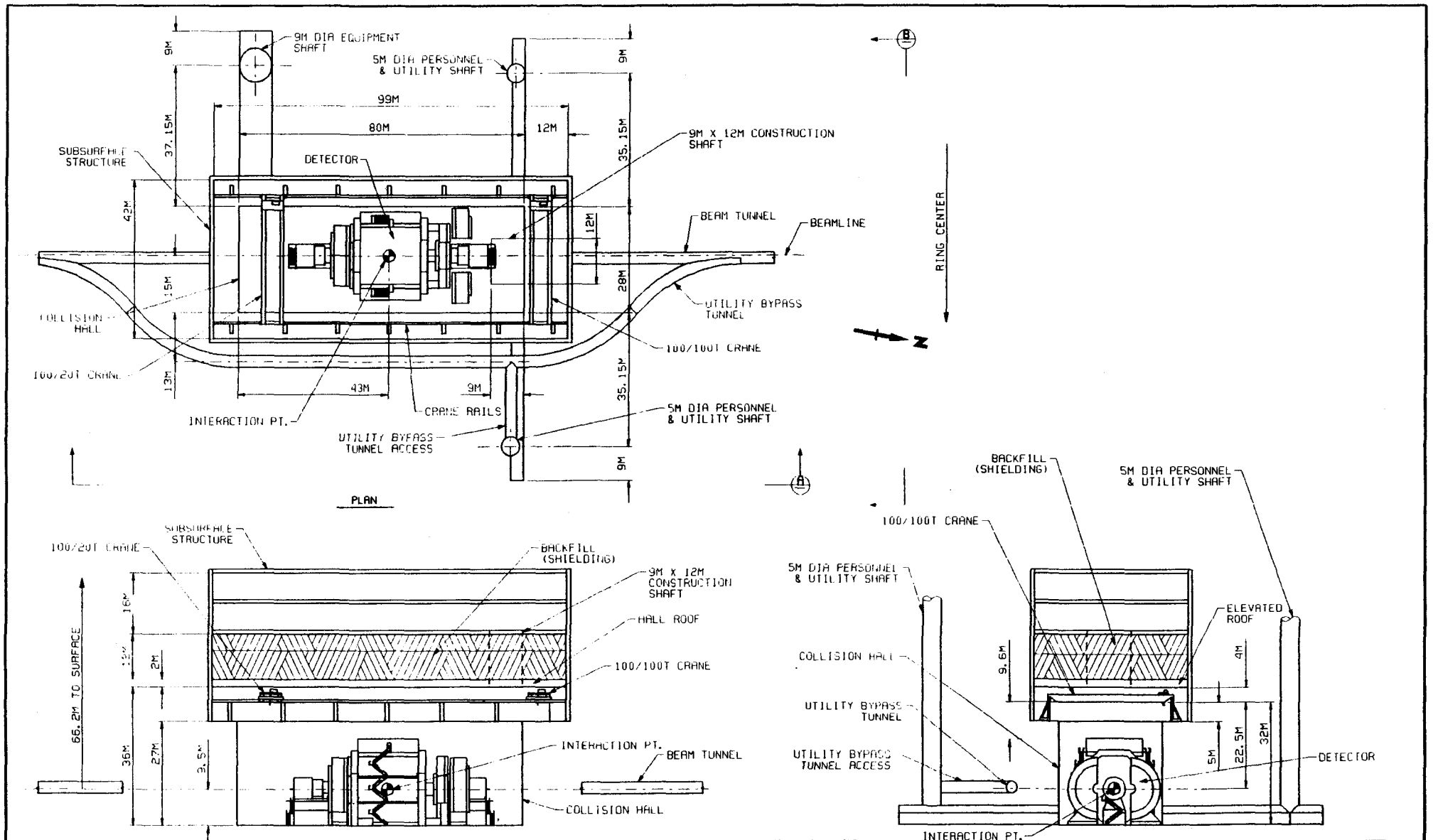


U.S. DEPARTMENT OF ENERGY
SUPERCONDUCTING SUPER COLLIDER

SITE SPECIFIC CONCEPTUAL STUDY
EXPERIMENTAL HALLS AND DETECTORS CASE 5

K1 - LARGE SOLENOID DETECTOR
COLLISION HALL W/ELEVATED ROOF OPTION
PLAN AND SECTIONS

URA/CDG

CONTRACT DE-AC02-85ER40230

PROJECT 85122

DRAWING K1D-02

DATE

REV 0

DATE 5/19/88

SHEET

SCALE 1:400

DESIGNED C. LAUGHTON

DRAWN R. NUNEZ

| NO | DATE | REVISION | BY | CHK | APP | REF DWG | REFERENCE DRAWINGS | NUMBER | NOTES |
|---|---|---|---|---|---|---|---|---|---|
| 2 | 5/18/88 | TEXT REVISED | | | | | | | |
| 1 | 6/9/88 | ISSUED FOR REVIEW | | | | | | | |

DESCRIPTION COST ACCOUNT
NONE COVERED BY THIS RECORD
CHANGED TO COST ACCOUNT ABOVE

CONSTRUCTION APPROVAL

APPROVAL DATE

PROFESSIONAL REG.

Z61:[10E.3]K1D0002.DGN
NUNEZ
12-JUN-1990 10:54

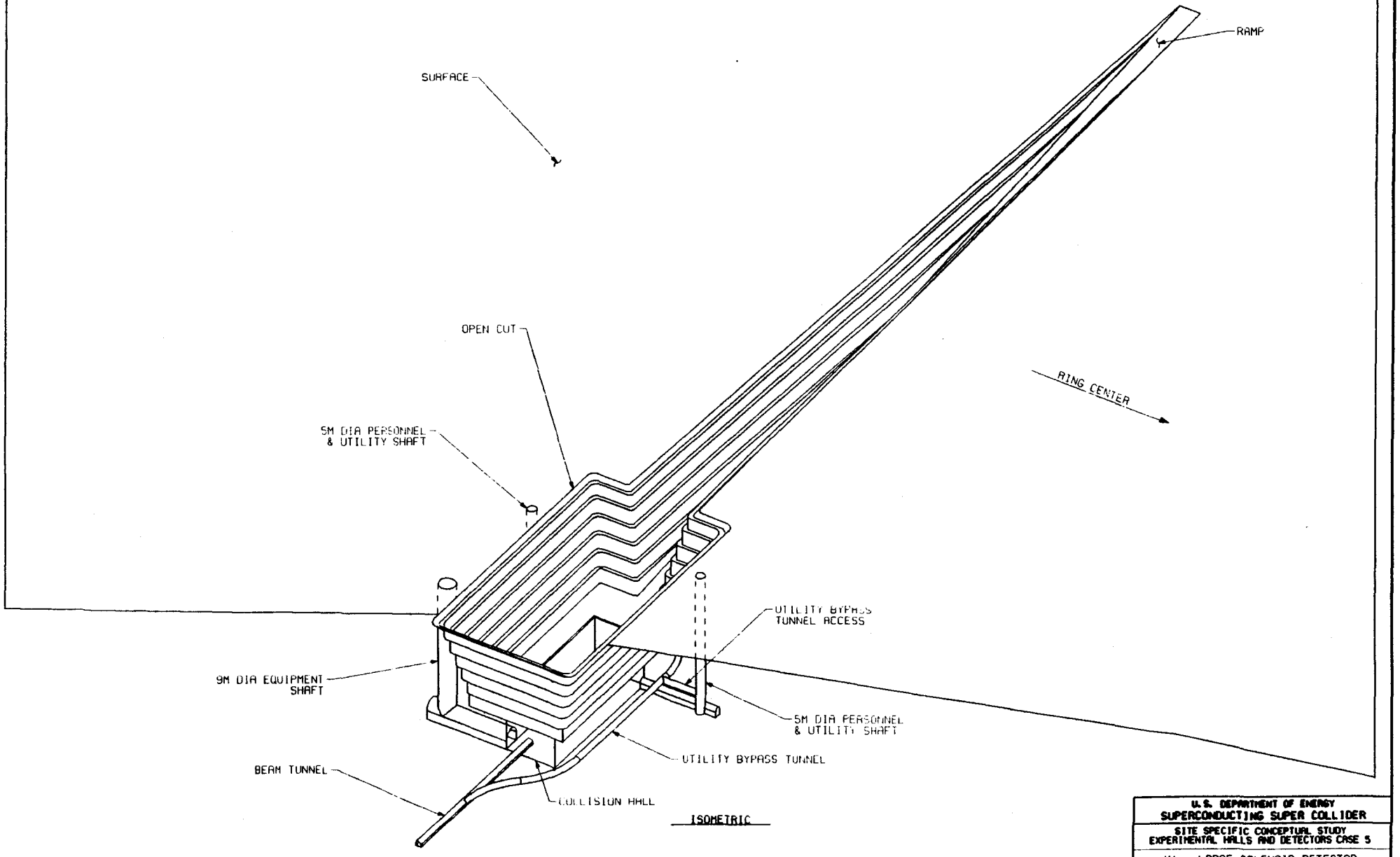


ISOMETRIC

| NO | DATE | REVISION | BY | CHK | APP | APP | DATE |
|---|---|---|---|---|---|---|---|
| 1 | 5/14/88 | TEXT REVISED | | | | | |
| 0 | 4/14/88 | ISSUED FOR REVIEW | | | | | |

REFERENCE DRAWINGS | NUMBER | NOTES

DESCRIPTION | COST ACCOUNT
DOWN REFERRED BY THIS DESIGN CHARGED TO COST ACCOUNT ABOVE

CONSTRUCTION APPROVAL | APPROVAL | DATE | PROFESSIONAL SEAL

SCALE: NO SCALE | DATE
DRAWN: C. LAUGHTON
CHECKED: R. NUNEZ
APPROVED

U.S. DEPARTMENT OF ENERGY
SUPERCONDUCTING SUPER COLLIDER

SITE SPECIFIC CONCEPTUAL STUDY
EXPERIMENTAL HALLS AND DETECTORS CASE 5

K1 - LARGE SOLENOID DETECTOR
COLLISION HALL W/ELEVATED ROOF OPTION
CUT & COVER ISOMETRIC

RTK | URA/CDG

CONTRACT DE-AC02-85ER40230 | PROJECT 85122

DRAWING K1D-03 | DATE | REV 0 | SHEET

2611 line, 3125500214.DGN NUNEZ 12-JAN-1988 11:11

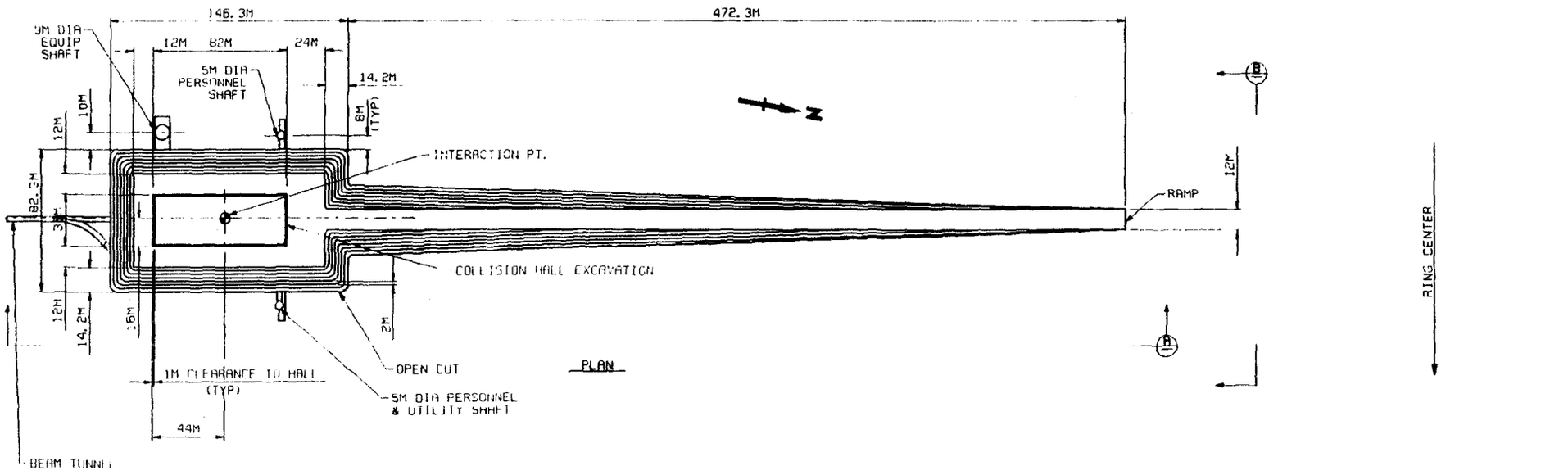


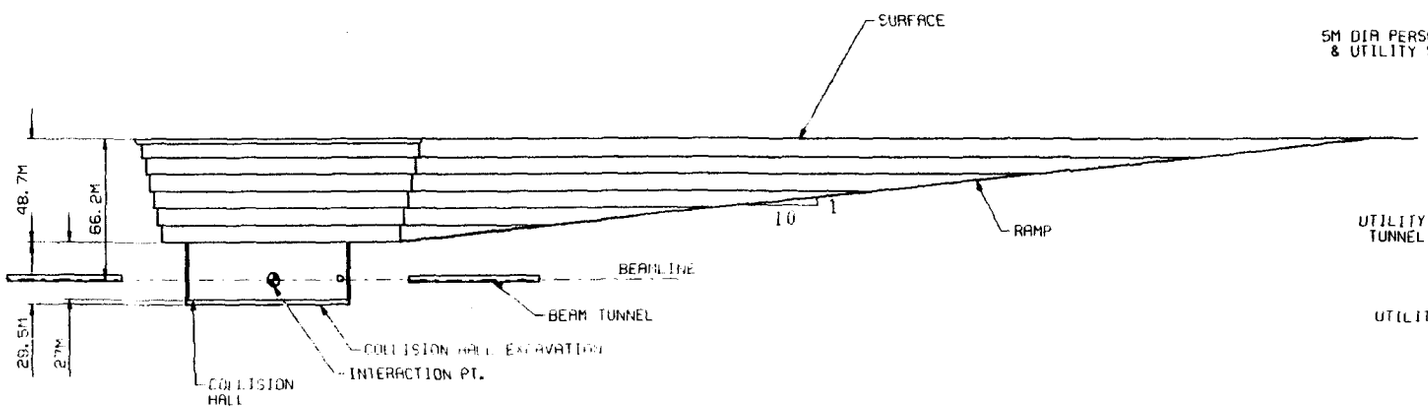


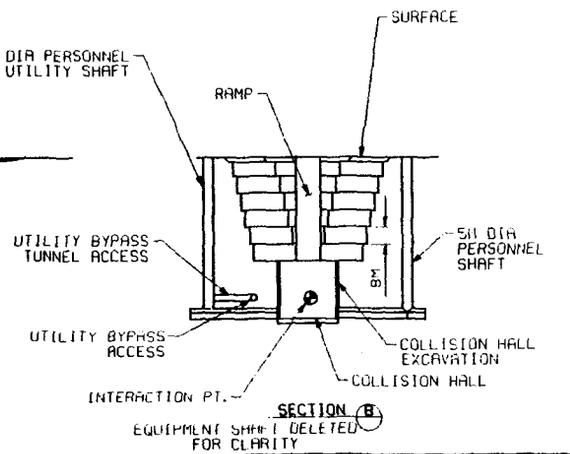


1:1000 SCALE

U.S. DEPARTMENT OF ENERGY
SUPERCONDUCTING SUPER COLLIDER

SITE SPECIFIC CONCEPTUAL STUDY
EXPERIMENTAL HALLS AND DETECTORS CASE 5

K1 - LARGE SOLENOID DETECTOR
COLLISION HALL W/ELEVATED ROOF OPTION
CUT & COVER PLAN AND SECTIONS

RTK

URA/CDG

CONTRACT DE-AC02-85ER40230

PROJECT 85122

DRAWING K1D-04 | DATE | REV. B | DATE 5/18/89 | SHEET

| NO. | DATE | REVISION | REFERENCE DRAWINGS | NUMBER | NOTES |
|---|---|---|---|---|---|
| 2 | 5/18/89 | TEXT REVISED | | | |
| 1 | 5/18/89 | ISSUED FOR REVIEW | | | |

CONSTRUCTION APPROVAL | APPROVAL | DATE | SCALE 1:1000 | DATE | PROFESSIONAL SEAL

DESIGNED C. LAUGHTON
DRAWN R. NUNEZ

2411 (182,3)(5500215.DGN NUNEZ 12-JUN-1990 11:18

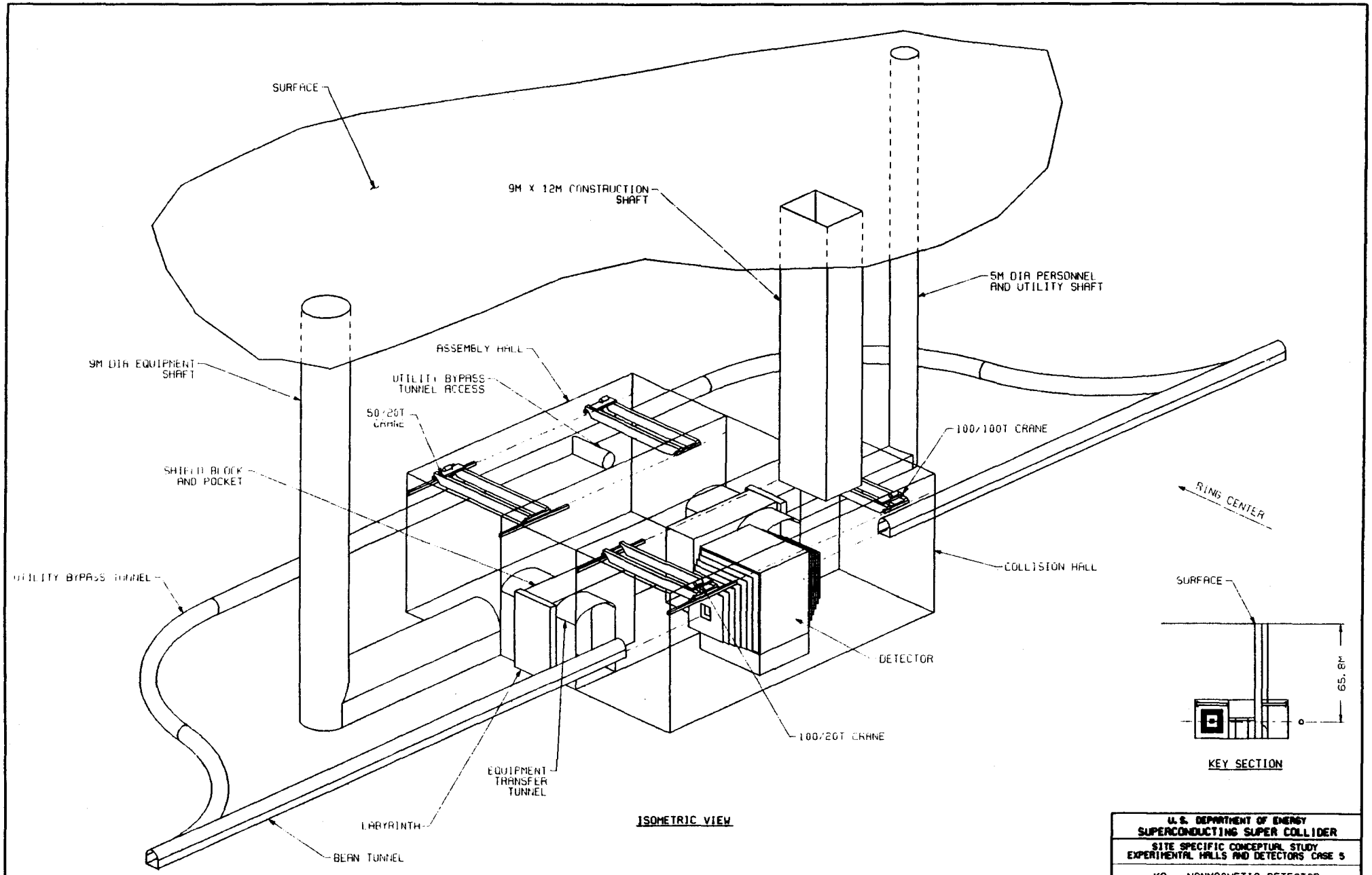


ISOMETRIC VIEW

| REV | DATE | REVISION | CHK | APP | DESIGN ENGRG | REFERENCE DRAWINGS | NUMBER | NOTES |
|---|---|---|---|---|---|---|---|---|
| C | 1/89 | TEXT REVISED | | | | | | |
| B | 12/88 | UNDERGROUND RAMP ELIMINATED | | | | | | |
| | | CONSTRUCTION SHAFT MOVED | | | | | | |
| A | 3/88 | ISSUED FOR REPORT | | | | | | |

DESCRIPTION (DO) ACCOUNT
WORK CONDUCTED BY THIS ACCOUNT CHARGED TO (DO) ACCOUNT ABOVE

CONSTRUCTION APPROVAL

APPROVAL | DATE

SCALE NONE | DATE

DESIGNED C. LAUGHTON
DRAWN R. NUNEZ
CHECKED
APPROVED
APPROVED

PROFESSIONAL SEAL

U.S. DEPARTMENT OF ENERGY
SUPERCONDUCTING SUPER COLLIDER

SITE SPECIFIC CONCEPTUAL STUDY
EXPERIMENTAL HALLS AND DETECTORS CASE 5

K2 - NONMAGNETIC DETECTOR
FINISHED HALL
ISOMETRIC AND KEY SECTION

RTK

URA/CDG

CONTRACT DE-AC02-85ER40230 | PROJECT 85122

DRAWING K2-01 | DATE ____ | REV C DATE 5/10/89 | SHEET ____

2611 (142, 512050203.DGN

NUNEZ
12-JUN-1989 11:29

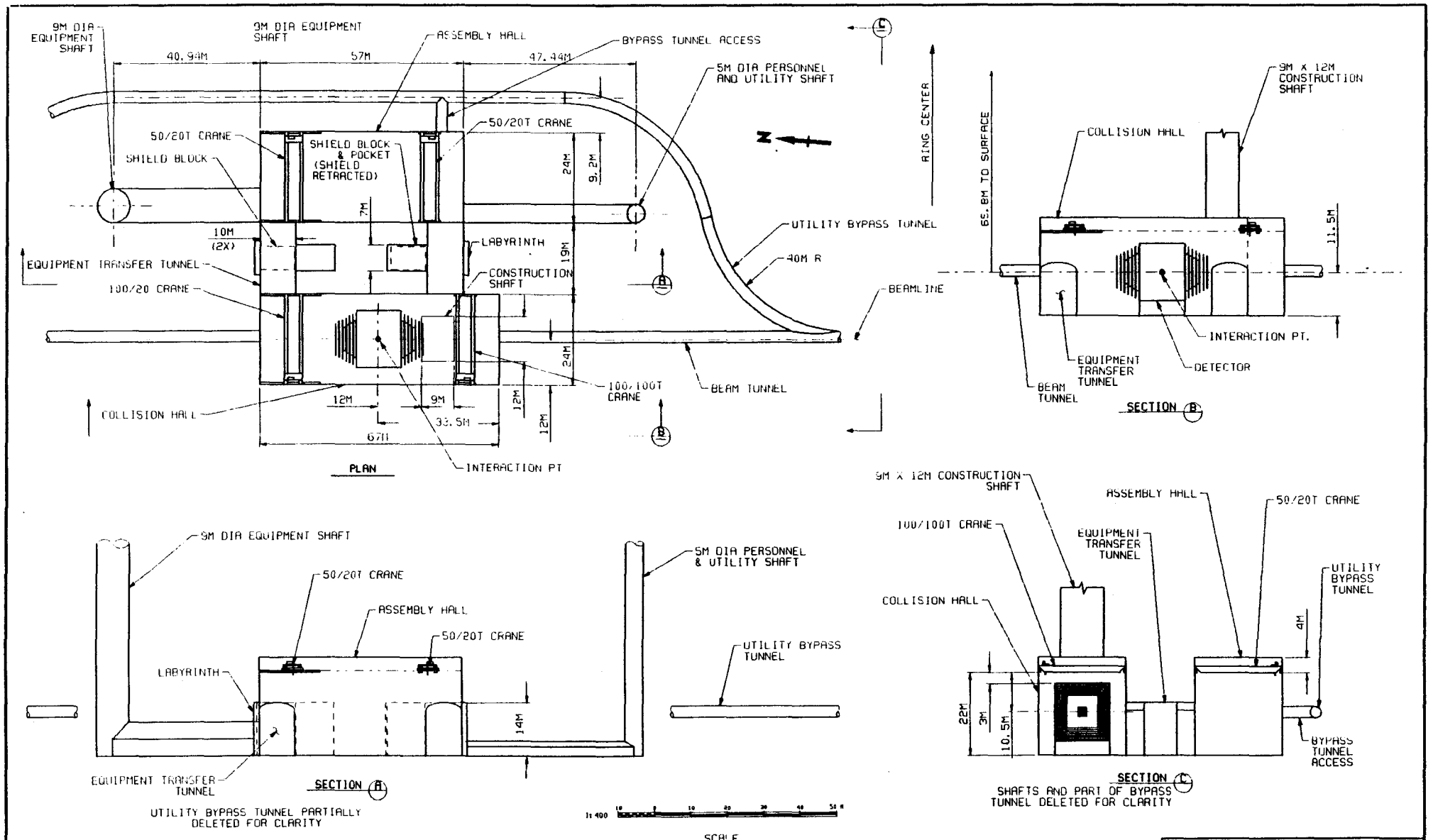


U.S. DEPARTMENT OF ENERGY
SUPERCONDUCTING SUPER COLLIDER

SITE SPECIFIC CONCEPTUAL STUDY
EXPERIMENTAL HALLS AND DETECTORS CASE 5

K2 - NONMAGNETIC DETECTOR
FINISHED HALL
PLAN AND SECTIONS

| REV | DATE | REVISION |
|---|---|---|
| A | SMB | TEXT REVISED |
| B | SMB | CONSTRUCTION SHAFT ADDED |
| | | SHIELDING PROVIDED |
| | | UNDERGROUND RAMP ELIMINATED |
| A | SMB | ISSUED FOR REVIEW |

REFERENCE DRAWINGS | NUMBER | NOTES

DESCRIPTION | COST ACCOUNT
WORK DETAILED BY THIS DRAWING CHARGED TO COST ACCOUNT ABOVE

CONSTRUCTION APPROVAL | APPROVAL | DATE | PROFESSIONAL SEAL

SCALE: 1:400
DRAWN: R. NUNEZ
DATE

RTK

URA/CDG

CONTRACT DE-AC02-85ER40230
PROJECT 85182
DRAWING K2-02
DATE
REV C
DRW 5/10/89
SHEET

261:1182, 85E060:204, DGN 1 NUNEZ 12-JUN-1990 11:24

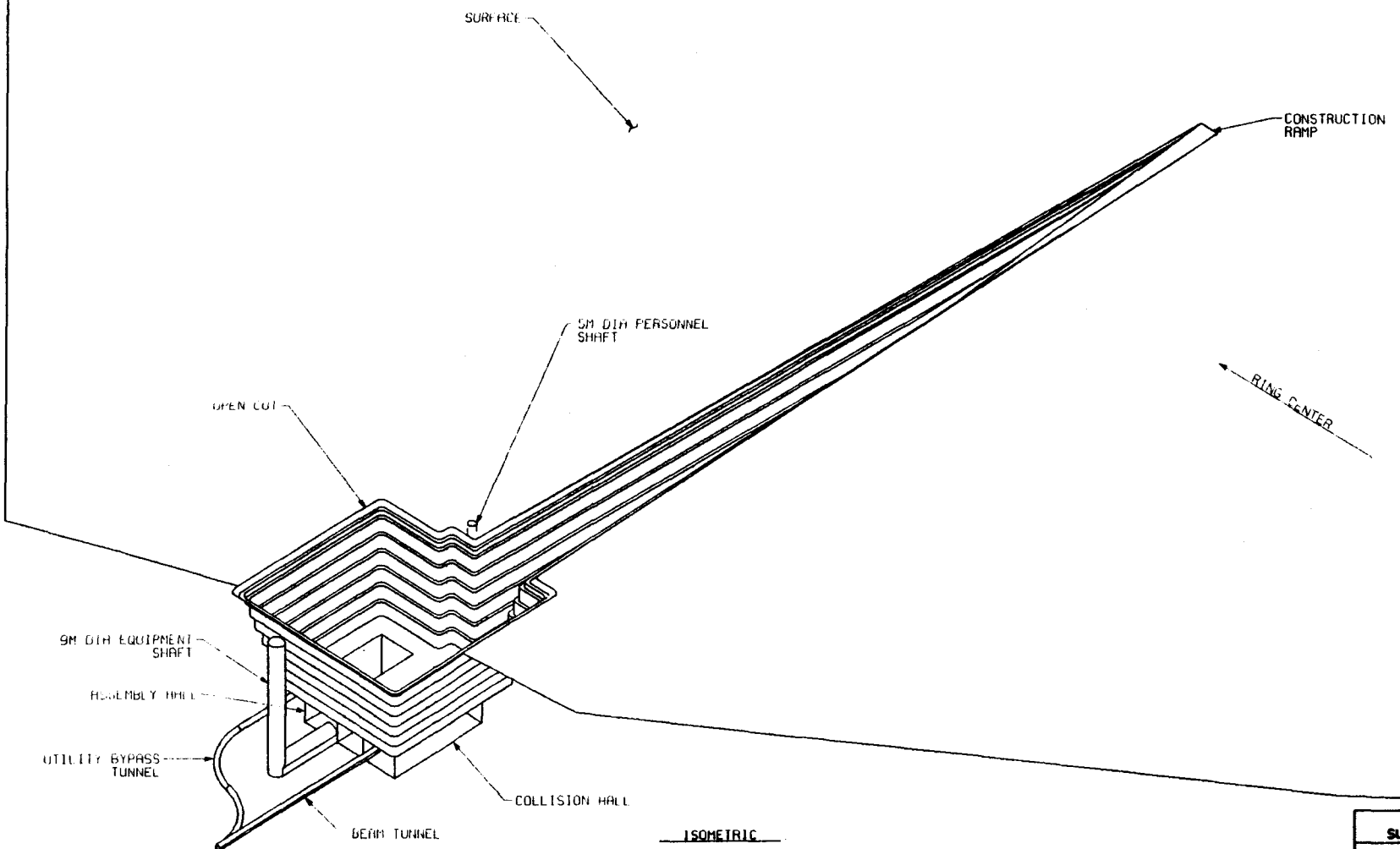


ISOMETRIC

| NO | DATE | REVISION | BY | CHK | APP | APP | REF DWG | REFERENCE DRAWINGS | NUMBER | NOTES |
|---|---|---|---|---|---|---|---|---|---|---|
| 4 | 4/4/89 | EQUIP SHAFT DIA REDUCED TO 9M | | | | | | | | |
| | | UNDERGROUND RAMP ELIMINATED | | | | | | | | |
| 3 | 3/30/89 | ISSUED FOR REVIEW | | | | | | | | |

DESCRIPTION — COST ACCOUNT
ZONE CONTROLS BY THIS ACCOUNT
CHARGED TO COST ACCOUNT ABOVE

CONSTRUCTION APPROVAL

APPROVAL — DATE

SCALE: NONE — DATE
DESIGNED: C. LAUGHTON
DRAWN: R. NUNEZ
CHECKED:
APPROVED:

PROFESSIONAL SEAL

U.S. DEPARTMENT OF ENERGY
SUPERCONDUCTING SUPER COLLIDER

SITE SPECIFIC CONCEPTUAL STUDY
EXPERIMENTAL HALLS AND DETECTORS CASE 5

K2 - NON-MAGNETIC DETECTOR HALL
CUT AND COVER CONSTRUCTION
ISOMETRIC

RTK — Kaiser Engineers Inc. Parsons Brinckerhoff Quade & Douglas Inc. Walter A. Karbon Corp.

URA/CDG

CONTRACT DE-AC02-85ER40230 — PROJECT 85122

DRAWING K2-03 — DATE — REV 8 DATE 4/24/89 — SHEET

Z611 (182, 312856281.DGN
NUNEZ
12-JUN-1989 11:20

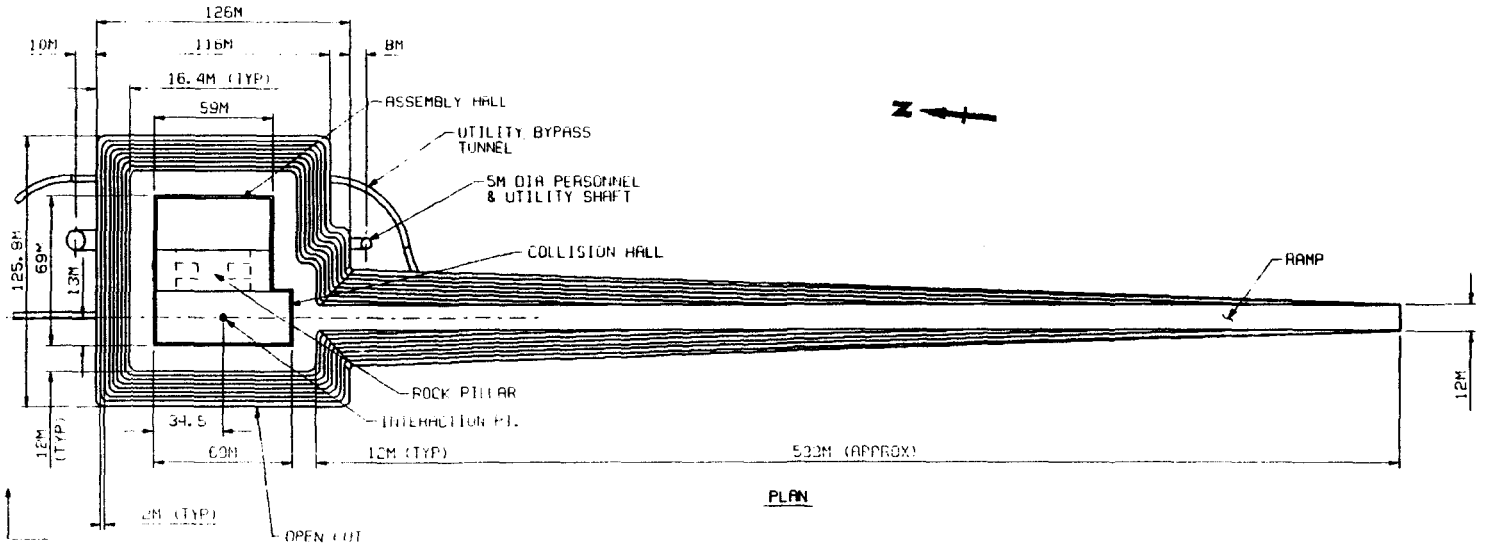


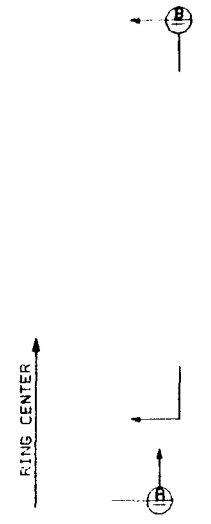


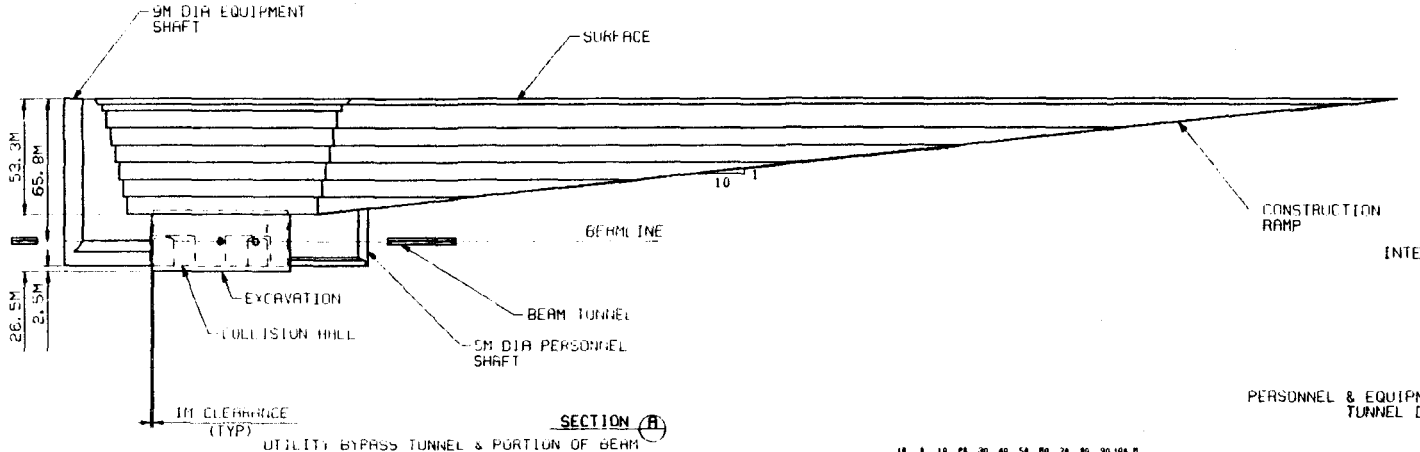


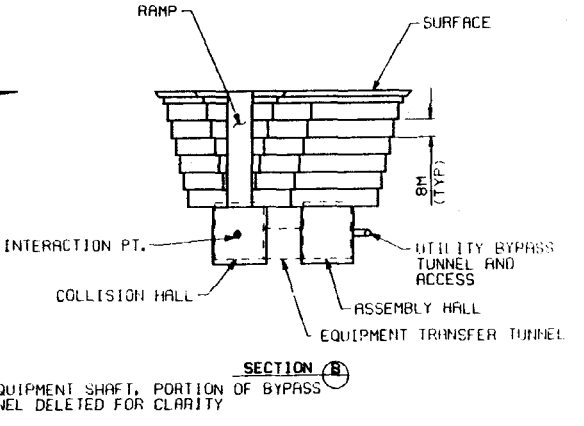


1:1000 SCALE

| NO | DATE | REVISION | BY | APP | APP | REF DWG | REFERENCE DRAWINGS | NUMBER | NOTES |
|---|---|---|---|---|---|---|---|---|---|
| A | 3/2/89 | ISSUED FOR REVIEW | | | | | | | |
| | | UNDERGROUND RAMP ELIMINATED | | | | | | | |
| | 3/2/89 | EQUIP SHAFT DIA REDUCED TO 9M | | | | | | | |
| | 3/2/89 | TEXT REVISED | | | | | | | |

CONSTRUCTION APPROVAL

| APPROVAL | DATE |
|---|---|
| | |

| DATE |
|---|
| |

PROFESSIONAL SEAL

| DESCRIPTION | COST ACCOUNT |
|---|---|
| WORK COVERED BY THIS ACCOUNT CARRIED TO COST ACCOUNT ABOVE | |

SCALE: 1:1000
DRAWN: C. LAUGHTON
CHECKED: A. NUNEZ

U.S. DEPARTMENT OF ENERGY
SUPERCONDUCTING SUPER COLLIDER

SITE SPECIFIC CONCEPTUAL STUDY
EXPERIMENTAL HALLS AND DETECTORS CASE 5

K2 - NON-MAGNETIC DETECTOR HALL
CUT AND COVER CONSTRUCTION
PLAN AND SECTIONS

RTK

URA/CDG

CONTRACT DE-AC02-85ER40230

PROJECT 85122

DRAWING K2-04 DATE ____ REV C DATE 3/10/89 SHEET ____

261: (182, 3120500282, DGN

NUNEZ
12-JUN-1989 11:21

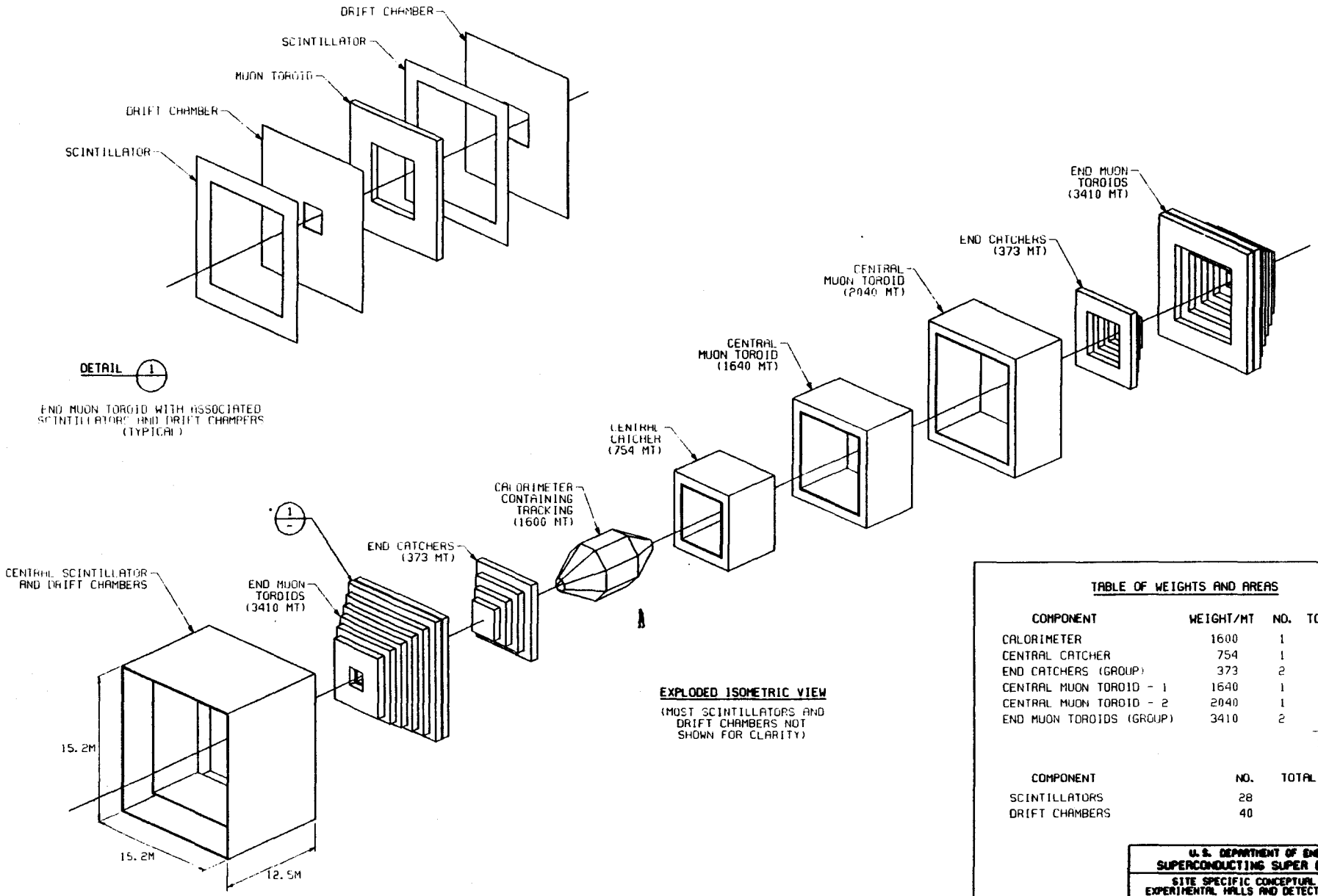


**EXPLODED ISOMETRIC VIEW**

(MOST SCINTILLATORS AND DRIFT CHAMBERS NOT SHOWN FOR CLARITY)

**TABLE OF WEIGHTS AND AREAS**

| COMPONENT | WEIGHT/MT | NO. | TOTAL/MT |
|---|---|---|---|
| CALORIMETER | 1600 | 1 | 1600 |
| CENTRAL CATCHER | 754 | 1 | 754 |
| END CATCHERS (GROUP) | 373 | 2 | 746 |
| CENTRAL MUON TOROID - 1 | 1640 | 1 | 1640 |
| CENTRAL MUON TOROID - 2 | 2040 | 1 | 2040 |
| END MUON TOROIDS (GROUP) | 3410 | 2 | 6820 |
| | | | 13600 |

| COMPONENT | NO. | TOTAL AREA/SQ M |
|---|---|---|
| SCINTILLATORS | 28 | 3103 |
| DRIFT CHAMBERS | 40 | 5157 |

**U.S. DEPARTMENT OF ENERGY**
**SUPERCONDUCTING SUPER COLLIDER**

SITE SPECIFIC CONCEPTUAL STUDY
EXPERIMENTAL HALLS AND DETECTORS CASE 5

K2 - NON-MAGNETIC DETECTOR
EXPLODED ISOMETRIC

| NO | DATE | REVISION | BY | APP | APP | REFERENCE DRAWINGS | NUMBER | NOTES |
|---|---|---|---|---|---|---|---|---|
| 3 | 5/10/89 | TEXT CHANGED | | | | | | |
| 2 | 4/24/89 | AREAS ADDED | | | | | | |
| 1 | 3/30/89 | ISSUED FOR REVIEW | | | | | | |

DESCRIPTION / COST ACCOUNT
WORK COVERED BY THIS REPORT CHARGED TO COST ACCOUNT ABOVE

CONSTRUCTION APPROVAL

| APPROVAL | DATE |
|---|---|
| | |

| CONLG | NONE | DATE |
|---|---|---|
| DESIGNED | M. MARX | 3/1/88 |
| DRAWN | S. HAMILTON | 3/6/88 |
| CHECKED | | |
| APPROVED | | |

PROFESSIONAL SEAL

URA/CDG

CONTRACT DE-AC02-85ER40230

PROJECT 85122

DRAWING K2-05 DATE ____ REV 1 DATE 5/10/89 SHEET ____

2611 1182, 32#600605.DGN

NAME2
12-JUN 1989 11:35

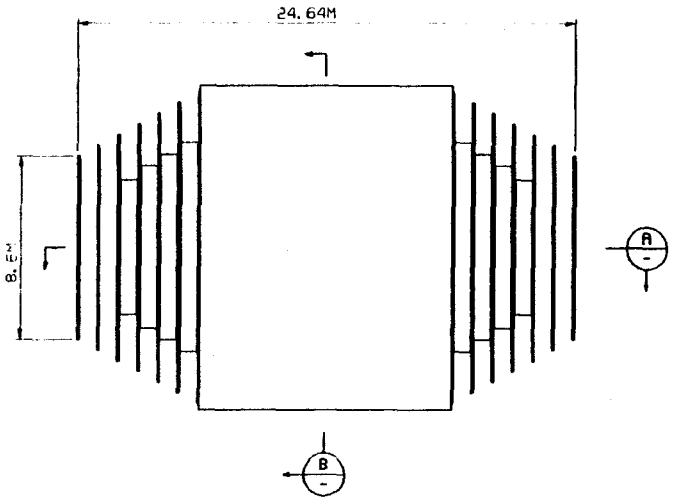


PLAN/ELEVATION

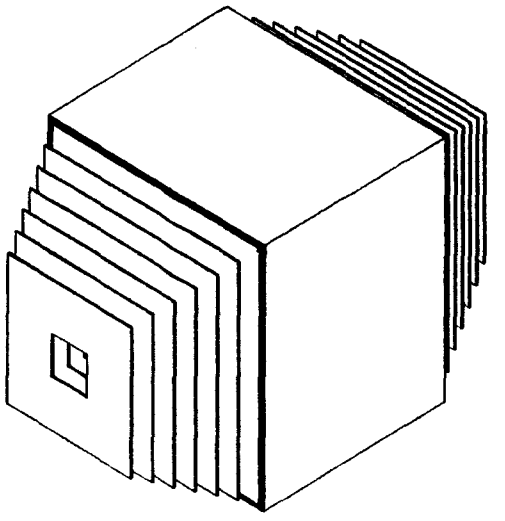

ISOMETRIC VIEW

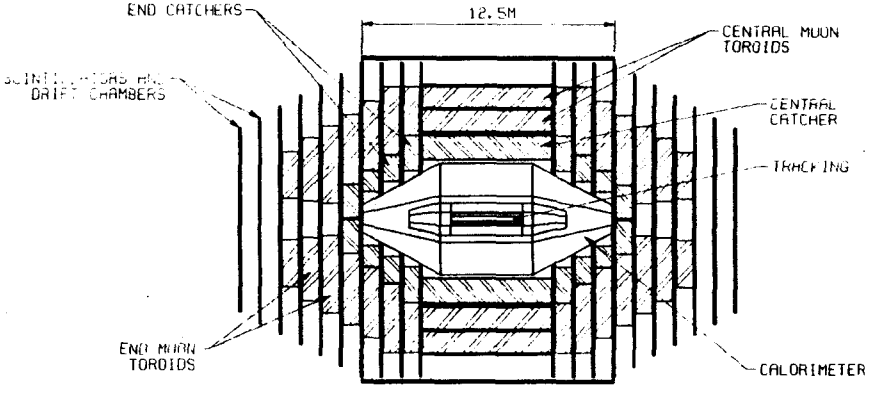


SECTION A

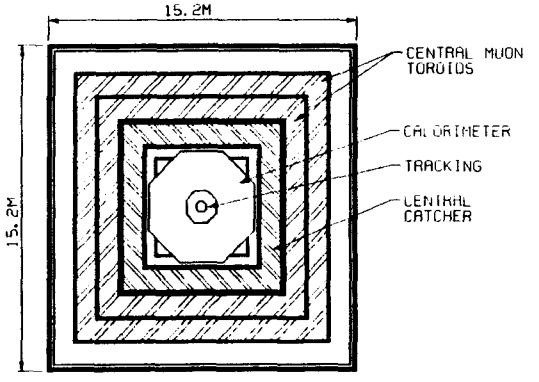


SECTION B

U.S. DEPARTMENT OF ENERGY
SUPERCONDUCTING SUPER COLLIDER

SITE SPECIFIC CONCEPTUAL STUDY
EXPERIMENTAL HALLS AND DETECTORS CASE 5

K2 - NON-MAGNETIC DETECTOR
PLAN AND SECTIONS

URA/CDG

CONTRACT DE-AC02-85ER40230

PROJECT 85122

DRAWING K2-06 DATE ____ REV B DATE 5/10/89 SHEET ____

| NO | DATE | REVISION | BY | APP | APP | DRAWN |
|---|---|---|---|---|---|---|
| B | 5/10/89 | ISSUED FOR REVIEW | | | | |
| A | 3/30/89 | ISSUED FOR REVIEW | | | | |

REFERENCE DRAWINGS | NUMBER | NOTES

DESCRIPTION | COST ACCOUNT
DOES DIFFERS BY THIS REDOWN CORRECTED TO DIST DEPARTMENTS

CONSTRUCTION APPROVAL

APPROVAL | DATE

| | | | DATE |
|---|---|---|---|
| SCALE | 1:100 | | |
| DRAWN | M. MARX | | 2/1/89 |
| CHK | HAMILTON | | 3/6/89 |
| DESIGN | | | |
| APPROVED | | | |
| APPROVED | | | |

PROFESSIONAL SEAL

Z61:[182,312]85002K6.DGN
NUMEZ
12-JUN-1989 11:30

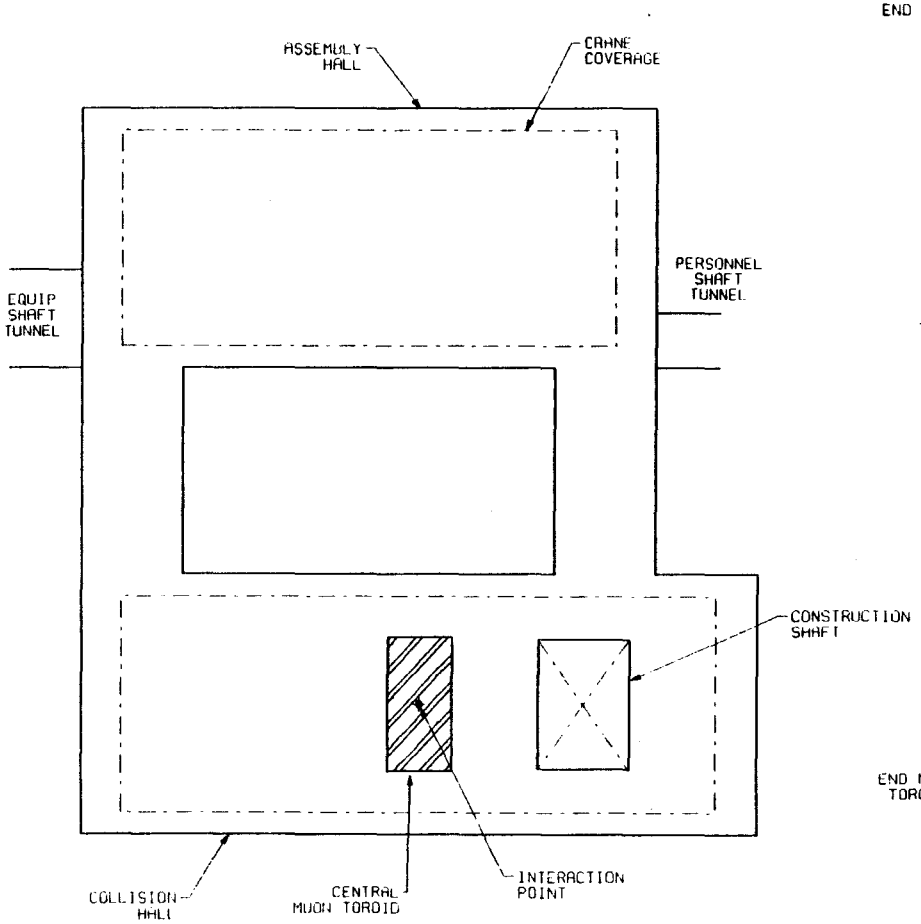


PLAN - ASSEMBLY STEP 1

COLLISION HALL - ASSEMBLE CENTRAL TOROID

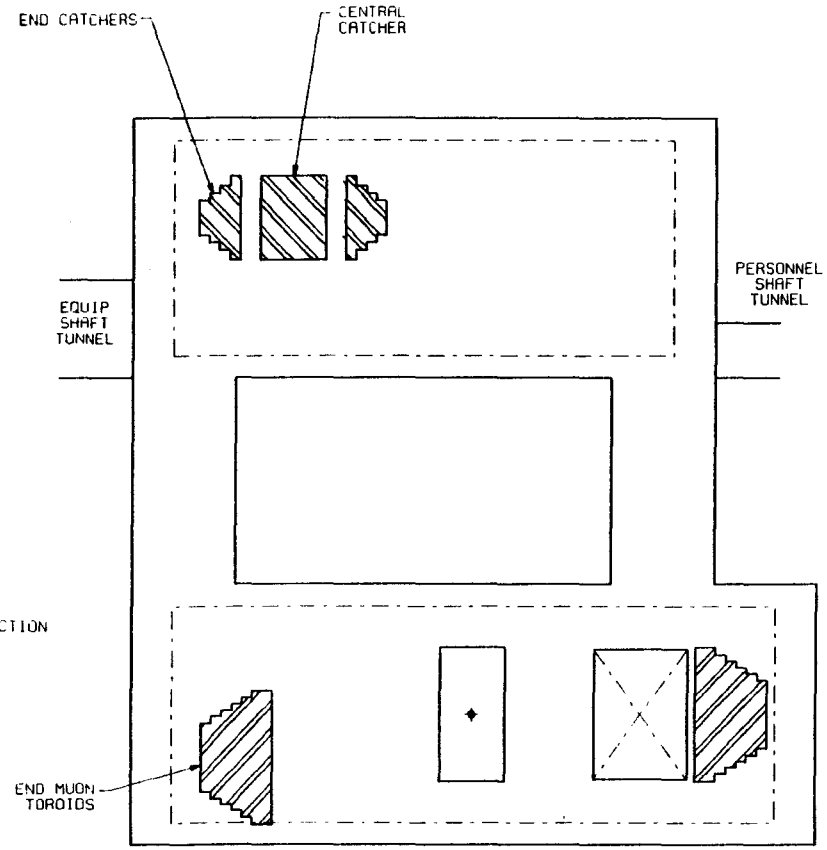


PLAN - ASSEMBLY STEP 2

ASSEMBLY HALL - ASSEMBLE CATCHERS

COLLISION HALL - ASSEMBLE END TOROIDS

U.S. DEPARTMENT OF ENERGY
SUPERCONDUCTING SUPER COLLIDER

SITE SPECIFIC CONCEPTUAL STUDY
EXPERIMENTAL HALLS AND DETECTORS CASE 5

K2 - NON MAGNETIC DETECTOR
DETECTOR ASSEMBLY - STEPS 1 AND 2

RTK

URA/CDG

CONTRACT DE-ACDE-85ER40830

PROJECT 85122

DRAWING K2-07 DATE ____ REV B DATE 5/18/89 SHEET ____

SCALE 1:200

S. HAMILTON 4/3/89

| NO. | DATE | REVISION | BY | APP | APD | BY |
|---|---|---|---|---|---|---|
| 1 | 5/18/89 | TEXT CHANGES | | | | |
| 0 | 4/4/89 | ISSUED FOR REVIEW | | | | |

REFERENCE DRAWING | NUMBER

1. CROSS HATCHING INDICATES COMPONENT UNDER CONSTRUCTION OR ASSEMBLY

NOTES

DESCRIPTION | COST ACCOUNT
WORK COVERED BY THIS DRAWING CHARGED TO COST ACCOUNT ABOVE

CONSTRUCTION APPROVAL | APPROVAL | DATE

PROFESSIONAL SEAL

Z6:E18E, 3120510.07.DGN

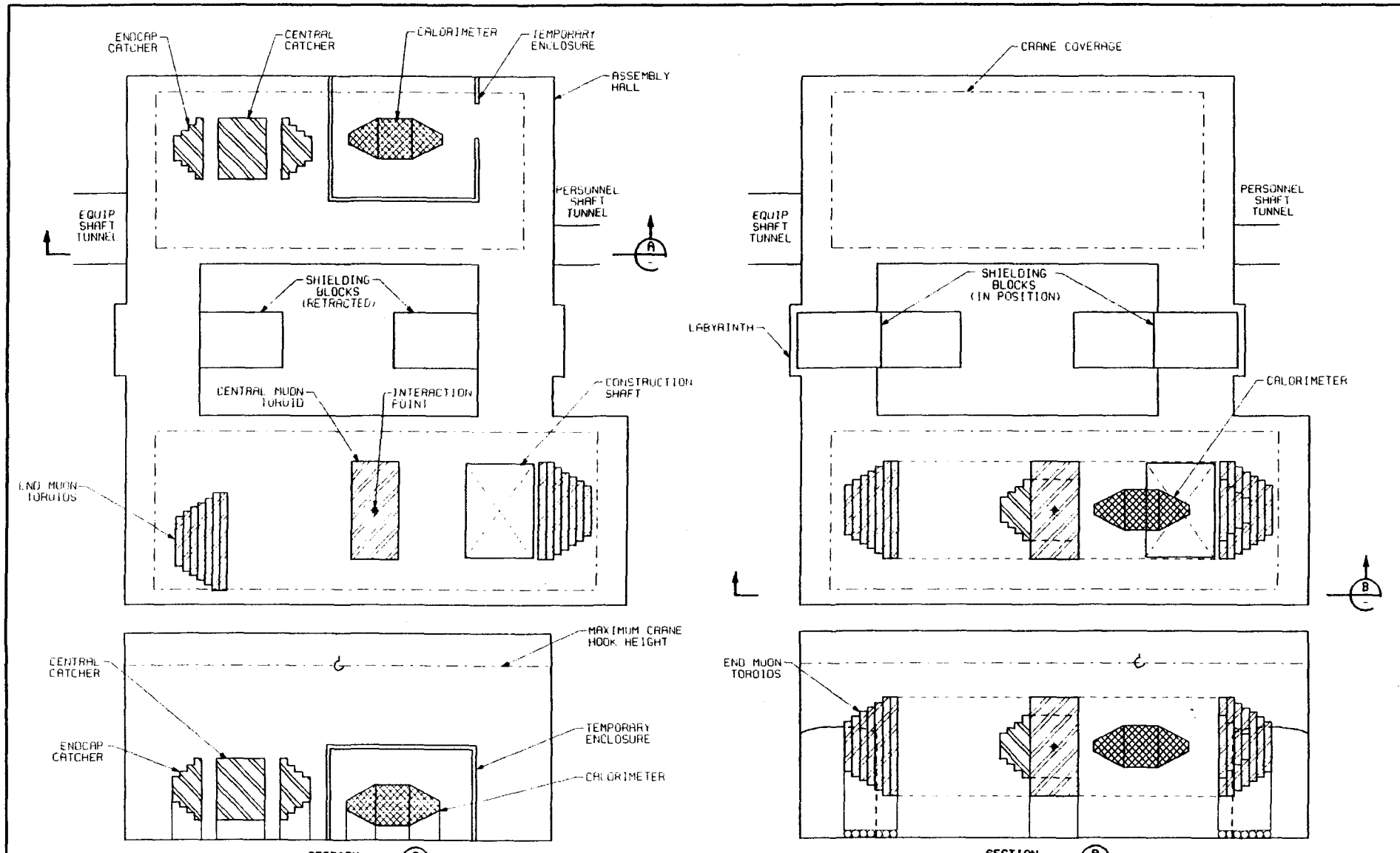


PLAN - ASSEMBLY STEP 3

ASSEMBLY HALL - INSTALL CATCHER CHAMBERS, ASSEMBLE CALORIMETER

COLLISION HALL - INSTALL MUON CHAMBERS

PLAN - ASSEMBLY STEP 4

MOVE CATCHER AND CALORIMETER TO COLLISION HALL AND CLOSE DETECTOR

| NO. | DATE | REVISION | BY | APP | APP | DWG APPROVAL |
|---|---|---|---|---|---|---|
| 2 | 7/10/89 | SHIELDING BLOCKS MODED, TEXT CHANGED | | | | |
| 1 | 6/28/89 | ISSUED FOR REVIEW | | | | |

REFERENCE DRAWINGS | NUMBER

1. CROSS HATCHING INDICATES COMPONENT UNDER CONSTRUCTION OR ASSEMBLY

NOTES

DESCRIPTION | COST ACCOUNT
WORK COVERED BY THIS ACCOUNT CHARGED TO COST ACCOUNT ABOVE

CONSTRUCTION APPROVAL

APPROVAL | DATE

SCALE: 1:200 | DATE
DESIGNED
DRAWN S. HAMILTON 4/3/89
TRACED
CHECKED
APPROVED
APPROVED

PROFESSIONAL SEAL

U.S. DEPARTMENT OF ENERGY
SUPERCONDUCTING SUPER COLLIDER
SITE SPECIFIC CONCEPTUAL STUDY
EXPERIMENTAL HALLS AND DETECTORS CASE 5

K2 - NON MAGNETIC DETECTOR
DETECTOR ASSEMBLY - STEPS 3 AND 4

RJK

URA/CDG

CONTRACT DE-AC08-89ER40830

PROJECT 85182

DRAWING K2-08 | DATE | REV B | DATE 5/10/89 | SHEET

2GIF (102,312850926.DGN) NUNEZ 12-JUN-1989 14:49

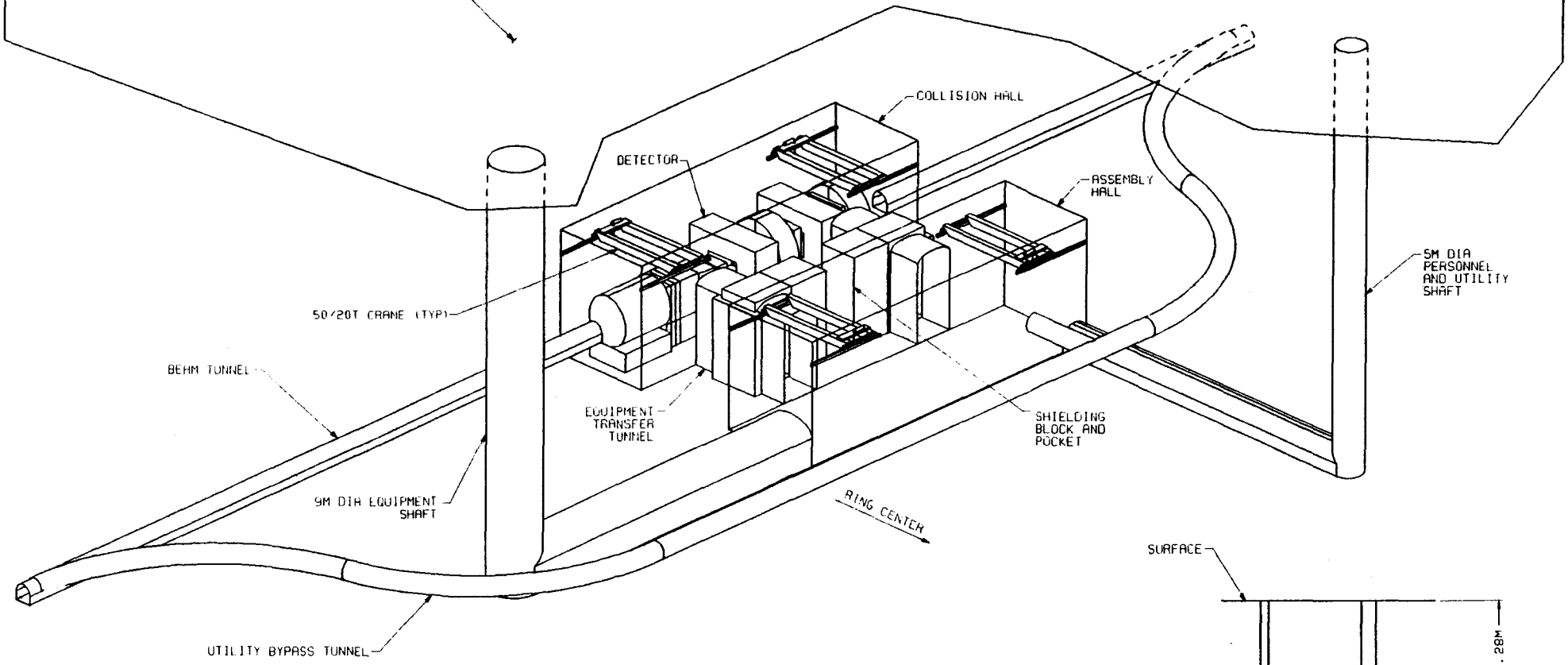


ISOMETRIC VIEW

HALL ROOFS OMITTED FOR CLARITY

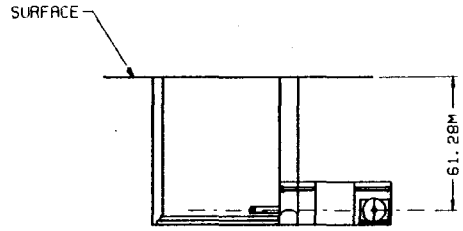


KEY SECTION

| NO | DATE | REVISION | BY | APP | APP |
|---|---|---|---|---|---|
| 4 | | | | | |
| 3 | | | | | |
| 2 | | | | | |
| 1 | | | | | |
| 0 | 5/10/88 | SURFACE MODED, TEXT CHANGED | | | |
| A | 5/9/88 | HALL DIMS & DETECTOR ORIENTATION ALTERED | | | |
| | 3/26/88 | ISSUED FOR REVIEW | | | |

REFERENCE DRAWINGS | NUMBER | NOTES | DESCRIPTION | COST ACCOUNT | CONSTRUCTION APPROVAL | APPROVAL | DATE | SCALE NONE | DATE | PROFESSIONAL SEAL

C. LAUGHTON

R. NUNEZ / S. HAMILTON 1/24/89

U.S. DEPARTMENT OF ENERGY
SUPERCONDUCTING SUPER COLLIDER

CASE 5

K5 - BOTTOM COLLIDER DETECTOR
FINISHED HALL
ISOMETRIC AND KEY SECTION

URA/CDG

CONTRACT DE-AC02-85ER40230 | PROJECT 85122

DRAWING K5-01 | DATE | E 5/10/88 | SHEET

Z611(142,3127500203.DGN NUNEZ 12-JUN-1989 11:44

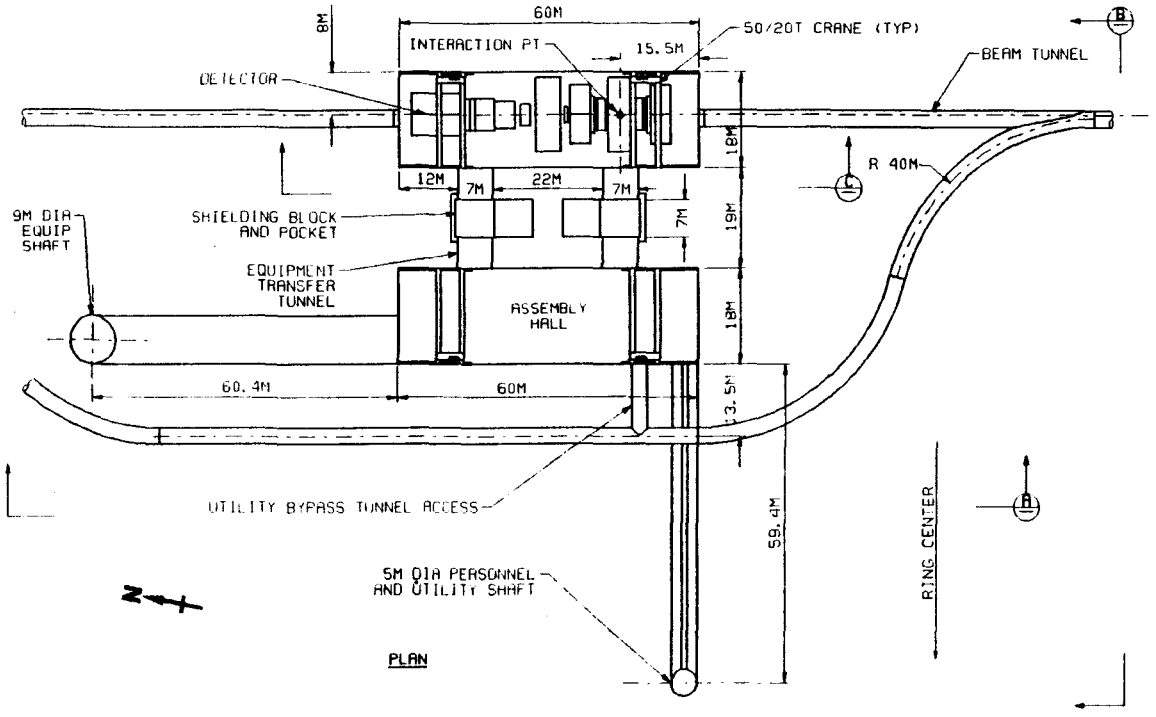


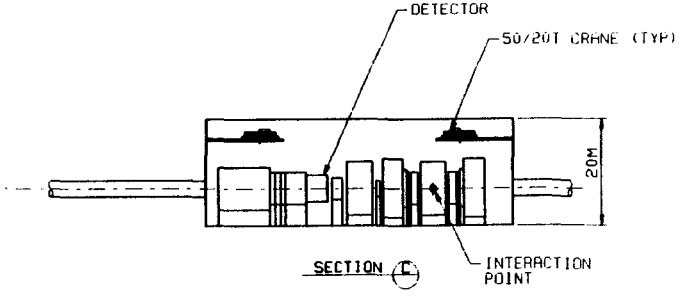


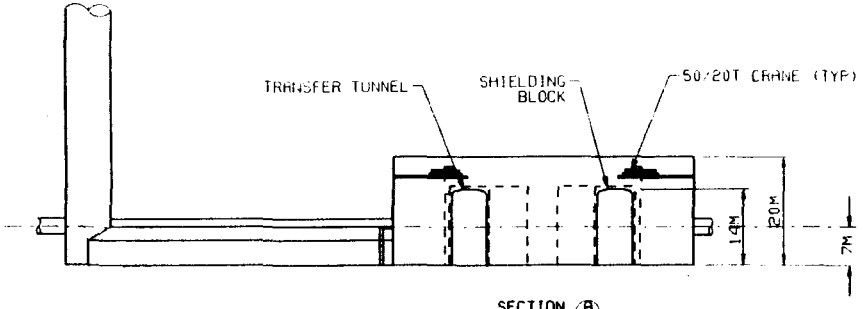


BYPASS TUNNEL AND PERSONNEL SHAFT NOT SHOWN FOR CLARITY. SHIELDING BLOCKS SHOWN IN OPERATING POSITION.

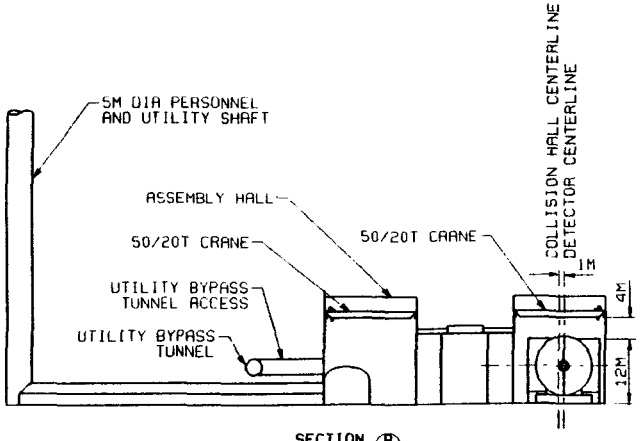


EQUIP SHAFT AND PARTS OF BYPASS TUNNEL DELETED FOR CLARITY

1:400 10 0 10 20 30 40 50 M

U.S. DEPARTMENT OF ENERGY
SUPERCONDUCTING SUPER COLLIDER

SITE SPECIFIC CONCEPTUAL STUDY
EXPERIMENTAL HALLS AND DETECTORS CASE 5

K5 - BOTTOM COLLIDER DETECTOR
FINISHED HALL
PLAN AND SECTIONS

URA/CDG

CONTRACT DE-AC02-85ER40230 | PROJECT 85128

DRAWING K5-02 | DATE | REV. C | DATE 5/16/88 | SHEET

SCALE 1:400
DRAWN E. LAUGHTON
A. NUNEZ / G. HAMILTON

| NO. | DATE | REVISION | BY | APP | CHK | REFERENCE DRAWINGS | NUMBER | NOTES |
|---|---|---|---|---|---|---|---|---|
| C | 5/16/88 | SECTION C AND CRANES ADDED | | | | | | |
| B | 4/29/88 | HALL DIMENSIONS AND DETECTOR ORIENTATION | | | | | | |
| A | 3/30/88 | ISSUED FOR REVIEW | | | | | | |

DESCRIPTION | COST ACCOUNT
WORK CONTRACTED BY THIS ACCOUNT CHARGED TO COST ACCOUNT ABOVE

CONSTRUCTION APPROVAL | APPROVAL | DATE | DATE | PROFESSIONAL SEAL

2611 11M, 3127500204.DGN
NUNEZ
12-JUN-1989 11:46

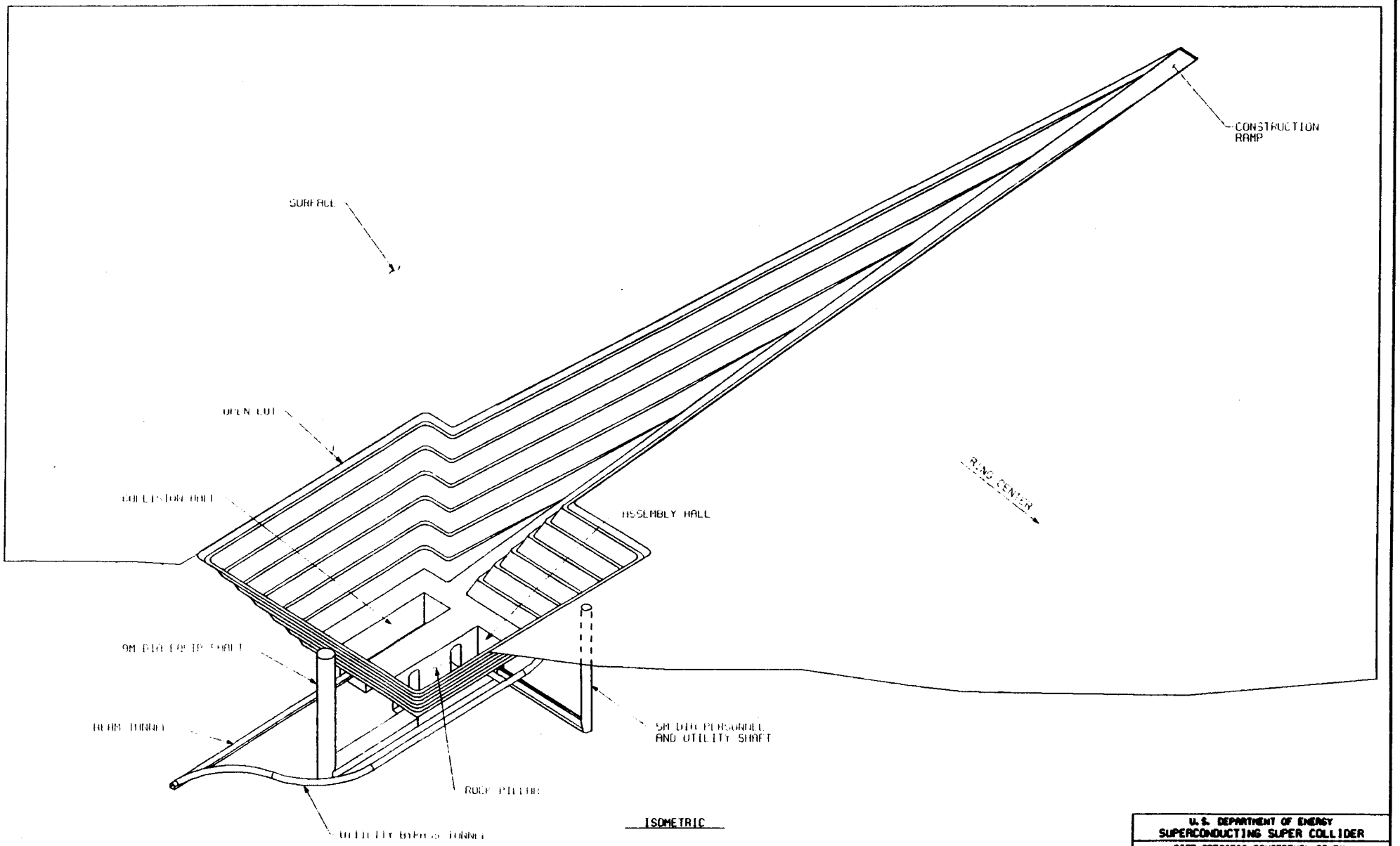


ISOMETRIC

U.S. DEPARTMENT OF ENERGY
SUPERCONDUCTING SUPER COLLIDER

SITE SPECIFIC CONCEPTUAL STUDY
EXPERIMENTAL HALLS AND DETECTORS

K5 - BOTTOM COLLIDER DETECTOR
CUT AND COVER CONSTRUCTION
ISOMETRIC

RTK

URA/CDG

CONTRACT DE-AC02-85ER40230

PROJECT 85122

DRAWING K5-03 | DATE | REV C | DATE 5/10/89 | SHEET

SCALE NONE

L. LAUGHTON

CONSTRUCTION APPROVAL

PROFESSIONAL SEAL

12-JUN-1989 11:52

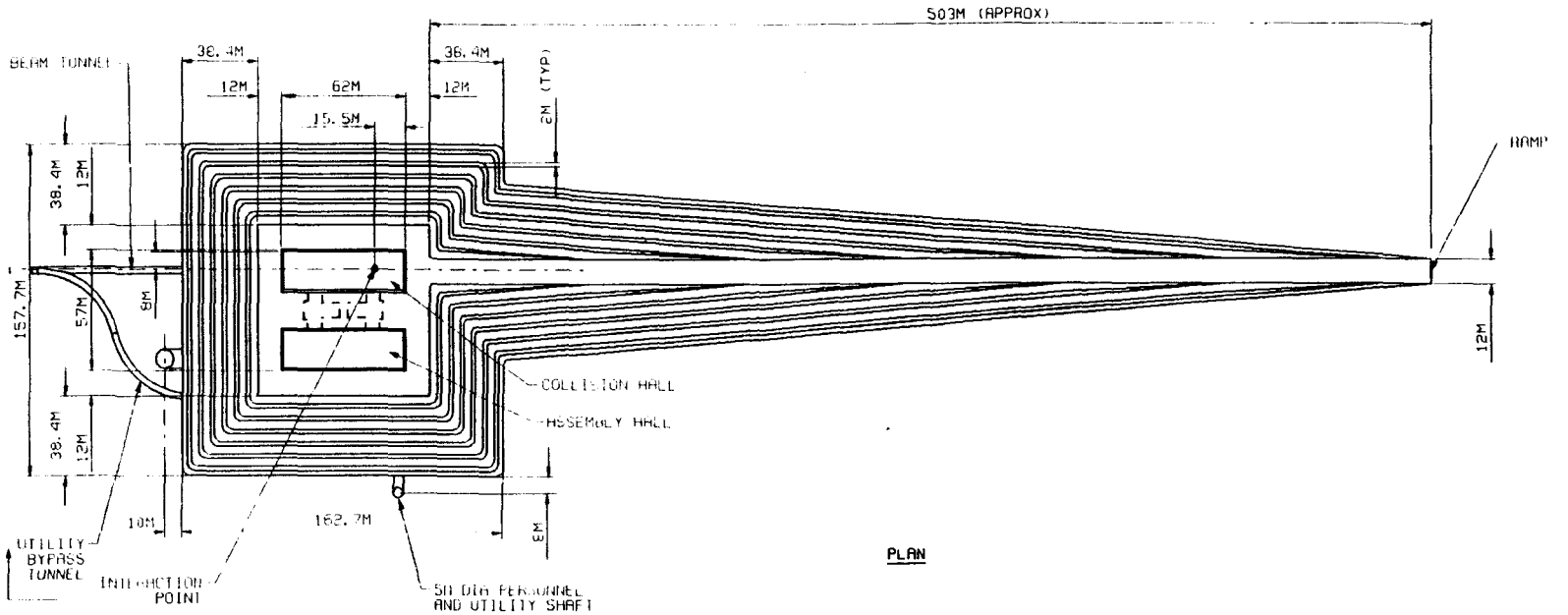


PLAN

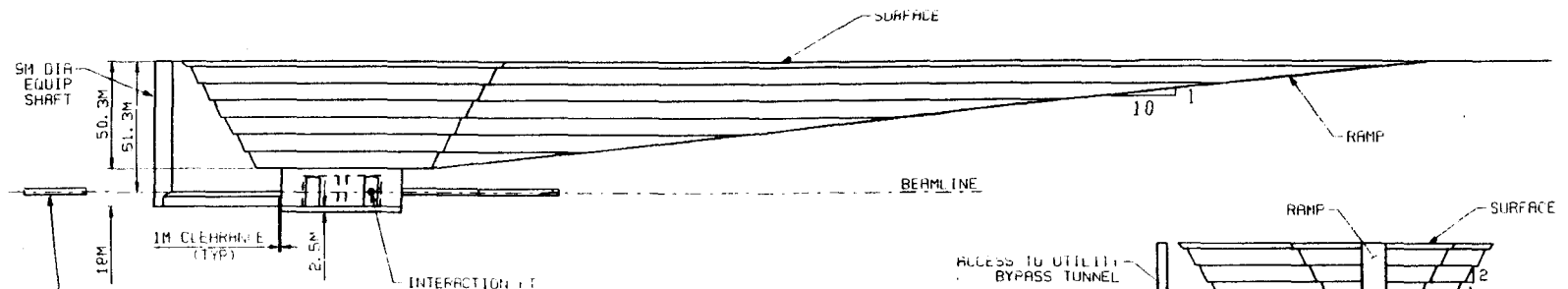


SECTION (A)

UTILITY BYPASS TUNNEL AND PERSONNEL SHAFT DELETED FOR CLARITY

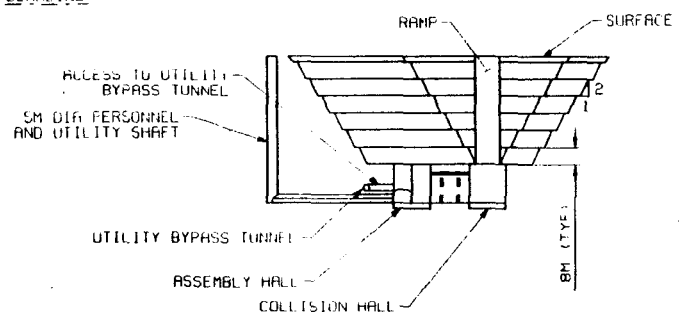


SECTION (B)

PART OF BYPASS TUNNEL DELETED FOR CLARITY

1:1000

SCALE

| NO | DATE | REVISION | BY | APP | REF | REF DWG |
|---|---|---|---|---|---|---|
| | 5/10/90 | TEXT CHANGES | | | | |
| | 5/24/90 | HALL AND PIT DIMENSIONS MODIFIED | | | | |
| | 5/30/90 | ISSUED FOR REVIEW | | | | |

REFERENCE DRAWINGS | NUMBER | NOTES

DESCRIPTION | COST ACCOUNT
WORK CONTENTS W/ THIS ACCOUNT
CORRECT TO COST ACCOUNT CODE

CONSTRUCTION APPROVAL

APPROVAL | DATE | SCALE 1:1000 | DATE
DESIGNED C. LAURATION
DRAWN A. NUNEZ / S. HAMILTON 3/24/90
CHECKED
APPROVED
APPROVED

PROFESSIONAL SEAL

**U.S. DEPARTMENT OF ENERGY**
**SUPERCONDUCTING SUPER COLLIDER**

**SITE SPECIFIC CONCEPTUAL STUDY**
**EXPERIMENTAL HALLS AND DETECTORS CASE 5**

K5 - BOTTOM COLLIDER DETECTOR HALL
CUT AND COVER CONSTRUCTION
PLAN AND SECTIONS

RTK

URA/CDG

CONTRACT DE-AC02-85ER40230 | PROJECT 85122

DRAWING K5-04 | DATE | REV C | DATE 5/10/90 | SHEET

26:(1162,32)750DFOC.DGN NUNEZ 12-JUN-1990 11:56

## TABLE OF WEIGHTS

| COMPONENT | WEIGHT/MT | NO. | TOTAL/MT |
|---|---|---|---|
| MAGNET 1 | 4500 | | 4500 |
| MAGNET 2 | 4500 | | 4500 |
| MUON STEEL 1 | 650 | | 650 |
| MUON STEEL 1' | 650 | | 650 |
| MUON STEEL 2 | 1800 | | 1800 |
| EM 1' | 55 | | 55 |
| EM 1 | 55 | | 55 |
| EM 2 | 75 | | 75 |
| | | | 12285 |

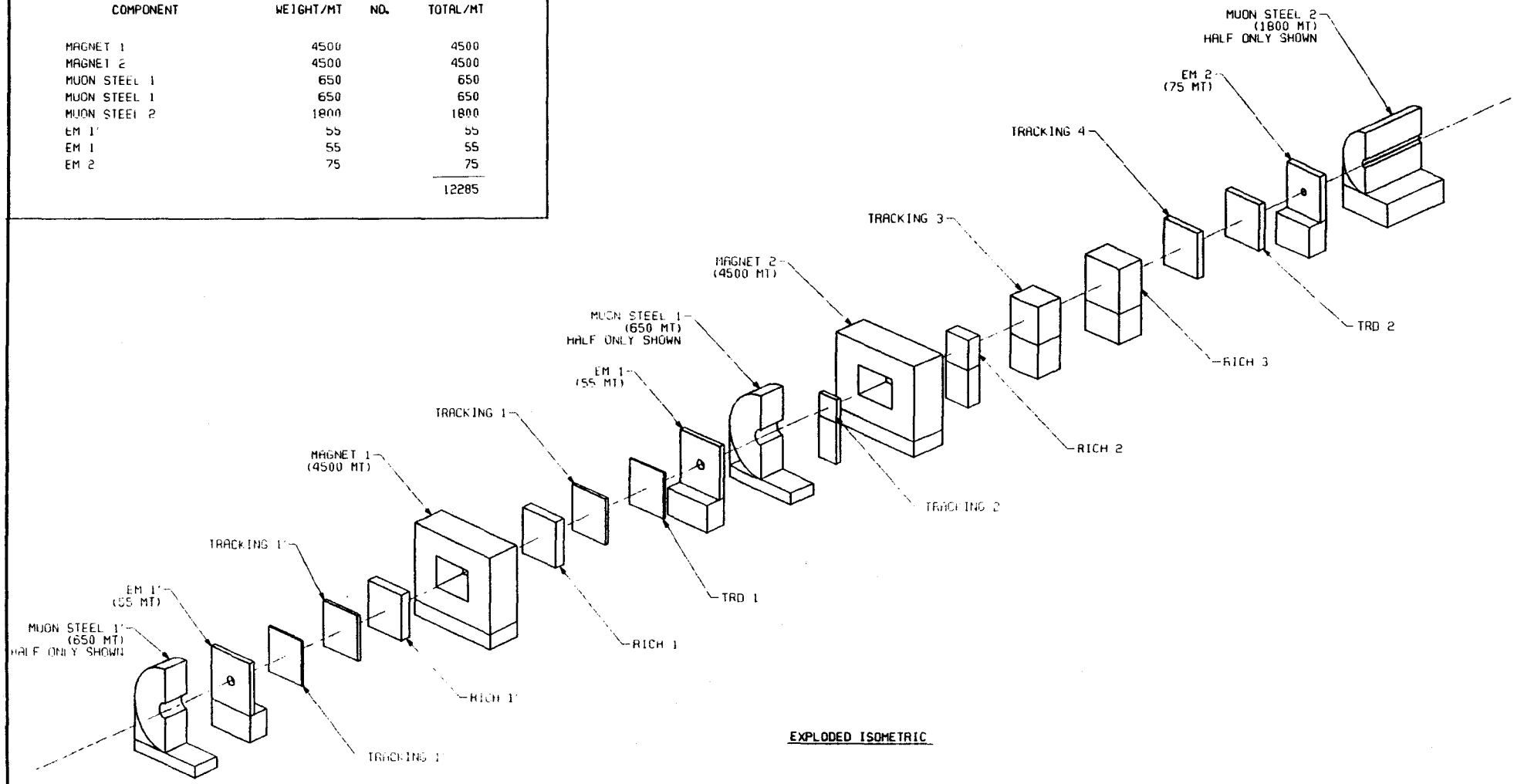


EXPLODED ISOMETRIC

| NO | DATE | REVISION | BY | CHK | APP | R/P | E&M WORK | REFERENCE DRAWINGS | NUMBER | NOTES |
|---|---|---|---|---|---|---|---|---|---|---|
| 1A | 5/13/88 | WEIGHTS ADDED, EQUIPMENT NAMES REVISED | | | | | | | | |
| A | 1/29/88 | ISSUED FOR REVIEW | | | | | | | | |

DESCRIPTION — COST ACCOUNT
WORK COVERED B THIS ACCOUNT
CHARGED TO COST ACCOUNT ABOVE

CONSTRUCTION APPROVAL | APPROVAL | DATE | DATE | PROFESSIONAL SEAL

SCALE: NO SCALE
DESIGNED: M. TERRY
DRAWN: R. NUNEZ
CHECKED:
APPROVED:

U.S. DEPARTMENT OF ENERGY
SUPERCONDUCTING SUPER COLLIDER

SITE SPECIFIC CONCEPTUAL STUDY
EXPERIMENTAL HALLS AND DETECTORS CASE 5

K5 - BOTTOM COLLIDER SPECTROMETER
EXPLODED ISOMETRIC

RTK — URA/CDG

CONTRACT DE-AC02-85ER40830 | PROJECT 05122

DRAWING K5-05 | DATE | REV 0 DATE 5/16/88 | SHEET

Z:\ (192.3105500205.DGN NUNEZ 12-JUN-1988 11:59

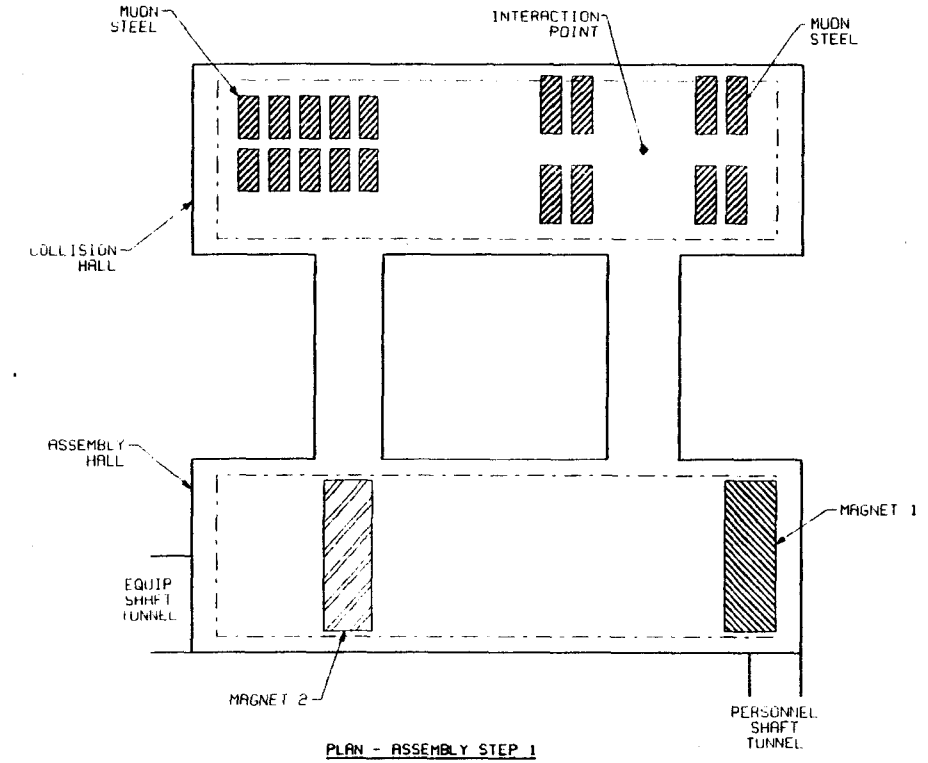


**PLAN - ASSEMBLY STEP 1**

ASSEMBLY HALL - ASSEMBLE MAGNETS 1 AND 2
COLLISION HALL - ASSEMBLE MUON STEEL

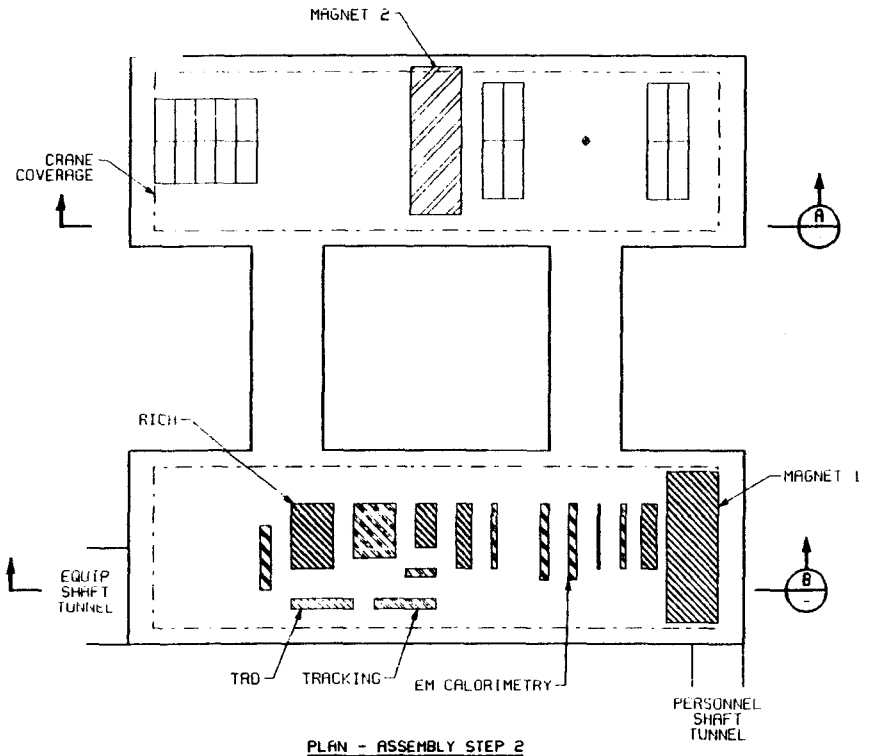


**PLAN - ASSEMBLY STEP 2**

ASSEMBLY HALL - ASSEMBLE CALORIMETER, TRACKING, ETC.
COLLISION HALL - INSTALL MAGNET 2

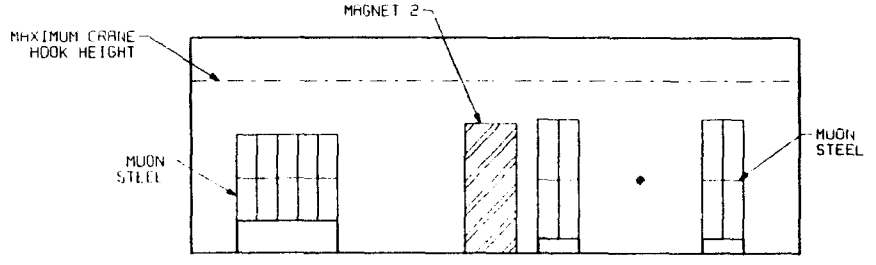


**SECTION A**

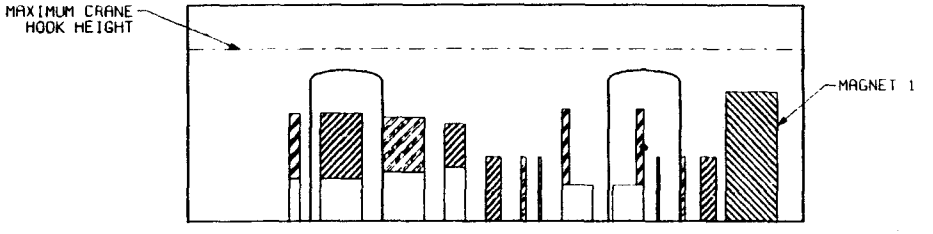


**SECTION B**

| NO | DATE | REVISION | BY | CHK | APP | REF DWG | REFERENCE DRAWING | NUMBER |
|---|---|---|---|---|---|---|---|---|
| | 3/15/89 | TEXT MODIFIED | | | | | | |
| | 8/24/88 | MAGNET 2 ENLARGED, TEXT, HALL GEOMETRY AND DETECTOR ORIENTATION MODIFIED | | | | | | |
| | 3/15/89 | ISSUED FOR REVIEW | | | | | | |

1. CROSS HATCHING INDICATES COMPONENTS UNDER CONSTRUCTION OR ASSEMBLY

NOTES

| DESCRIPTION | COST ACCOUNT |
|---|---|
| WORK COVERED BY THIS ACCOUNT CHARGED TO COST ACCOUNT ABOVE | |

CONSTRUCTION APPROVAL

| APPROVAL | DATE |
|---|---|
| DESIGNED | |
| DRAWN | |
| CHKD | |
| APPROVED | |
| APPROVED | |
| APPROVED | |

| SCALE: | 1:250 | DATE |
|---|---|---|
| DESIGNED | W. TERAY | 3/15/89 |
| DRAWN | A. NUNEZ | 3/15/89 |

PROFESSIONAL SEAL

U.S. DEPARTMENT OF ENERGY
SUPERCONDUCTING SUPER COLLIDER

SITE SPECIFIC CONCEPTUAL STUDY
EXPERIMENTAL HALLS AND DETECTORS CASE 5

K5 - BOTTOM COLLIDER DETECTOR
DETECTOR ASSEMBLY - STEPS 1 AND 2

RTK Rainer Engineers Inc. Rainer Engineering Concepts Keller & Sanker Group

URA/CDG

CONTRACT DE-AC02-85ER40230

PROJECT 85102

DRAWING K5-06 DATE ____ REV 0 DATE 3/15/89 SHEET ____

Z61: [102,310564026.DGN] NUNEZ 12-JUN-1989 12:01

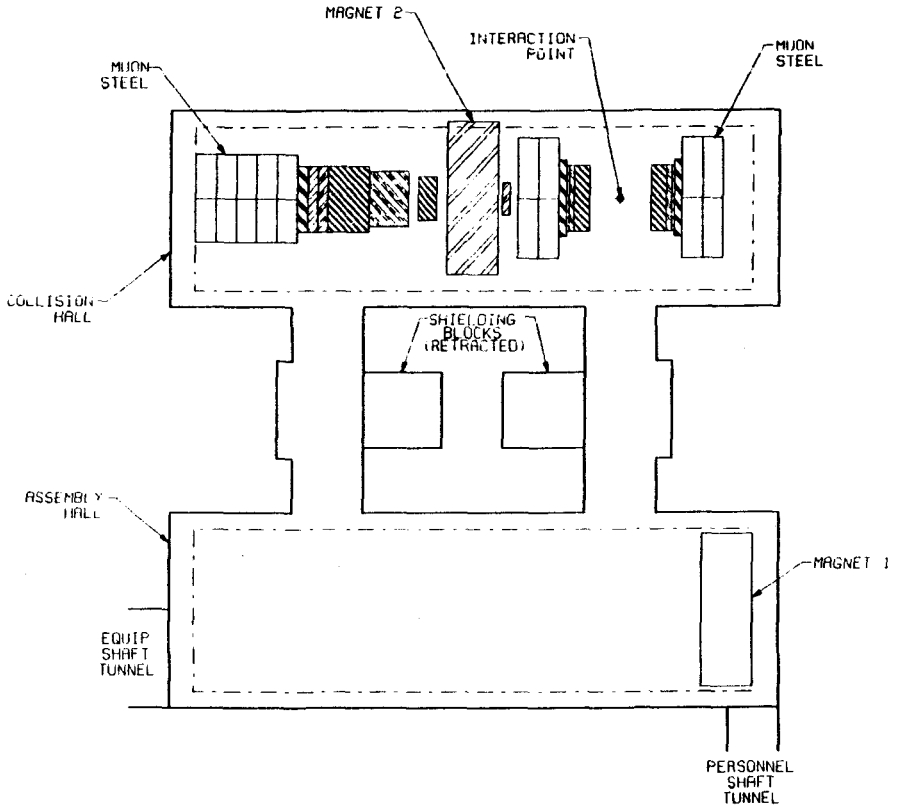


PLAN - ASSEMBLY STEP 3

COLLISION HALL - INSTALL CALORIMETER, TRACKING ETC.

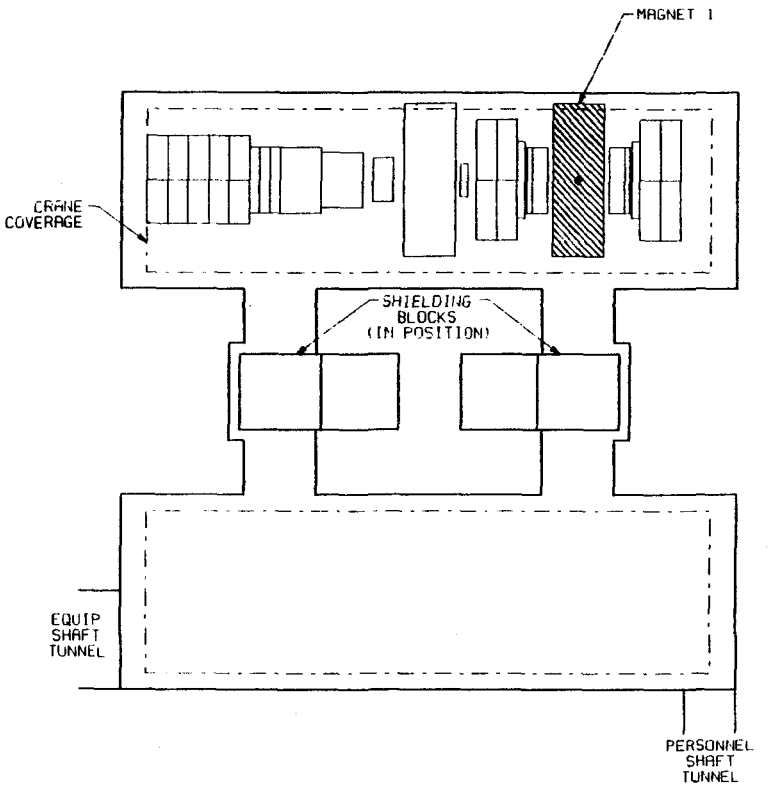


PLAN - ASSEMBLY STEP 4

INSTALL MAGNET 1

| NO. | DATE | REVISION | BY | CHK | APP | APP | DATE APPROVED |
|---|---|---|---|---|---|---|---|
| | 5/18/90 | SHIELDING BLOCKS MODED | | | | | |
| | 4/26/90 | DETECTOR ORIENTATION AND HALL GEOMETRY | | | | | |
| | 3/30/90 | ISSUED FOR REVIEW | | | | | |

REFERENCE DRAWINGS

NUMBER

NOTES: 1. CROSS HATCHING INDICATES COMPONENTS UNDER CONSTRUCTION OR ASSEMBLY

DESCRIPTION — COST ACCOUNT
WORK COVERED BY THIS ACCOUNT CHARGED TO COST ACCOUNT NUMBER

CONSTRUCTION APPROVAL

APPROVAL | DATE

| | | |
|---|---|---|
| SCALE | 1:200 | DATE |
| DESIGNED | M. TERRY | 3/13/90 |
| DRAWN | R. NUNEZ | 3/15/90 |
| CHECKED | | |
| APPROVED | | |

PROFESSIONAL SEAL

U.S. DEPARTMENT OF ENERGY
SUPERCONDUCTING SUPER COLLIDER

SITE SPECIFIC CONCEPTUAL STUDY
EXPERIMENTAL HALLS AND DETECTORS CASE 5

K5 - BOTTOM COLLIDER DETECTOR
DETECTOR ASSEMBLY - STEPS 3 AND 4

RTK

URA/CDG

CONTRACT DE-AC02-85ER40230

PROJECT 05122

DRAWING K5-07 | DATE | REV E | DATE 5/18/90 | SHEET

Z64 (IBC, 3305540207.DGN

NUNEZ
12-JUN-1989 12:04

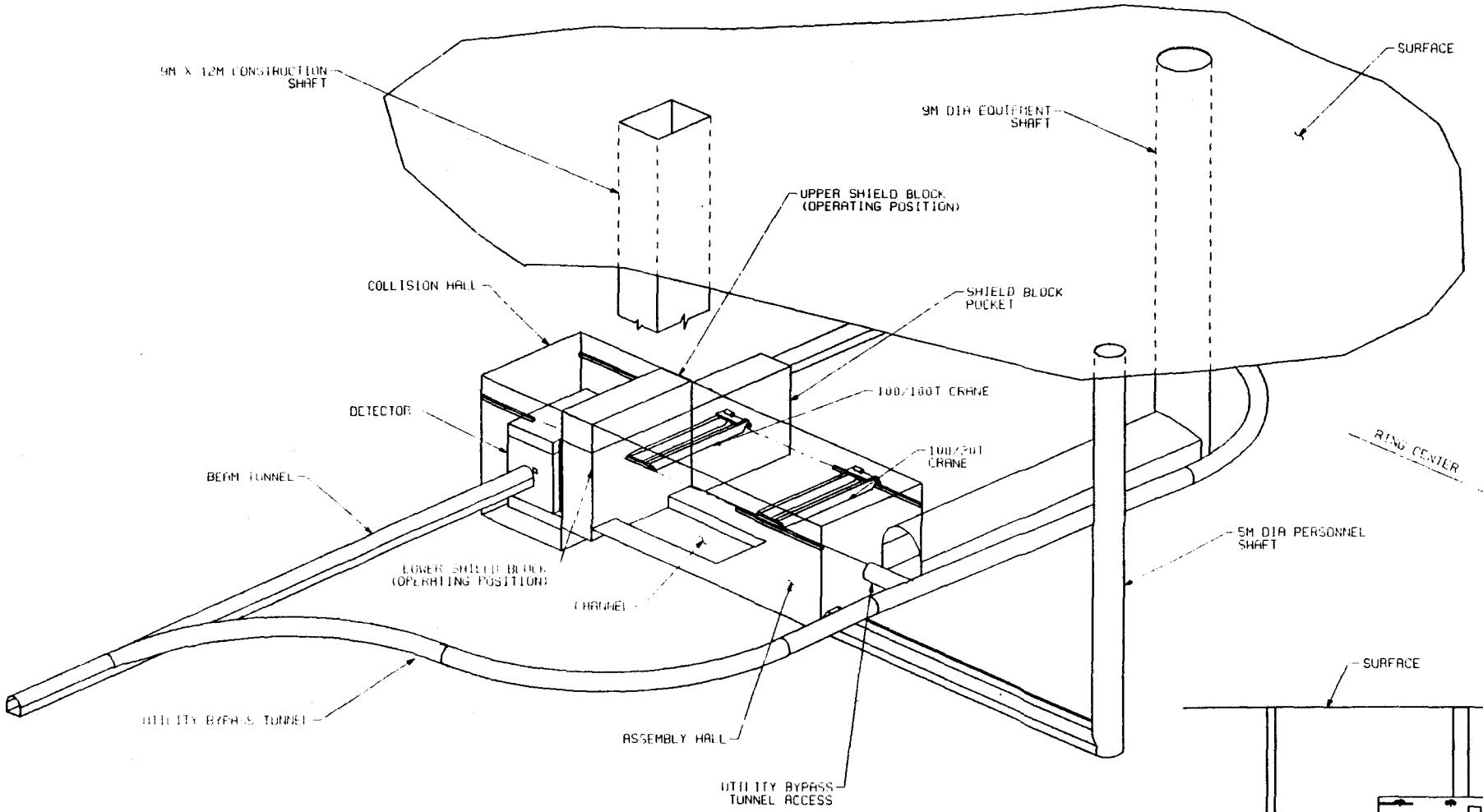


ISOMETRIC

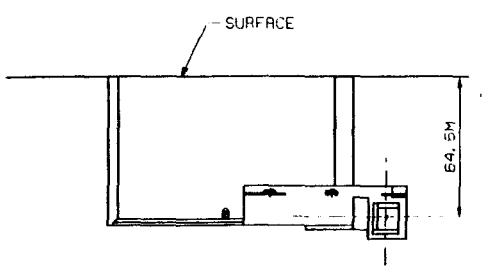


KEY SECTION

| NO. | DATE | REVISION | BY | APP | REF | REFERENCE DRAWINGS | NUMBER | NOTES |
|---|---|---|---|---|---|---|---|---|
| 5 | 5/10/89 | TEXT REVISED | | | | | | |
| 4 | 4/10/89 | SHIELDING PROVIDED | | | | | | |
| 3 | | UNDERGROUND RAMP ELIMINATED | | | | | | |
| 2 | 3/3/88 | ISSUED FOR REVIEW | | | | | | |

| DESCRIPTION | COST ACCOUNT |
|---|---|
| WORK COVERED BY THIS ACCOUNT | |
| CHARGED TO (SUB) ACCOUNT ABOVE | |

CONSTRUCTION APPROVAL

| APPROVAL | DATE |
|---|---|
| | |

| | | DATE |
|---|---|---|
| SCALE | NONE | |
| DRAWN | R. HARRIS/V. TERRY | |
| TRACED | R. NUNEZ | |
| CHECKED | | |
| APPROVED | | |
| APPROVED | | |

PROFESSIONAL SEAL

U.S. DEPARTMENT OF ENERGY
SUPERCONDUCTING SUPER COLLIDER

SITE SPECIFIC CONCEPTUAL STUDY
EXPERIMENTAL HALLS AND DETECTORS CASE 5

K6 - D0 DETECTOR UPGRADE
FINISHED HALL
ISOMETRIC AND KEY SECTION

RTK

URA/CDG

CONTRACT DE-AC02-85ER40230 | PROJECT 85122

DRAWING K6-01 | DATE | REV C | DATE 5/10/89 | SHEET -

Z61:(162,317650203).DGN NUNEZ 12-JUN-1988 16:06

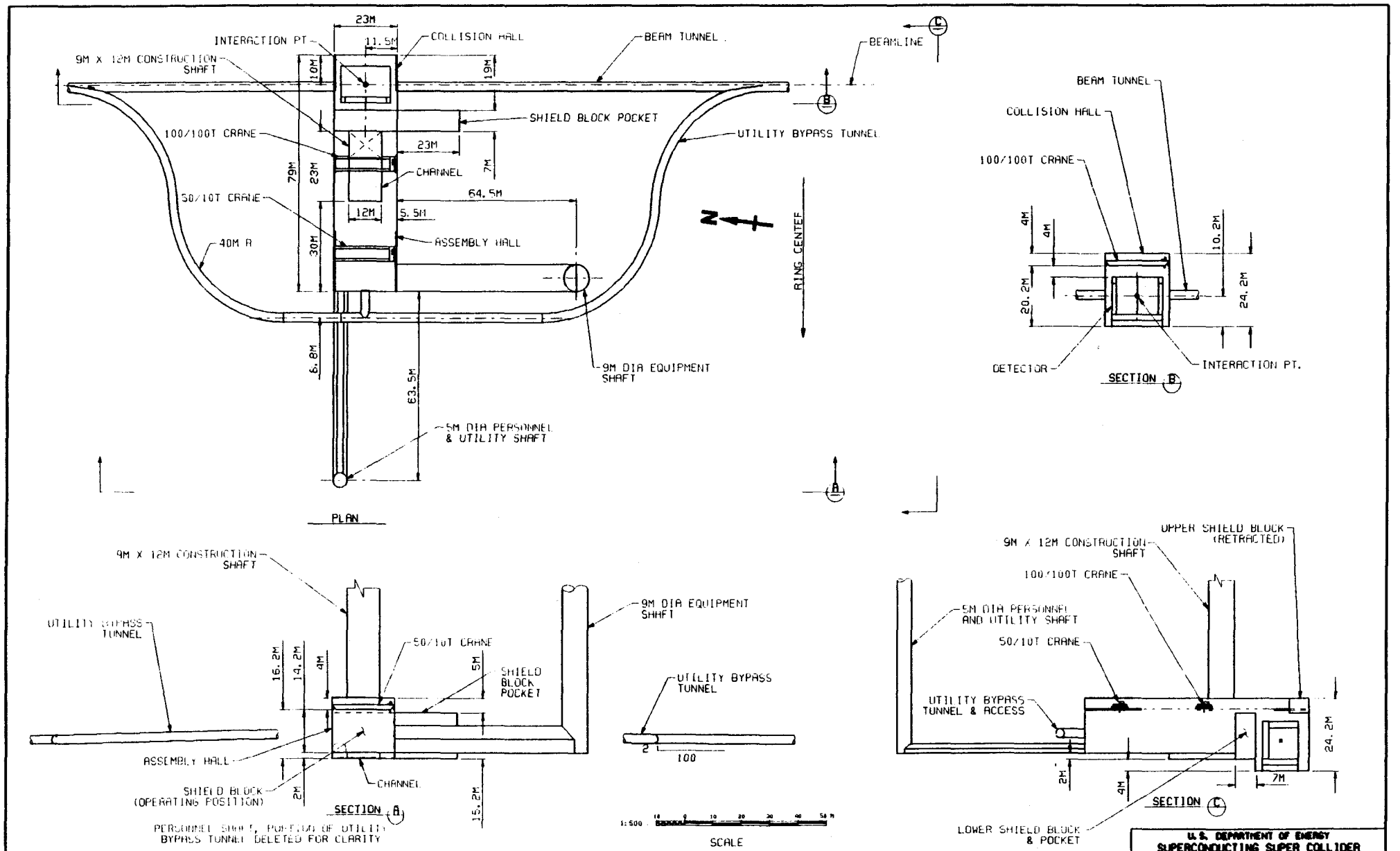


| NO | DATE | REVISION | BY | APP | APP | APP | REFERABLE DRAWINGS | NUMBER | NOTES |
|---|---|---|---|---|---|---|---|---|---|
| | 9/16/88 | TEXT REVISED | | | | | | | |
| | 9/24/88 | EQUIPMENT SHAFT RESIZED | | | | | | | |
| | | SHIELDING ADDED | | | | | | | |
| | | UNDERGROUND RAMP ELIMINATED | | | | | | | |
| A | 7/28/88 | ISSUED FOR REVIEW | | | | | | | |

DESCRIPTION (COST ACCOUNT)
WORK CHANGE BY THIS REVISION DUPLICATED TO COST REVISION MADE

CONSTRUCTION APPROVAL | APPROVAL | DATE

| | | | |
|---|---|---|---|
| SCALE | 1:500 | | DATE |
| DRAWN | M. MARCUCCI, TERRI | | |
| CHECKED | R. NUNEZ | | |
| ENGINEERED | | | |
| APPROVED | | | |
| APPROVED | | | |

PROFESSIONAL SEAL

U.S. DEPARTMENT OF ENERGY
**SUPERCONDUCTING SUPER COLLIDER**

SITE SPECIFIC CONCEPTUAL STUDY
EXPERIMENTAL HALLS AND DETECTORS CASE 5

K6 - DO DETECTOR UPGRADE
FINISHED HALL
PLAN AND SECTIONS

RBK Associates Inc. Sector Engineers and Managers Cultural & Sports Facilities

URA/CDG

CONTRACT DE-AC08-85ER40230 | PROJECT 85122

DRAWING K6-02 | DATE | REV C | DATE 5/10/89 | SHEET

Z61:[102,31]K6K02.DGN NUNEZ 10-JUN-1989 12:07

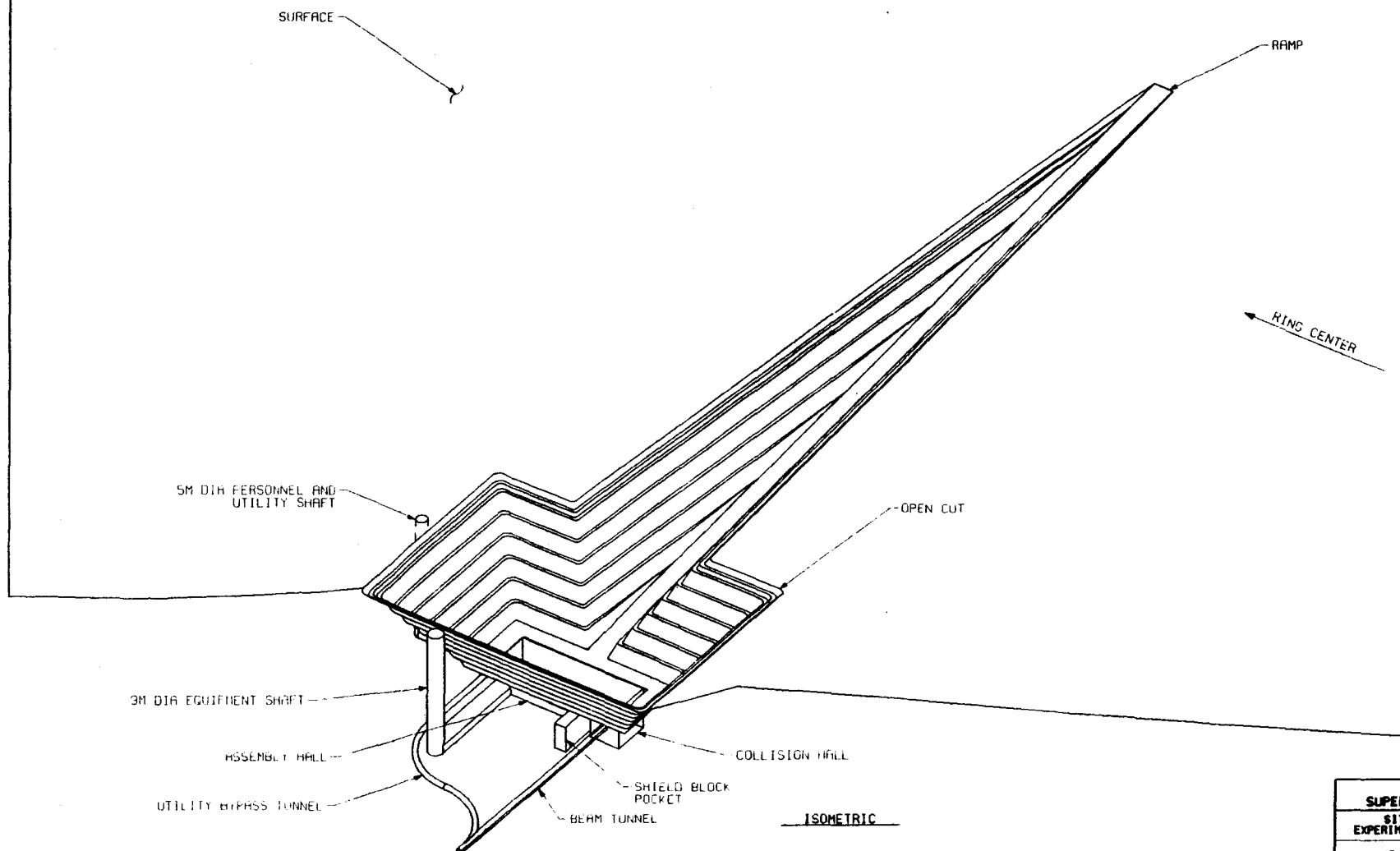


ISOMETRIC

| NO | DATE | REVISION | BY / CHK | APP | APP | S. BRO. UNION | REFERENCE DRAWINGS | NUMBER | NOTES |
|---|---|---|---|---|---|---|---|---|---|
| 4 | 5/18/89 | TEXT REVISED | | | | | | | |
| 3 | 3/14/89 | SHIELDING MODED, SHAFTS RESIZED | | | | | | | |
| | | UNDERGROUND RAMP ELIMINATED | | | | | | | |
| 1 | 3/3/89 | ISSUED FOR REVIEW | | | | | | | |

DESCRIPTION — COST ACCOUNT
COSTS COVERED BY THIS ACCOUNT CHARGED TO COST ACCOUNT ABOVE

CONSTRUCTION APPROVAL

APPROVAL — DATE

SCALE: NO SCALE — DATE
DESIGNED: G. LAUGHTON
DRAWN: A. NUNEZ
CHECKED:
APPROVED:

PROFESSIONAL SEAL

U.S. DEPARTMENT OF ENERGY
SUPERCONDUCTING SUPER COLLIDER

SITE SPECIFIC CONCEPTUAL STUDY
EXPERIMENTAL HALLS AND DETECTORS CASE 5

K6 - D0 DETECTOR UPGRADE
CUT AND COVER CONSTRUCTION
ISOMETRIC

RTK — Texas Department of Transportation, Texas Engineering Consultants, Walter P. Moore & Associates

URA/CDG

CONTRACT DE-AC08-85ER40230 — PROJECT 85122

DRAWING K6-03 — DATE ____ — REV C DATE 5/18/89 — SHEET ____

Z:\: (TOD, 3T85306201.DGN — NUNEZ 12-JUN-1989 12:10

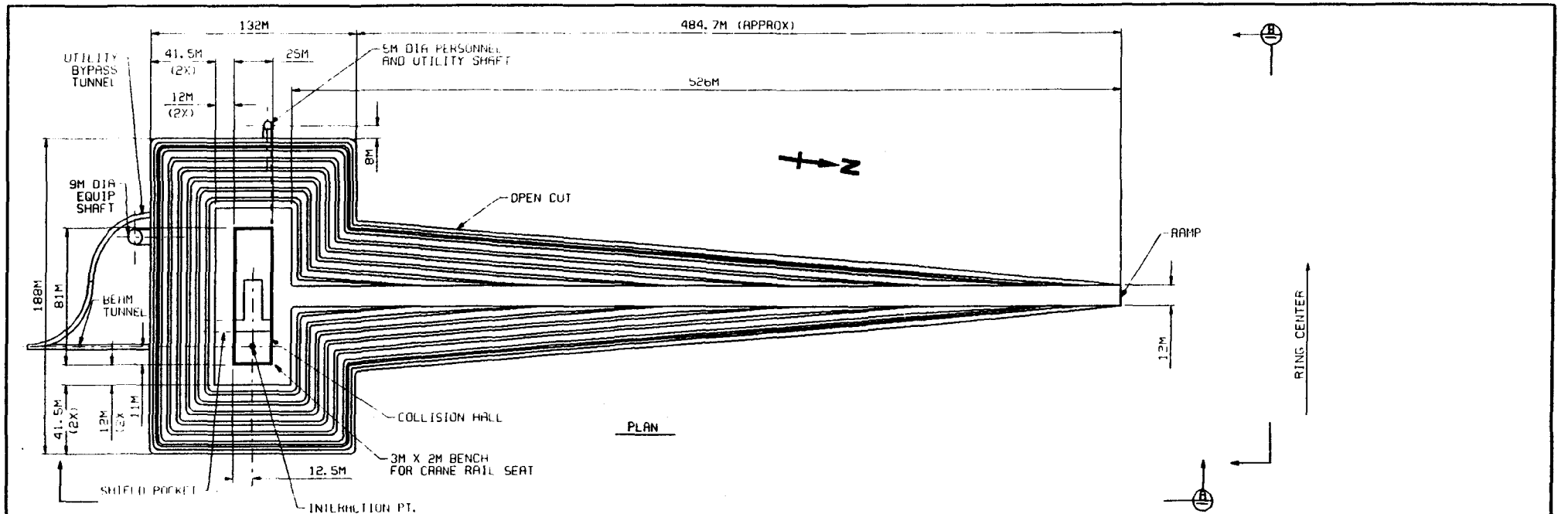


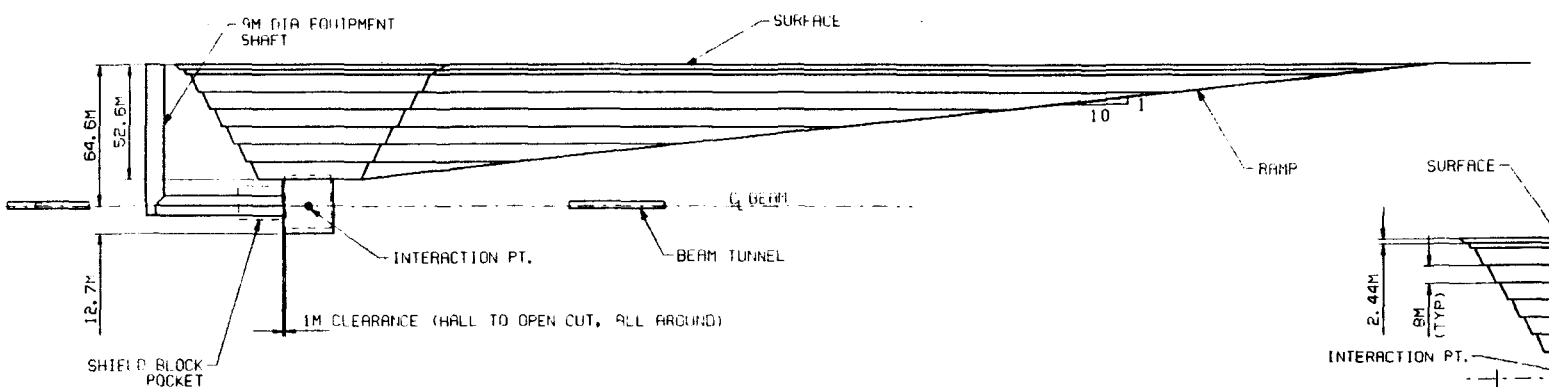


SECTION (A)

PERSONNEL SHAFT, UTILITY BYPASS TUNNEL DELETED FOR CLARITY

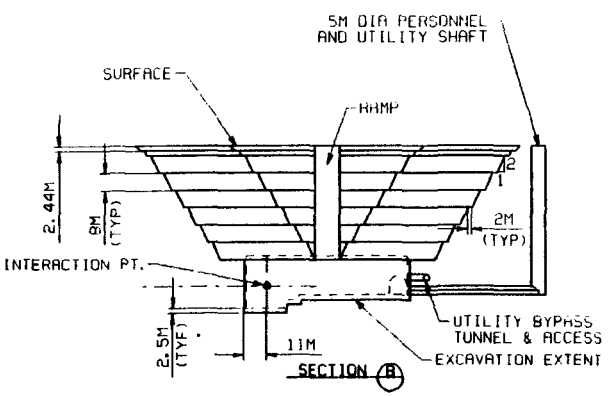


SECTION (A)

EQUIPMENT SHAFT, PART OF UTILITY BYPASS TUNNEL DELETED FOR CLARITY

1:1000 16 0 10 20 30 40 50 60 70 80 90 100 M

SCALE

| NO. | DATE | REVISION | BY | CHK | APP | APP DATE | REFERENCE DRAWINGS | NUMBER | NOTES |
|---|---|---|---|---|---|---|---|---|---|
| | 11/88 | TEXT REVISED | | | | | | | |
| | 6/88 | SHIELDING MODEL SHAFTS RESIZED | | | | | | | |
| | | UNDERGROUND RAMP ALIGNMENTED | | | | | | | |
| A | 9/86 | ISSUED FOR REPORT | | | | | | | |

DESCRIPTION — COST RECORDING: WORK COVERED BY THIS RECORD CHARGED TO COST ACCOUNT CODE

CONSTRUCTION APPROVAL

APPROVAL — DATE

SCALE: 1:1000
DESIGNED: C. LAUGHTON
DRAWN: R. NUNEZ
CHECKED
SUPERVISED
APPROVED

DATE

PROFESSIONAL SEAL

**U.S. DEPARTMENT OF ENERGY**
**SUPERCONDUCTING SUPER COLLIDER**

**SITE SPECIFIC CONCEPTUAL STUDY**
**EXPERIMENTAL HALLS AND DETECTORS CASE 5**

K6 - D0 DETECTOR UPGRADE
CUT AND COVER CONSTRUCTION
PLAN AND SECTIONS

RTK — Rogers Engineering Inc. Rogers Engineering Company, Parker & Rogers-Kaiser

URA/CDG

CONTRACT DE-AC02-85ER40230

PROJECT 85122

DRAWING K6-04 | DATE | REV. C DATE 5/10/89 | SHEET

261: (182,332)80,0200.DGN NUNEZ 12-JUN-1989 12:11

## TABLE OF WEIGHTS AND AREAS

| COMPONENT | WEIGHT/MT | NO. | TOTAL/MT |
|---|---|---|---|
| CENTRAL CALORIMETER | 350 | 1 | 350 |
| ENDCAP CALORIMETER | 450 | 2 | 900 |
| CENTRAL CATCHER CALORIMETER | 650 | 2 | 1300 |
| ENDCAP CATCHER CALORIMETER | 550 | 2 | 1100 |
| CENTRAL TOROID | 1925 | 1 | 1925 |
| CENTRAL TOROID DOOR | 1440 | 2 | 2880 |
| CENTRAL TOROID - ROOF | 3055 | 1 | 3055 |
| END TOROID | 3500 | 2 | 7000 |
| | | | 18510 |

| COMPONENT | NO. | TOTAL AREA/SQ M |
|---|---|---|
| MUON CHAMBERS | 22 | 2809 |

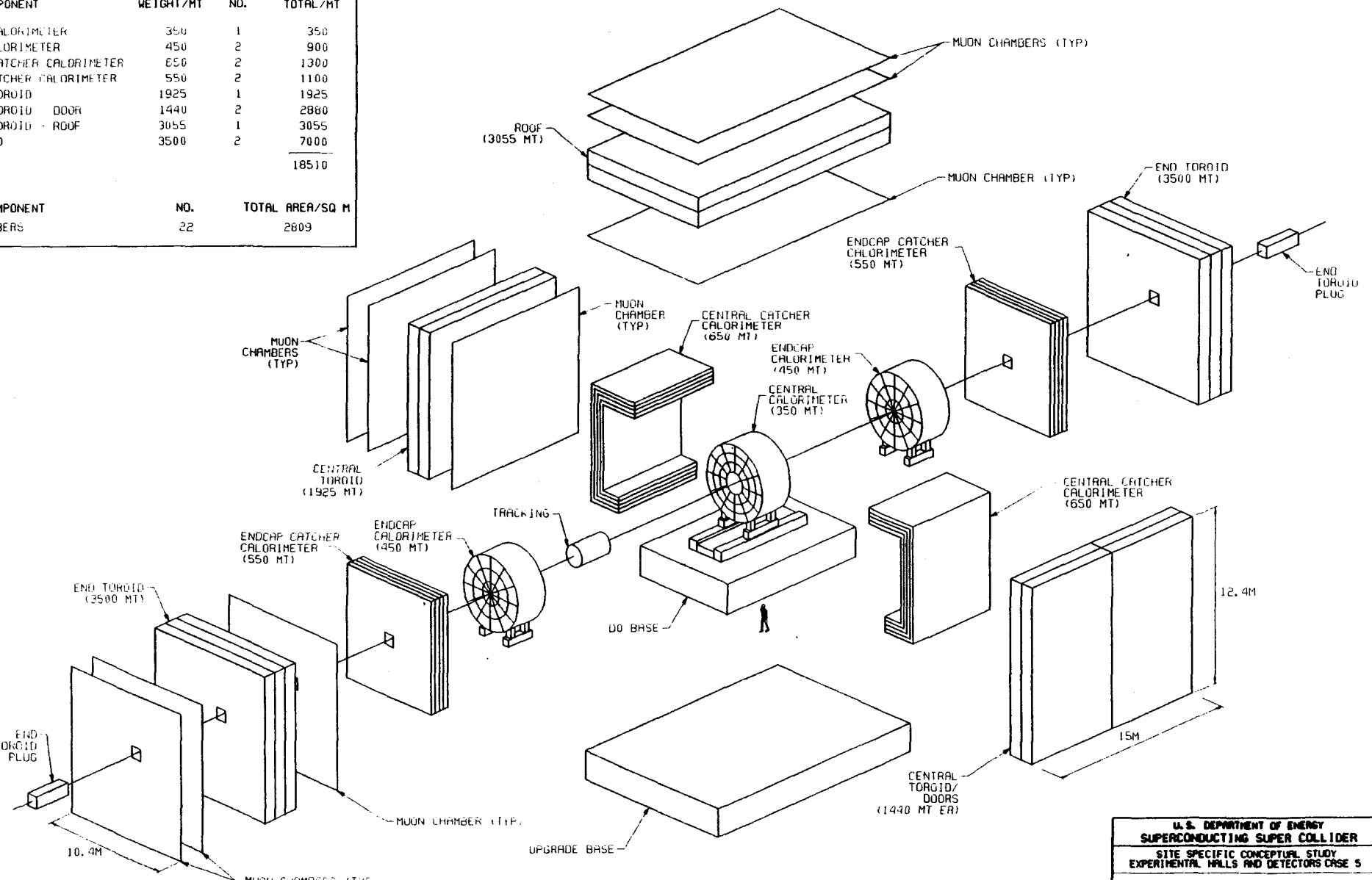


U.S. DEPARTMENT OF ENERGY
SUPERCONDUCTING SUPER COLLIDER

SITE SPECIFIC CONCEPTUAL STUDY
EXPERIMENTAL HALLS AND DETECTORS CASE 5

K6 - D0 DETECTOR UPGRADE
EXPLODED ISOMETRIC VIEW

URA/CDG

CONTRACT DE-AC02-85ER40230 | PROJECT 85122

DRAWING K6-05 | DATE | REV F | DATE 5/18/89 | SHEET

SCALE NONE | DRAWN R. MARX 3/1/88 | CHECKED S. HAMILTON 3/13/89

| REV | DATE | REVISION |
|---|---|---|
| | 5/18/89 | TEXT CHANGED |
| | 4/26/89 | MUON CHAMBER HATCH MARKED |
| | 3/8/89 | ISSUED FOR REVIEW |

REFERENCE DRAWINGS | NUMBER | NOTES

DESCRIPTION — COST ACCOUNT
WORK COVERED BY THIS REPORT
CHANGED TO COST ACCOUNT MADE

CONSTRUCTION APPROVAL | APPROVAL | DATE | PROFESSIONAL SEAL

Z61: (162, 3126500E05, OGN) HUNEZ 12-JUN-1989 12:14

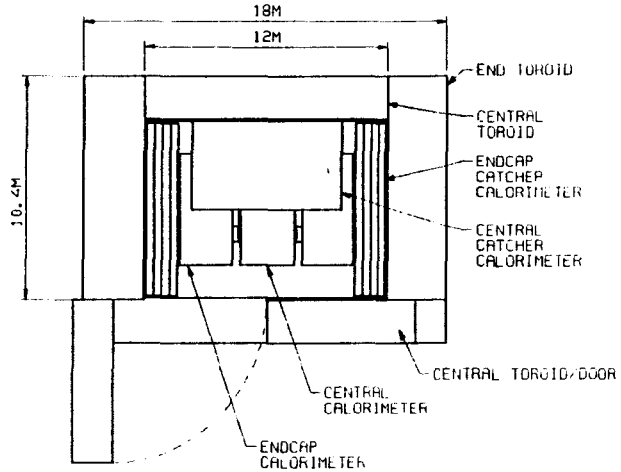


**PLAN**

(ROOF AND ONE CENTRAL CATCHER CALORIMETER REMOVED FOR CLARITY)

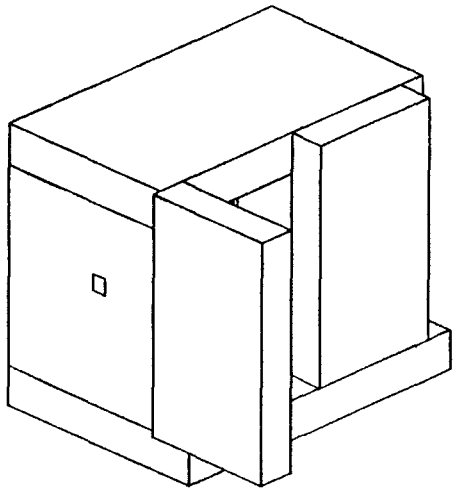

**ISOMETRIC VIEW**

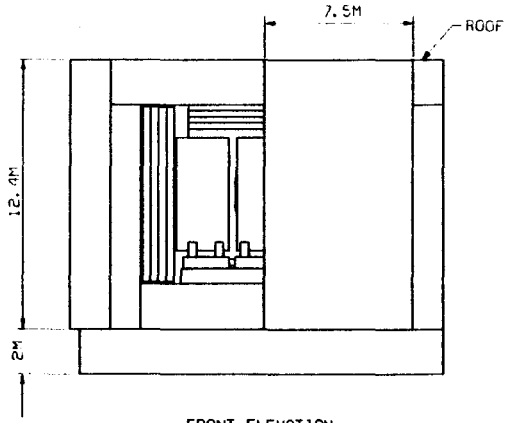


**FRONT ELEVATION**

(ONE CENTRAL CATCHER CALORIMETER REMOVED FOR CLARITY)

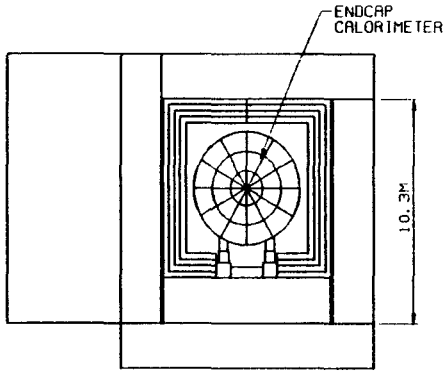


**RIGHT ELEVATION**

(END TOROID AND ENDCAP CATCHER CALORIMETER REMOVED FOR CLARITY)

| NO | DATE | REVISION | BY | CHK | APP | APP | SIGNATURE |
|---|---|---|---|---|---|---|---|
| A | 3/30/89 | ISSUED FOR REVIEW | | | | | |

REFERENCE DRAWINGS | NUMBER | NOTES

DESCRIPTION | COST ACCOUNT
JOBS CONTRIBUTING BY THIS ACCOUNT CHECKED TO COST ACCOUNT ABOVE

CONSTRUCTION APPROVAL | APPROVAL | DATE

| SCALE | | DATE |
|---|---|---|
| DESIGNED | R. HAAV | 3/1/89 |
| DRAWN | HAMILTON | 3/13/89 |
| CHECKED | | |
| APPROVED | | |
| APPROVED | | |

PROFESSIONAL SEAL

U.S. DEPARTMENT OF ENERGY
SUPERCONDUCTING SUPER COLLIDER

SITE SPECIFIC CONCEPTUAL STUDY
EXPERIMENTAL HALLS AND DETECTORS CASE 5

K6 - D0 DETECTOR UPGRADE
PLAN AND ELEVATIONS

RTK

URA/CDG

CONTRACT DE-AC02-85ER40230 | PROJECT 85122

DRAWING K6-06 | DATE | REV A | DATE 3/30/89 | SHEET

Z&U (182, 0126500206.DGN) NUNEZ 12-JAN-1990 12:16

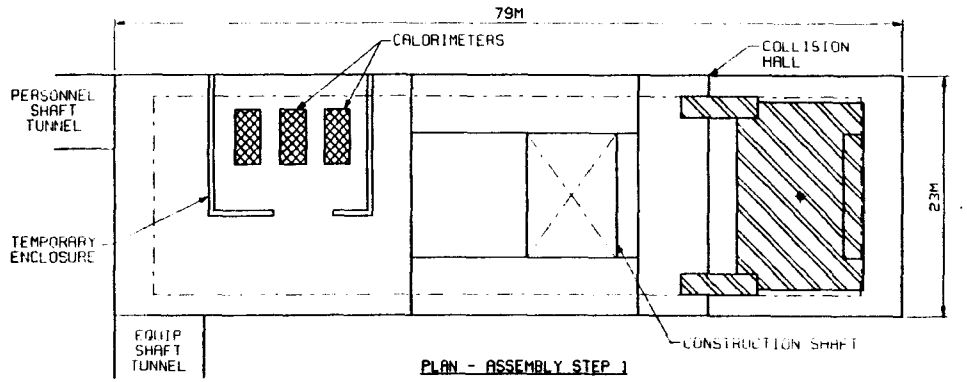


**PLAN - ASSEMBLY STEP 1**

ASSEMBLY AREA - INSTALL MODULES IN CALORIMETER SHELLS

COLLISION AREA - ASSEMBLE CENTRAL TOROID

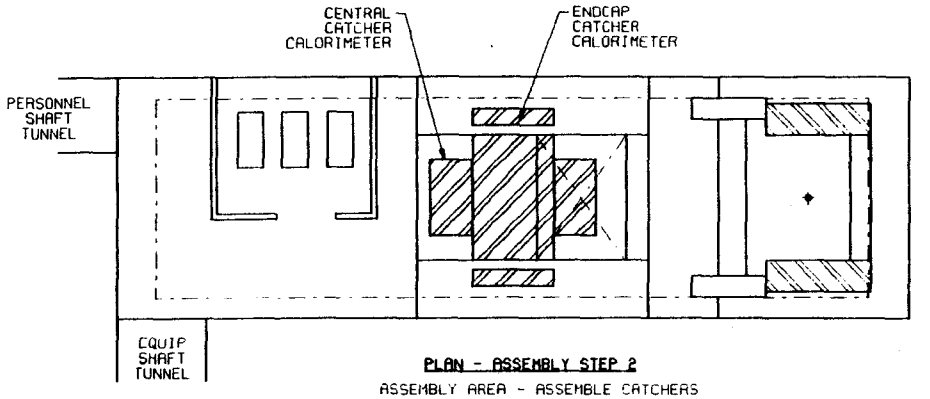


**PLAN - ASSEMBLY STEP 2**

ASSEMBLY AREA - ASSEMBLE CATCHERS

COLLISION AREA - ASSEMBLE END TOROIDS

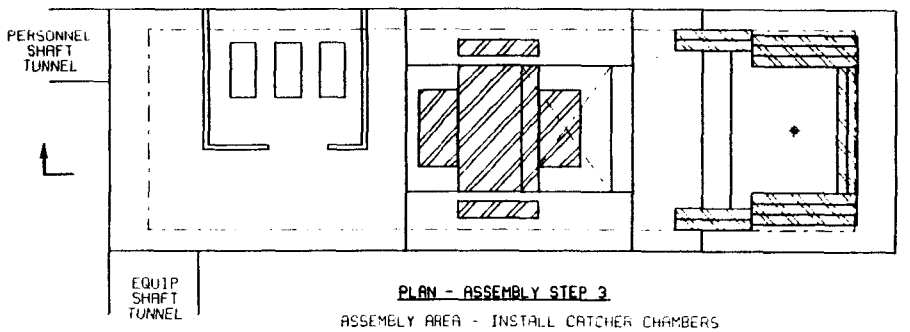


**PLAN - ASSEMBLY STEP 3**

ASSEMBLY AREA - INSTALL CATCHER CHAMBERS

COLLISION AREA - INSTALL AND ALIGN MUON CHAMBERS

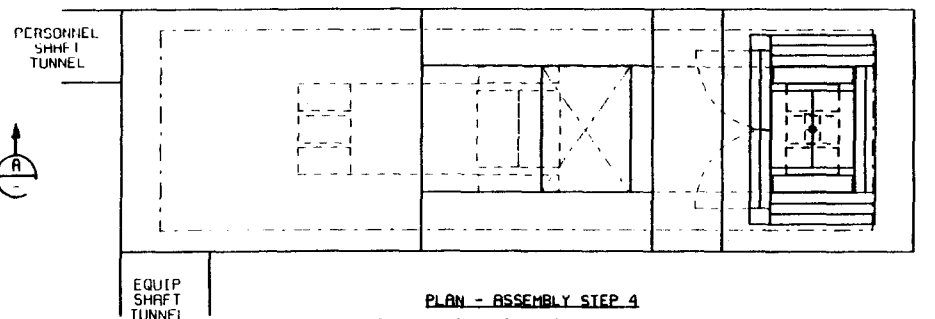


**PLAN - ASSEMBLY STEP 4**

INSTALL CALORIMETER IN CATCHER

MOVE CATCHER ASSEMBLY TO COLLISION AREA

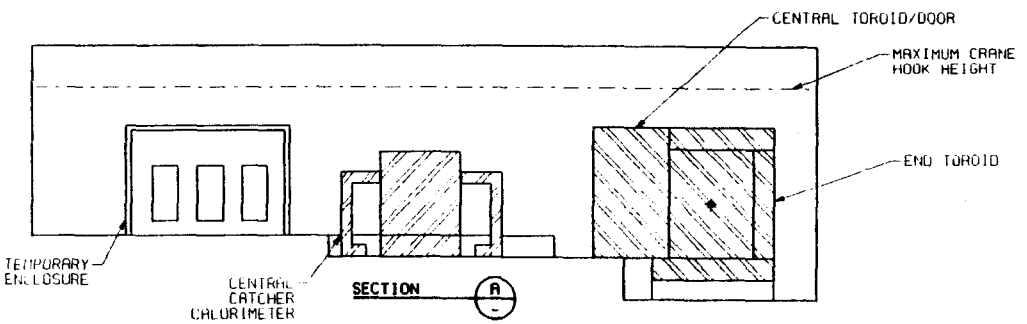


U.S. DEPARTMENT OF ENERGY
SUPERCONDUCTING SUPER COLLIDER

SITE SPECIFIC CONCEPTUAL STUDY
EXPERIMENTAL HALLS AND DETECTORS CASE 5

K6 - UPGRADED D0 DETECTOR
DETECTOR ASSEMBLY

URA/CDG

CONTRACT DE-AC06-85ER40250 | PROJECT 05102

DRAWING K6-07 | DATE | REV B | DATE 5/10/89 | SHEET

| NO | DATE | REVISION | APP |
|---|---|---|---|
| A | 6/16/88 | TEXT CHANGED | |
| B | 4/6/89 | ISSUED FOR REVIEW | |

REFERENCE DRAWINGS | NUMBER | NOTES

1. CROSS HATCHING INDICATES COMPONENT UNDER CONSTRUCTION

DESCRIPTION | DATE RECEIVED
DOES COVERED BY THIS RECORD CONSISTS OF THIS RECORD

CONSTRUCTION MATERIAL | APPROVAL | DATE | SCALE: 1:250 | DATE | PROFESSIONAL SEAL

DRAWN S. HAMILTON 3/31/89

Rust Engineers Inc.
Rust Engineering Company
Rust Inc. & Associates

ZB1:1182.3:B8SC0207.DGN