SSCL-SR-1045

SSCL-SR-1045

Superconducting Super Collider Laboratory

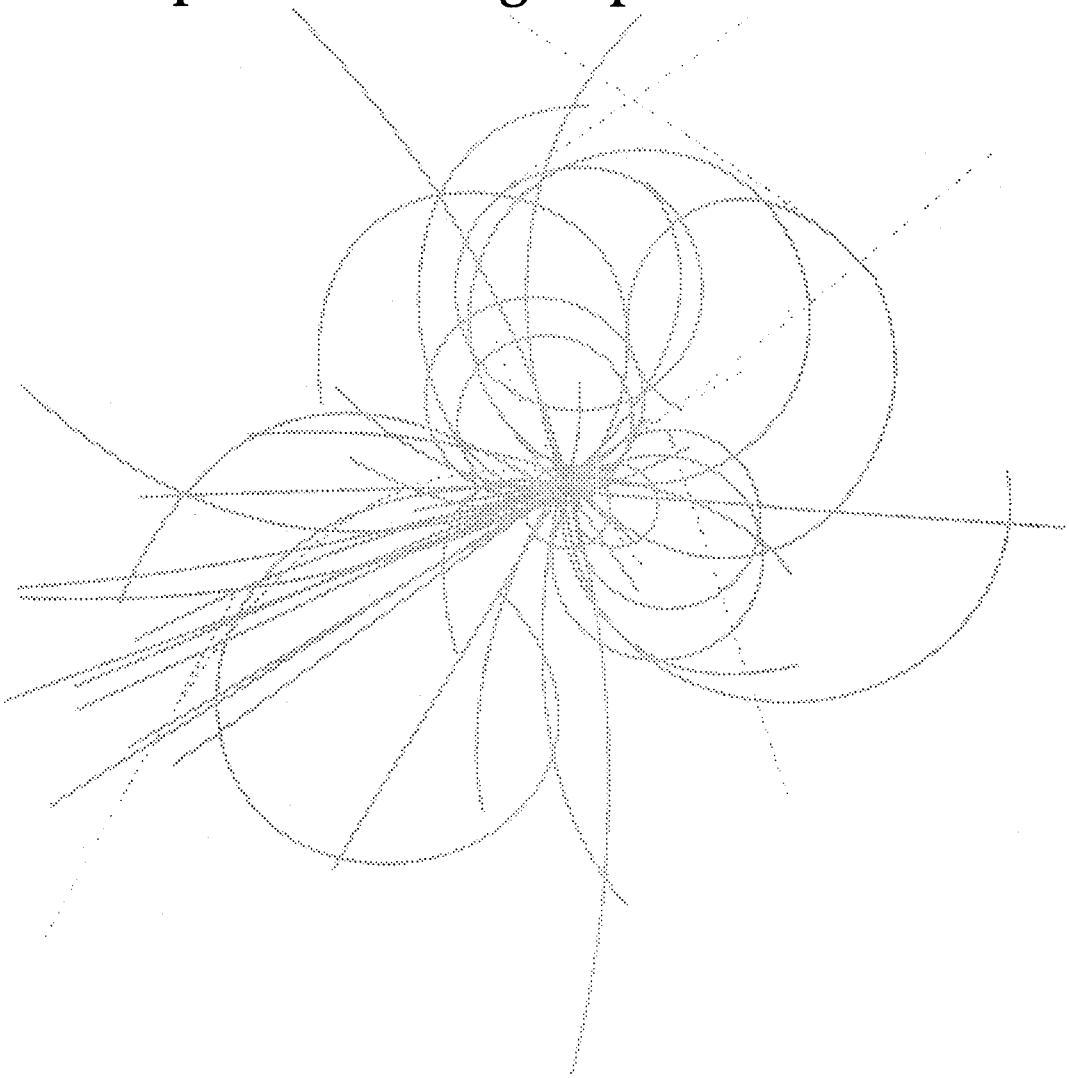

Cost Estimates of SSC Experimental Systems

December 1989

DRAFT 12/20
SSC-SR-1045
December 1989

Cost Estimates of SSC Experimental Systems

1) INTRODUCTION

Construction of sophisticated experimental apparatus will be required to realize the full potential of the Superconducting Super Collider (SSC). Just as the SSC itself will be the largest scientific instrument ever constructed, the big detectors at the SSC will themselves be more complex and larger than detectors at existing colliding beam facilities. The time-scale for the design and construction of the large SSC detectors will also be comparable to the construction of the SSC accelerator complex itself. In this report we present cost estimates for a number of possible SSC detectors and the related costs of a few complements of detectors that represent possible models for the yet-to-be determined experimental program at the SSC.

A firm conceptual design and cost estimate of the SSC accelerator complex now exists. It should be emphasized that such information for SSC detectors is only partially available and awaits decisions in response to experimental proposals some years hence. However, it is necessary for planning purposes to present a first approximation of the scope and cost of the detectors. In this report we present a range of estimates based on the best knowledge available at this time as to the nature of SSC detectors.

Cost estimates of the initial SSC experimental equipment were first made in 1986 and the results documented in the Central Design Group Report SSC-SR-1023. During the three years that have followed this report, the high energy physics community has continued to develop and refine ideas for SSC experiments at many workshops and meetings. Much of this recent activity has been summarized in the Proceedings of the 1987 Berkeley Workshop on Experiments, Detectors and Experimental Areas for the Supercollider[1] and the 1988 Snowmass Meeting on High Energy Physics in the 1990's.[2] The concepts presented in these workshops and others form the basis for our cost estimates.

The Director of the SSC Laboratory has called for "expressions of interest" in SSC experiments from the international experimental community to be submitted by May 1990. These expressions of interest are intended to provide early guidance to the Laboratory regarding the potential nature of the experimental program and the design of experimental support facilities. Although no firm date has yet been set, the first round of proposals for SSC experiments could be accepted and evaluated as early as the second half of 1991. It is particularly important to note that this present cost study cannot and does not in any way establish scientific policy with regard to the scope of the experimental program. Such a policy has yet to be determined by the Director of the Laboratory upon the advice of the appropriate advisory panels.

This report contains a number of sections. First, the physics goals and requirements of the SSC research program are outlined very briefly to illustrate the diverse character of the physics program at the SSC. Second, possible scenarios for an experimental program are given. Third, the procedures used for obtaining cost estimates of individual detectors are described. Fourth, we describe the results of estimating detector costs. This section includes a discussion of the evolution of detector costs since the 1986 study. The details of the new cost study are included in Appendix A, the Report of the Task Force on SSC Detector Costs. Finally, we present a few options for overall detector funding, including estimates of non-foreign contributions to SSC detectors.

The cost estimates are necessarily subject to large uncertainties. For example, electronics costs of existing experiments are well known but are difficult to estimate for future SSC detectors because of the significantly larger scale and systems integration requirements. Moreover, the number of electronics channels can not yet be determined with great accuracy since detailed engineering and optimization efforts have not been applied to specific detector concepts. Finally, new detector techniques are being investigated as part of an ongoing SSC detector R&D program. Some of these may find large-scale application but costs cannot be estimated reliably at this stage of development.

2) PHYSICS GOALS AND DETECTOR REQUIREMENTS

The primary goal of the SSC is the exploration of physical phenomena at energy scales above 100 GeV with particular emphasis on the investigation of electroweak symmetry breaking. The relevant experiments are extremely challenging for a number of reasons. The cross sections for signals of new physics are expected to be small and will require the SSC to be operated at high luminosity. The resulting event rates and particle fluxes require detectors that are highly segmented and that exhibit fast response times. The decay fragments of massive new particles produced by the proton-proton collisions at the SSC will be emitted over a large range of angles so that exploratory detectors must completely surround the interaction point except for small regions around the beam pipes. The energies of these decay fragments may be as high as several TeV, requiring large detector elements for their adequate measurement. The simultaneous imposition of such experimental demands has not been confronted in previous experiments and will require general-purpose detectors that are larger and more complex than existing detectors. A typical detector may be 30 m long, 20 m wide, weigh 20,000 - 50,000 tons and contain one million or more electronic channels.

The exploratory nature of the SSC physics program demands that detectors be able to respond to a broad range of possible signals for new physics in the presence of event rates that may exceed 10^8 Hz. Given the difficulty of this task, it would be unwise to limit the investigation of high-energy phenomena to just one large detector. Indeed, the operation of two or more such detectors that are simultaneously competitive and complementary is essential to the success of the SSC. Competitiveness allows the confirmation of new results in different detectors while complementarity enriches our understanding of these results. For example, two large detectors would both measure leptons and hadron jets but one might be optimized for leptons and the other for precision jet measurements.

The SSC provides not only a unique avenue for exploring the as yet unknown high-energy domain but it also offers opportunities for detailed studies of lower-energy processes. For example, the possibility of exploring CP violation in b-quark decays is extremely interesting but has not been possible at presently available accelerators because of insufficient event rates. The SSC will be a very intense source of heavy quarks and one can imagine an evolutionary experimental program of b-quark physics that leads to measurements of CP violation in a number of decay channels. The detector required for such a program is quite different from those discussed above. It will typically operate at lower luminosities and cover a smaller angular region but must possess outstanding capabilities for decay vertex reconstruction and particle identification. In terms of size, complexity and cost, such a b-quark detector is roughly equivalent to one-third to one-half of a big general-purpose detector.

A number of much smaller and more specialized experiments have also been considered for the SSC. One such experiment consists of measurements of elastic scattering with tiny detectors placed near the beams far from the interaction point. Others could include highly specialized searches for exotic particles. These experiments will require a small fraction of the overall resources but do need accommodation at suitable interaction regions. They could add diversity to the physics program both in terms of style and research goals.

Some consideration has been given to an initial exploration of SSC physics with an upgraded version of an existing detector. One advantage of such an effort would be the use of proven hardware and data-handling techniques. It is, however, unlikely that such a detector would be able to operate competitively at the highest achievable luminosities. A substantial investment in a major upgrade of an existing detector may not be appropriate if it threatens the construction of new, more suitable detectors. Nevertheless, the implementation of an upgraded detector is one option for adding breadth to the initial SSC physics program.

The SSC will present an extremely challenging physics environment in which diversity and innovation may play vital roles in the quest for discovery. Diversity is achieved by instrumenting the available interaction regions with a variety of experiments. In seeking a broad physics program it is desirable to hold costs to a reasonable level through the use of innovative detector techniques, particularly in the area of electronics. Hopefully, future innovations may lead to considerable cost savings.

3) SCENARIOS FOR THE EXPERIMENTAL PROGRAM

We proceed on the assumption that there will be at least two large, new detectors for exploration of high-energy phenomena at the highest available luminosities. Reducing the number of such detectors to one incurs the unacceptable risk that a major failure in that detector would halt the frontier research program of the SSC. It would also prevent a critical comparison of experimental results. Furthermore, it is unlikely that a single detector can be optimized to detect all possible signatures of new physics. Substituting an existing, upgraded experiment for one of the new detectors might be acceptable for the first year or two of SSC operation but, as the accelerator performance improved, would ultimately lead to the undesirable situation in which fundamental, exploratory research is carried out with just one suitable, new detector.

In addition we assume that the research program at the SSC will likely require at least one additional, more specialized detector. This third detector is not specified at this time but will reflect the diversity of research interests in the experimental community. It is unlikely that the capabilities of this third, specialized detector could be incorporated into the two other, larger detectors.

Finally, the minimally acceptable SSC research program would accommodate several small experiments. These might include measurements of elastic scattering, searches for magnetic monopoles or other highly specialized but modest-sized experiments.

This minimal program would not fully exploit the opportunities of the SSC nor would it make full use of the capabilities of the experimental high-energy physics community. In particular, it is likely to result in the rejection of one or more significant and desirable detector proposals. Assuming that appropriate resources can be made available, an adequate research program at the SSC would include a fourth large or medium-sized experiment in addition to the three described for the minimal case. Such an experiment would be distinguished from the others either by employing significantly different detector techniques in the areas of tracking, calorimetry or magnet configuration or by having optimized, special capabilities not present in the other detectors. One such capability

might be directed at making specialized measurements at luminosities substantially above the initial SSC design luminosity. It is conceivable, for example, that the SSC might reach luminosities of 10^{34} cm^{-2} sec^{-1} level after several years of operation.

A more ambitious program might also provide for a more capable or complete instrumentation of all detectors. The assumption here is that a minimal program will result in detector designs optimized in the direction of low cost with a resulting but not necessarily desirable reduction in the dimensions and number of detector elements.

For reference we note that the model adopted in 1986 for the initial complement of detectors consisted of two, new large 4π detectors, an upgraded detector combined with a precision forward spectrometer, and apparatus to measure total and elastic cross sections.

4) DETECTOR COST ESTIMATING PROCEDURES

In 1986 a Detector Cost Model Advisory Panel was convened under the chairmanship of Professor George Trilling of the University of California at Berkeley to put forth a reasonable model of an initial detector complement at the SSC. A second panel chaired by Professor Roy Schwitters, then of Harvard University, estimated costs of the complement of detectors based primarily on detectors then under construction (CDF, D0, L3 and SLD). The results of both panels were presented in the SSC Central Design Group Report No. SSC-SR-1023, Cost Estimate of Initial SSC Experimental Equipment.

In order to obtain new estimates of detector costs, a Task Force on SSC Detector Cost Estimates, co-chaired by Dr. Dennis Theriot (Fermilab) and Dr. Thomas Kirk (Argonne National Laboratory), was convened. This Task Force was charged with updating the costs of the detectors given in the 1986 report and with defining new detector examples and related costs, reflecting progress made in detector conceptual designs since 1986. The report of the Task Force is included as Appendix A. The unit costs for various detector components are based on the actual expenditures for recent, large collider experiments such as CDF, D0, L3, SLD and ZEUS. Table 1 shows a comparison between the 1986 and 1989 unit costs.

The updated unit costs are generally consistent with those from 1986 report SSC-SR-1023, when adjusted for inflation, except for a few significant items. In the area of calorimetry more is now known about the cost of such systems based on actual experience with SLD, D0 and experiments at HERA. On-line computing requirements are now believed to be more complicated. Experience with the TRD system for D0 indicates a much higher unit cost than was assumed in 1986. The unit cost with the greatest impact on overall cost is the price per electronics channel. The average cost per electronic channel

that was estimated at $120 in 1986 has been increased to $250 based on recent detector experience. These cost estimates are not necessarily inconsistent since a great degree of multiplexing was assumed in the 1986 estimate. The more recent panel felt that the cost savings of such multiplexing might be offset by greater demands for processing signals directly at the detector. Given that firm estimates for SSC detector electronics costs depend on new R&D efforts, it was thought to be more appropriate to use existing cost information. Since the large SSC detectors may contain up to one million detector segments, uncertainties in electronics costs translate into large uncertainties in overall detector costs.

The revaluation of detector unit costs was followed by their application to the conceptual detector designs considered in 1986. A comparison of detector costs from the 1986 study and the recent study is given in Table 2. Relative to the 1986 estimates, detector costs were found to be typically 50% higher. A large fraction of this increase arises from the assumption of higher unit costs for electronics discussed above.

Based upon the revised costs of the detector concepts from the 1986 study, a new cost range of the model for the initial experimental complement proposed in 1986 may be obtained. A comparison between the 1986 and 1989 estimates is given in Table 3.

Table 1. A comparison of 1986 and new unit cost estimates.

SUBSYSTEM	UNIT	CODE	1986 Cost/Unit ($000's)	Escalated* Cost/Unit ($000's)	New Cost/Unit ($000's)
Em & Precision Hadron Cal U-LAr	Tonnes	C1	16.0	17.8	26.0
Catcher Hadron Cal Fe-Gas	Tonnes	C2	3.5	3.9	4.5
U Absorber U-gas	Tonnes	C3	80.0	88.8	46.0
W Absorber W-gas	Tonnes	C4	500.0	555.0	555.0
Em Calorimeter Pb-gas	Tonnes	C5	5.0	5.6	10.0
Em Calorimeter Pb-LAr	Tonnes	C6	9.0	10.0	16.5
Solenoid Coil (large)	System	D1	10500.0	11655.0	11655.0
He Cryo	System	D2	2000.0	2220.0	2600.0
LAr Cryo	System	D3	3000.0	3330.0	2000.0
Return Yoke	Tonnes	D4	0.9	1.0	1.5
Aluminum Coils	Tonnes	D5	17.0	18.9	18.9
Toroid Coils	Tonnes	D6	0.3	0.3	0.3
Large Dipole	System	D7	1.0†	1.1†	9000.0
Solenoid Coil (Moderate)	System	D8	6000.0	6660.0	6660.0
Electronics (with trigger)	KCHAN	E1	120.0	133.2	250.0
EDIA	GBL	EDIA1	2000.0	2220.0	2220.0
Muon Magnet Absorber	Tonnes	M1	0.9	1.0	1.0
Muon tracking	Sq. Meter	M2	1.0	1.1	2.0
Muon tracking	Kwires	M3	100.0	111.0	100.0
Muon Toroids, Incl. coil	Tonnes	M4	1.2	1.3	1.1
Online Computing	System	O1	5000.0	5550.0	10000.0
Si Vertex	System	S1	1000.0	1110.0	10000.0
Trigger Scintillator	Sq. Meter	S2	0.5	0.6	0.8
TRD Pads	Sq. Meter	S3	1.0	1.1	21.0
Rich	Kpads	S4	100.0	111.0	111.0
Tracking wire Cham. Vert Det.	Kwires	T1	100.0	111.0	100.0
Special Precision Tracking	Kwires	T2	100.0	111.0	310.0
Muon Precision Tracking	Kwires	T3	400.0	444.0	420.0

* Cost/Unit escalated by 11% from Base Year 1986 to Base Year 1989
† This was a numerical error in the original Table.

Table 2. Comparison of detector costs between 1986 and 1989 for the detectors models considered in 1986.

DETECTOR	COST ($M) 1986$	COST ($M) 1989$
MODEL A	316	497
MODEL B	297	470
PRECISION MUON SPECTROMETER	160	178
IRON MUON SPECTROMETER	170	264
FORWARD DETECTOR	53	104
INTERMEDIATE DETECTOR	44	74
CDF UPGRADE	119	198
DO UPGRADE	93	142
UA-1 UPGRADE	117	191

Table 3. Evolution of detector costs.

1986 Detector Panel Model	1986($M)	1989 Inflation Only ($M)	1989 Revised Unit Cost ($M)
1) Large 4 π, magnetic	297-316	330-351	470-497
2) Muon spectrometer	160-170	178-189	178-264
3) Upgrade of existing detector	92-119	102-132	142-198
+ 1 forward detector	44-53	49-59	74-104
4) σ_{tot} and small	20	22	20
Total	613-678	681-753	884-1,083

For the 1989 study, a number of more recent detector concepts were also considered. These include several versions of a large solenoidal detector with different coil geometries and detector technologies (SCS,WCL,LCL), a large detector that emphasizes precision muon measurements (PMD), a non-magnetic detector (NMD) and a specialized detector (IPT) aimed at b-quark and other intermediate energy physics. As is explained in detail in Appendix A, a methodology similar to the other study was used to estimate costs. Detectors were parametrized and a new unit cost matrix developed and applied. A summary is given in Table 4, showing the results for the parameters given in Appendix A and also for the case of a reduction in electronics channel count or equivalently cost per channel by a factor of two. Inasmuch as these detector concepts have not been subjected to a cost-benefit analysis, there is no reason to believe that reducing the channel count (or equivalently the cost per channel) by a factor of two will destroy the capability of such detectors to explore the new physics at the SSC. Furthermore, it is anticipated that R&D will reduce electronics costs below that assumed.

The estimated cost of the large detectors was found to be in the range from 300 to 460 M$ per detector depending on the specific configuration and electronics channel count

(or cost assumption). This cost includes EDIA but not contingency, R&D, or escalation. A fully instrumented detector for b-quark physics was estimated to cost 220-290 M$. Upgrading one of the existing collider experiments is expected to cost in the range from 100 to 200 M$, given assumptions from the 1986 study. It must be noted that none of the detector concepts in these cost studies have yet been subjected to a careful engineering design and review effort. Of at least equal importance, the physics potential of either a detector for b-quark physics or an upgraded detector has not been fully assessed. Such an analysis very well may lead to limiting the funding available for either type of detector to values significantly less than the present estimates. In particular, the desirability of an upgrade costing two to three times the cost of the original detector is questionable. The cost of small experiments was not reviewed by the recent panel and is expected to remain insignificant compared to that of the large detectors.

An additional elasticity in the cost estimates can be introduced by changing the scope of the experiments. For example, the conceptual design for the experiment for investigating b-quark decays divides the detector into forward and intermediate spectrometers. It is conceivable that one might limit the initial detector to the intermediate angular region with the understanding that the forward spectrometer would be added at a later time as part of the evolution of the SSC physics program. Such a staging of the detector implementation reduces the initial cost substantially. Similarly, the initial cost of the large detectors can be reduced by either reducing their overall size, their channel counts or by adding instrumentation in stages. The impact on physics from changes in detector size and scope would have to be studied very carefully before making cost-driven decisions.

Table 4. Cost estimates in FY89 $M for six detectors described in Appendix A. The second column shows the effect of reducing the number of electronics channels by a factor of two or equivalently the cost per channel by the same factor.

Detector	Cost ($M)	Cost ($M) Reduced Electronics
Short Coil Scintillator Solenoid Detector	461	386
Wide Coil Liquid Argon Solenoid Detector	401	304
Long Coil Liquid Argon Solenoid Detector	418	329
Intermediate PT Detector	285	216
Non-Magnetic Detector	480	362
Precision Muon Detector	472	389

5) COST ESTIMATES FOR THE INITIAL COMPLEMENT OF DETECTORS

We believe a minimal program for exploiting the unique physics opportunities of the SSC consists of two large experiments for investigating high-energy phenomena at the highest machine luminosities, one medium-sized, specialized or upgraded experiment and several small experiments exemplified by measurements of elastic scattering and searches for exotic particles.

The cost ranges for this model are given in Table 5 below. The range includes a downward reduction in electronics channels by a factor of two and a staged implementation of a medium-sized experiment. The cost of small experiments is arbitrarily taken to be $20M. The range is then determined by examining costs from both the revised detector models of 1986 and the six new model detectors.

Table 5. Cost estimates of a minimal initial complement of detectors.

		Costs (FY 89$)
Two, new 4π detectors		610 - 990
A medium-sized new or upgraded detector		140 - 285
Small experiments		20
	TOTAL	770 - 1295

An adequate physics program would expand the scope of the minimal version. The two large detectors could have an improved measuring capabilities The medium-sized, specialized detector could be more fully instrumented. A fourth, substantial detector could be implemented to provide both diversity and additional research opportunities for the high-energy physics community. It could be an existing, upgraded detector or a new detector which complements the capabilities of the two large detectors. The small detectors envisioned for this more ambitious program would be similar to those in the minimal program. The overall estimated costs are summarized in Table 6 .

Table 6. Cost estimates for a physics program with expanded scope.

		Costs (FY 89$)
Two, general purpose 4π detectors		610 - 990
A specialized 4π detector		305 - 480
A medium-sized or upgraded detector		140 - 285
Small experiments		20
	TOTAL	1075 - 1775

The minimal program defined previously is clearly capable of achieving outstanding physics results. It is "minimal" only in the sense that any significant reduction of its scope would threaten the ability to explore with confidence the high-energy frontier opened up by the SSC. The more ambitious program outlined above provides greater depth and diversity to the physics program and corresponds more closely to the intentions and thinking of the high-energy physics community. In both cases the range in cost primarily reflects the uncertainty in scope of the individual detector types, rather than uncertainties in the component costs.

6) FUNDING SCENARIOS AND CONCLUSIONS

As was the case in 1986, any effort at present to estimate the cost of experimental equipment for the SSC will have many uncertainties. Our estimate of the cost of a minimal initial complement of detectors is $770 to $1295M. Escalation would increase these figures by about 30%. This figure does not include R & D costs, if any, or contingency. Given the uncertainty in the scale of a single detector and the scope of the overall program, our estimates do not include contingency. Our estimate of an initial program to exploit more fully the physics opportunities at the SSC and the capabilities of the high energy physics community is $1075 to $1775M. Estimates for off-line computing related to detectors were made in 1986, have been updated, and are presented in Appendix B. In 1986 a cost of $71M (FY86$) was obtained. The new estimated cost is $87M in FY89$.

Within the total project cost for the SSC, an allocation of $842M in then-year dollars for initial detectors and related computing was made by the Department of Energy in 1989. Taking the lower range of our estimates, to reach an acceptable figure for our minimal program, modest additional funds will be necessary. To take full advantage of the physics potential of the SSC would require significant additions. A funding scenario is given in Table 7 for a minimal program. For a program of expanded scope an additional 400-650 would be needed. Funding from non-US sources is essential but obviously very uncertain at this time.

Table 7. Funding scenario for a minimal program.
Costs are in as-spent dollars.

	(M$)
U.S.	842
Non-U.S.	270
TOTAL	1112

In conclusion, a total investment of about $1100M (in then-year dollars) is needed to allow a minimal initial experimental program at the SSC. An additional 300-650M would be needed to take full advantage of the physics potential and unique nature of the world's largest scientific instrument, the SSC.

1 Proceedings of the Workshop on Experiments, Detectors and Experimental Areas, R. Donaldson and M. G. D. Gilchriese, eds., Berkeley,California, World Scientific, 1987.

2 Proceedings of the Summer Study on High Energy Physics in the 1990s, Snowmass, Colorado, World Scientific, 1988.

APPENDIX A

SSC MODEL DETECTOR COST ESTIMATE

A Report by
the SSC Detector Cost Estimate
Task Force

submitted to
SSC Laboratory
Dallas, Texas

November 30, 1989

PREFACE

The SSC Detector Cost Estimating Task Force was appointed on August 15,1989 by M. G. D. Gilchriese, Associate Director and Physics Research Division Head of the SSC Laboratory. The Task Force co-chairmen are Thomas B. W. Kirk, Argonne National Laboratory, and Dennis Theriot, Fermilab. The full Task Force membership is appended to this report. The charge as given to the Task Force was:

> The overall goal of the Task Force is to produce cost estimates of a number of potential large SSC detectors. As part of this effort, the Task Force should update and expand, if necessary, the unit cost estimates of typical detector components given in SSC-SR-1023 "Cost Estimate of Initial SSC Experimental Equipment" and apply them to the detectors described in SSC-SR-1023. Justification for the choice of unit detector component costs should be presented. Based on more recent studies of possible large SSC detectors, the Task Force should develop parameter tables for a least four different types of large detectors to which the unit costs may also be applied. Examples of the four types of detectors to be costed could include a solenoid detector, a non-magnetic detector, a precision muon detector, and a large dipole spectrometer. The Task Force should produce a written report containing the derivation of unit component costs, detector parameter tables, and associated costs by November 1, 1989.

The original deadline for the Report (November 1, 1989) was later extended to November 27, 1989. This Report is submitted to the SSC Laboratory in response to the above charge. The Task Force believes the Report is responsive to the charge given.

The Task Force met in full session on three occasions to organize and carry out its work: August 30, 1989 at the SSC Laboratory, Dallas, TX; September 26-27, 1989 at Fermilab; October 13-14, 1989 at the Stanford Linear Accelerator Center. A draft text was circulated to the Task Force on November 8, 1989, and a final text incorporating all agreed-upon changes by Task Force members on November 22, 1989. The final Report was submitted to the SSC Laboratory on November 30, 1989.

1) INTRODUCTION

This report establishes cost estimates for experimental detector concepts currently being considered for use in the SSC physics program. It expands and updates the estimates made in SSC-SR-1023, an earlier cost estimate report issued by the SSC Central Design Group in 1986.[a] The six new detector presented here span the spectrum of recently discussed approaches to measuring SSC accessible physics.[b]

The approach taken here is appropriate for the present stage of development in thinking about the experimental program at the SSC. At this point in time, no specific detector concept has advanced beyond the stage of preliminary conceptual design and the complement of detectors that make up the early SSC experimental program is not yet specified. It is, nevertheless, essential to provide budgetary cost estimates for detectors of the types likely to be built for the SSC program and to make these estimates as reliable as possible given the present scope and program uncertainties. We believe this report meets that objective.

The methodology employed here exploits the fact that the proposed SSC detectors will evolve from existing detector designs that have been built and are currently in use at high energy physics laboratories in the U.S. and Europe. The future SSC detectors will be bigger, more complex, and will operate in a more challenging rate and radiation environment than current detectors, but are in many respects similar or identical in function and will use existing or improved technologies borrowed from currently operating detectors.

As a result of this evolutionary design aspect, the cost basis for most SSC detector technologies can be reliably taken from recent experience with fabrication of today's detectors, employing the same or very similar technologies. Careful scaling of the current actual detector costs is the principal cost estimating technique employed in this report.

To accomplish this method of cost scaling, a set of "unit costs" for particular technologies were derived by taking into proper account actual costs for applying these technologies in recently built detectors. Details of this process are described in the section on unit costs. In cases where new technologies were proposed for SSC detectors (e.g., proportional wire "straw tubes") that did not have fully established production cost precedents, careful scaling of the anticipated cost was made using actual cost data from the nearest equivalent technology.

The detector models to which these unit costs were applied in this report, represent a sample of the types currently being discussed by experimental physicists attempting to conceptualize the best detectors for carrying out the SSC physics. Most of this discussion has taken place in SSC Summer Studies, but in recent months, several groups have been meeting regularly in an attempt to move a step beyond the format characteristic of a summer study. These groups have all evolved detector concepts that are functionally complete and also have tentative technical descriptions of detector subsystems that could be employed in a real detector on the SSC timescale of construction.

These study-group detectors are often discussed in several variant forms, the forms being functionally similar, but evolving to different configurations in response to different choices of technology. Among the study groups, there has also been a rather large variation in the accepted spectrum of design-risk associated with employment of unproven methods or materials with large potential cost and technical advantages. The design-risk judgments have introduced a technology proliferation factor that gives rise to a large variation in the technologies for conceptual detectors being considered by the study groups; the physics functions and capabilities of these detectors, however, cover a much narrower spectrum.

The Detector Cost Estimating Task Force that developed this report analyzed the detector concepts under consideration by the current study groups, reviewed the reliability of the proposed technologies and decided to create a set of generic detector models functionally similar to the main lines of thinking. The Task Force further decided to severely limit the spectrum of applied subsystem technologies. From this synthesis came a specific set of six generic detectors (described below in the section on model detectors). Each of the six is closely related to the current thinking in the HEP community, but none of them is an exact copy of any particular study group model. For this reason, the Task Group's model detectors have been given generic names, as shown in Table 1.

Table 1
Model SSC Detectors for Cost Estimating Purposes

Model Name	Type or Purpose
Long Coil Liquid (LCL)	Solenoid-based, 4π general-purpose detector for high mass and new physics searches; employs Pb/LAr calorimetry and Fe terminated SC magnet coil.
Short Coil Scintillator (SCS)	Solenoid-based, 4π general-purpose detector; employs U/Scintillator calorimetry and air-terminated SC magnet coil.
Wide Coil Liquid (WCL)	Solenoid-based, 4π general-purpose detector; employs Pb/LAr calorimetry and a SC magnet coil placed outside the calorimetry.
Precision Muon Detector (PMD)	Special purpose detector with very large Fe/Aℓmagnet allowing precision momentum measurements of muons outside a small central calorimeter.
Non-Magnetic Detector (NMD)	4π general-purpose detector with no central magnetic field, but with precision muon-measuring SC air toroids surrounding a central U/LAr calorimeter.
Intermediate P_t (IPT)	Highly instrumented detector for study of bottom quark physics; employs central SC dipole magnet, high resolution Si tracking and extensive RICH and TRD particle ID.

Each of the model detectors and its features are described in the appropriate section below. There is also included in each model detector description, a cost estimate sheet and two drawings of that detector to allow critical assessment of the detector parameters, dimensions, channel counts, etc. The detector cost estimates result from combining the unit costs, whose derivation constitutes the next section of this report, with parameters of the models just noted.

These same (newly-evaluated) unit costs have also been applied to the "old" detector models from SSC-SR-1023. This was done principally for cost tracking purposes since these detector models no longer represent favored concepts in the HEP community. A summary of the derived cost estimates for both the old and new cost models is given in Table 2:

Table 2
Cost Summary of Old and New SSC Model Detectors

Model Name	FY86 ($M)	FY89 ($M)
Old Detector Models:		
Model A Detector	316	497
Model B Detector	297	470
Precision Muon Spectrometer	160	178
Iron Muon Spectrometer	170	264
Forward Detector	53	104
Intermediate Detector	44	74
CDF Upgrade	119	198
DO Upgrade	93	142
UAl Upgrade	117	191
New Detector Models:		
LCL Detector		418
SCS Detector		461
WCL Detector		401
PMD Detector		472
NMD Detector		480
IPT Detector		285

The qualifications of the cost estimates given in Table 2 are as important as the estimated detector costs themselves. The operating environment at the SSC will make extreme performance demands on the SSC detectors. The rarity of the processes of prime interest, as well as their topological complexity, will require very fine granularity in the detector elements (high channel counts) and very elaborate, multilayer trigger architectures for detection and recording of the events of interest. Finally, an increase of an order of magnitude in the energy scale will increase the detector's physical size by about a factor of two in all linear dimensions and its weight by nearly an order of magnitude.

These factors, added together, inevitably drive estimated SSC detector costs higher than those for current detectors and impose more severe constraints on technical performance. In the specific areas of frequency response (electronics speed) and radiation hardness, some needed performance levels are under development and accurate production costs and technology optima are correspondingly unclear. This technology competition is also the source of the technology debates among proponents noted earlier.

In this report, we have adopted the approach of accepting a spectrum of fairly conservative technologies in the model detectors. We have generally favored proven performance and demonstrated cost over proposed new technologies with superior anticipated technical performance, or lower system costs, or both. The rationale is that the newer technologies will be adopted only if they reach their technical promise on an appropriate time scale and if they can be implemented on a comparable or lower system cost basis.

Certainly no one will protest cost reductions for SSC detector elements, but counting on these and setting the cost estimate on the basis of unproven speculation appeared to be an unwise policy for the Task Force. We therefore adopted the method described above and pursued here.

---

[a]"Cost Estimate of Initial SSC Experimental Equipment," SSC-SR-1023, SSC Central Design Group, Berkeley, CA (June 1986).

[b]"Experiments, Detectors, and Experimental Areas for the Supercollider," R. Donaldson and M. G. D. Gilchriese, editors, World Scientific Publishing Co., Teaneck, NJ (1988).

2) UNIT COSTS

The Task Force was asked to develop a unit cost table based on the experience of the present generation of large 4π collider detectors shown in Table 3.

Table 3
Present Generation Collider Detectors

Detector Name	Description
CDF	Superconducting solenoid based, 4π general-purpose detector for $\bar{p}p$ collisions at Fermilab with Pb/Fe-scintillator and Pb/Fe-gas calorimetry. 3.5 μsec data acquisition cycle. Operational 1985, complete 1987.
SLD	Conventional solenoid based, 4π general-purpose detector for e^+e^- collisions at SLAC with Pb/LAr calorimetry. 120 pulses/sec data acquisition cycle. Scheduled to be operational 1990.
DO	Non-magnetic, 4π general purpose detector for $\bar{p}p$ collisions at Fermilab with U/LAr calorimetry. 3.5 μsec data acquisition cycle. Scheduled to be operational 1991.
ZEUS	Superconducting solenoid based, 4π general-purpose detector for e-p collisions at HERA with U/scintillator and Fe/gas calorimetry. 96 nsec data acquisition cycle. Scheduled to be operational 1991.
L3	Large conventional solenoid with precision muon tracking and U/gas calorimetry at LEP. Operational 1989.

These detectors (CDF, SLD, DO, ZEUS, and L3) are now either complete or are nearing completion. The unit cost table thus derived was then to be applied to the detectors discussed in SSC-SR-1023 and to more recent generic models of possible SSC detectors. No attempt was made to cost out new technologies currently being proposed for some of the newer detector models. The rationale for this is that the newer technologies will be adapted only if they reach their technical promise on an appropriate time scale and if they

can be implemented at comparable or lower system cost than the more mature technologies. The 1989 unit price matrix is given in Table 4.

Silicon Vertex Detectors - CDF and SLD both have vertex detectors. Both are currently in the construction stage. CDF has a 4-layer device 60 cm in length, with highly multiplexed readout electronics. The estimated cost of the CDF silicon vertex detector is $2.2M. SLD has a similar device based on CCD's. The estimated cost of the SLD vertex detector is $1.2M. The silicon vertex detectors proposed for the SSC are more complex than the present generation, both in the number of layers and the number of electronic channels. A cost of $10.0M was set for an SSC silicon vertex detector in order to account for the increased complexity.

Trigger Scintillators - The unit cost was set at $800/meter^2 primarily based ZEUS experience and includes scintillator, wave length shifter and phototube.

Transition Radiation Detectors - The unit cost was set at $21K/meter^2 based on ZEUS experience.

Ring Imaging Cherenkov Counters - The unit cost was set at $175K/meter^2 of photo-sensitive surface based on the SLD experience.

Tracking Chambers - The present generation of detectors (CDF, DO, SLD, and ZEUS) all use open geometry multiwire proportional cylindrical drift chambers. The unit cost per sense-wire of these chambers varies from a low of $204/sense-wire for the DO central drift chamber which operates in a magnetic field-free volume to a high of $394/sense-wire for the CDF central drift chamber which operates in a magnetic field of 1.5T and forms part of a precision magnetic spectrometer. The SLD costs of $289/sense-wire and the ZEUS costs of $356/sense-wire lie in between. Both the SLD and ZEUS central drift chambers operate in magnetic fields. The unit cost chosen was $310/sense-wire, an average of the three magnetic detectors CDF, SLD, and ZEUS.

Table 4

1989 Unit Price Matrix

SUBSYSTEM	COMPONENT	COST PARAMETER	UNIT	CODE	COST/UNIT ($000'S)
1. SILICON VERTEX DETECTOR		SYSTEM	SYSTEM	SVD1	10000.0
2. SCINTILLATOR	TRIGGER SCINTILLATOR	AREA	METER**2	TS1	0.8
	TIME OF FLIGHT SCINTILLATOR	AREA	METER**2	TS2	8.0
3. TRANSITION RADIATION DETECTORS		AREA	METER**2	TRD1	21.0
4. RING IMAGING CHERENKOV COUNTERS		PHOTO. SURFACE	METER**2	RICH1	175.0
5. TRACKING CHAMBERS	GENERAL WIRE/STRAWS	SENSE WIRES	KSENSE WIRES	TC1	100.0
	PRECISION TRACKING	SENSE WIRES	KSENSE WIRES	TC2	310.0
	MUON PRECISION TRACKING	SENSE WIRES	KSENSE WIRES	TC3	420.0
	PRECISION MUON (L*)	SYSTEM	SYSTEM	L*1	5500.0
6. CALORIMETRY	Pb-LIQ. ARGON	TONNES	TONNES	C1	16.5
	U-LIQ. ARGON	TONNES	TONNES	C2	26.0
	LIQ. ARGON SUPPORT	SYSTEM	SYSTEM	C3	2000.0
	U-GAS	TONNES	TONNES	C4	46.0
	Fe-GAS	TONNES	TONNES	C5	4.5
	U-SCINTILLATOR	TONNES	TONNES	C6	35.2
	Pb/Fe-SCINTILLATOR	TONNES	TONNES	C7	24.9
	PRECISION MUON (L*)	SYSTEM	SYSTEM	L*2	59200.0
7. MUON SYSTEM	STEEL ABSORBER	TONNES	TONNES	MS1	1.0
	STEEL TOROIDS (INCL. COILS)	TONNES	TONNES	MS2	1.05
	MUON TRACKING	AREA	METER**2	MS3	2.0
	PRECISION MUON SPEC.- BARREL (L*)	SYSTEM	SYSTEM	L*3	50000.0
	PRECISION MUON SPEC.- FORWARD (L*)	SYSTEM	SYSTEM	L*4	85258.0
8. ANALYZING MAGNETS	LARGE SUPERCONDUCTING SOLENOID	SYSTEM	SYSTEM	AM1	23288.0
	STND. SUPERCOND. SOLENOID (SHORT)	SYSTEM	SYSTEM	AM2	14000.0
	STND. SUPERCOND. SOLENOID (LONG)	SYSTEM	SYSTEM	AM3	20000.0
	FORWARD AIR TOROID	SYSTEM	SYSTEM	AM4	25000.0
	BARREL AIR TOROID	SYSTEM	SYSTEM	AM5	75000.0
	HELIUM CRYOGENIC SUPPORT SYSTEM	SYSTEM	SYSTEM	AM6	2600.0
	RETURN YOKE	TONNES	TONNES	AM9	1.0
	LARGE SUPERCONDUCTING DIPOLE	SYSTEM	SYSTEM	AM11	9000.0
	PRECISION MUON MAGNET-BARREL (L*)	SYSTEM	SYSTEM	L*5	82900.0
	PRECISION MUON MAGNET- FORWARD (L*)	SYSTEM	SYSTEM	L*6	43500.0
	IPT SUPERCONDUCTING DIPOLE	SYSTEM	SYSTEM	AM12	8620.0
9. ELECTRONICS	DETECTOR TO VAX - SIMPLE	CHANNEL COUNT	KCHAN	E1	25.0
	DETECTOR TO VAX STANDARD	CHANNEL COUNT	KCHAN	E2	250.0
	DETECTOR TO VAX - COMPLEX	CHANNEL COUNT	KCHAN	E3	2500.0
	ON-LINE COMPUTING (INCL. S/W)	SYSTEM	SYSTEM	E7	10000.0
10. EDIA				EDIA1	20%

11/29/89

All straw tube tracking chambers constructed to date have been small devices which have been used as vertex tracking chambers. None have been constructed to be used as the main central tracking chamber as proposed in many of the generic SSC model detectors. The unit cost adopted for straw tube chambers was $100/straw tube. This was estimated using the open geometry central drift chamber costs of $310/sense-wire and dividing by three because the open geometry chambers generally have several additional field shaping wires for every sense wire. So, if the open geometry central drift chamber had been priced on a per wire basis rather than a per sense-wire basis, the cost would have been $100/wire. The straw tube chambers have no field wires. The straw tubes themselves perform the field shaping and ion collection functions of the field wires.

The precision muon tracking chamber unit cost of $420/sense wire is derived from L3 experience.

The muon tracking station unit cost of $2000/meter^2 is derived from DO experience and consists of 3 planes/stations, with 10 cm lateral spacing between drift wires.

Calorimetry - The Pb-Liq Argon unit cost of $16.5K/ton is taken from SLD experience. The U-Liq Argon unit cost of $26K/ton is derived from the Pb-Liq Argon cost figure by substituting U costs for Pb costs and is consistent with DO experience. The Liquid Argon Support was set at $2M/system. The SLD liquid argon support system cost $1.6M and the DO system cost $1.3M. The proposed SSC detectors would all need larger storage dewars because of the larger liquid volumes involved.

The Fe-Gas calorimeter unit cost of $4.5K/metric tonne was taken from CDF and ZEUS experience.

The U-Scintillator calorimeter unit cost of $35.2K/metric tonne was taken from ZEUS experience, combined with additional information provided by industrial uranium processors. Pb-Scintillator calorimeter unit cost of $24.9K/metric tonne was derived from the ZEUS number by substituting Pb for U and is consistent with CDF experience with the central EM calorimeter.

Muon System - The unit cost for the muon system steel absorber was set at $1000/metric tonne and of magnetized toroids at $1050/metric tonne based on SLD, DO, and CDF experience.

Analyzing Magnets - These are large one-of-a-kind items and the Committee generally had to rely on the estimates of the various proponents for the unit costs. The three solenoid numbers for the large superconducting solenoid ($50M), the short standard superconducting solenoid ($14M), and the long standard superconducting solenoid ($20M) were furnished by Shigeki Mori (University of Tsukuba) from a study done for him by the Hitachi Corporation. The two air toroid numbers ($25M-forward and $75M-barrel) were furnished by Mike Marx (SUNY) from a study done for him by Martin Marietta Corporation at Oak Ridge. The cost estimates for the precision muon magnet were furnished to the Committee by the L3 collaboration from estimates which they did for the L^* detector.

The helium cryogenic support system unit cost of $2.6M was derived from CDF experience.

Electronics - Arriving at a method of estimating the unit cost of the electronics occupied more time than any other item. The Task Force considered many different ways of presenting the unit costs, but decided to present the unit cost with the same definition as in the previous study (SSC-SR-1023). The unit cost is presented on a per channel basis by counting the number of front end channels and including all costs from the detector up to the tape writing computer. This definition makes no distinction between tracking or calorimetry channels and includes the costs of cabling, connectors, triggering, and trigger processors. The unit costs thus defined varied from $80/channel for SLD, $150/channel for DO, $195/channel for CDF, to $395/channel for ZEUS. The unit cost for SLD is extremely low because of the low repetition rate of the machine (120 pulses/sec) and the high degree of multiplexing made possible by that low rate. The high unit cost of ZEUS is because of the extremely high repetition of HERA (96 nsec between pulses) and the need for pipelining of all front end channels. The ZEUS electronics are actually the closest analogue to the electronics needed for the SSC.

The Task Force adopted a unit cost of $250/channel for standard electronics based on the average of the CDF, DO, and ZEUS costs. The present generation of electronics is manufactured from many discrete components. Utilization of custom chip sets in the future may reduce this unit cost by approximately 40%. For the 1986 detectors, this unit cost of $250/channel was used for all electronic channels as had been done by the previous Task Force. For the 1989 detectors, in order to be more accurate, a variation in unit cost was allowed at $25/channel for simple electronics that set single active bits. ADC's, TDC's, and other more complex electronic functions were set at $250/channel. A cost of $2500/channel was used for complex electronics which multiplex many thousands of channels of hit bits and send compacted data on for further processing.

The on-line computing costs were set at $10M including software development.

EDIA - The EDIA (Engineering, Design, Inspection, and Administration) was set at 20% for all systems. The present generation of detectors are being constructed within the matrix of existing laboratory staff. The experience with SLD and CDF has shown that approximately 15% would be adequate. It is not clear that the SSC detectors will be constructed within that same matrix. A higher rate (20%) allows for higher personnel costs if private industry personnel are used in this function.

Contingency - No recommendation is made on contingency allocations for the generic model detectors. Experience has shown that an average contingency of 30-35% is appropriate for a complete, cost-optimized design. We believe it is inappropriate to suggest a definite contingency for these model detectors because they do not represent such cost-optimized designs. The uncertainties in the electronics costs, both in channel count and in unit costs, are the dominant uncertainties in these estimates.

3) MODEL DETECTOR DESCRIPTIONS

In this section, the six new detector cost estimating models are described and their detailed cost estimating elements presented. Each detector model is also accompanied by appropriate dimensional line drawings to clarify the characteristics of that detector. The physics mission of each of the new model detectors is also given.

The unit costs used in the detailed cost estimate tables for the six new detector models described here are discussed in the previous section on units costs. The summary level descriptions and the total estimated costs are given in the Introduction.

Generic Detector Subsystem Elements - In the various detector cost models chosen for this new cost estimation exercise (the models are described below), there were many functionally common subsystem elements incorporated. These common elements included: a central Si-based vertex chamber of high resolution and small size; a central tracking chamber based on proportional wire chamber "straws"; generic muon tracking drift wire chambers with normal or special-precision spatial resolution; and multilayered magnetized iron absorbers surrounding the calorimetry incorporating muon identification and muon vector momentum determination. All of the electronic signal processing functions in the model detector were also readily classifiable into three generic cost categories, each characteristic of the class of electronic functions they served in the detectors. A generic 'forward' detector was also created for the general-purpose solenoid detectors as later described.

The Task Force decided to define and incorporate into the detector cost models (where appropriate) generic versions of each of these subsystem elements with standardized channel counts, spatial granularities, specific technologies, and costs. The philosophy of this approach was covered in the Introduction. Here we describe the generic detector elements one by one so that repetition is avoided where they are incorporated in several of the detector models which follow.

The generic vertex detector is taken as constructed of short crystalline silicon strips with front-end amplifier, pipeline, and readout electronics incorporated in the device itself. Devices of this general type have been fabricated and employed in existing HEP detectors.

All detectors of the 4π type with central vertex chamber needs were assigned this generic vertex chamber. The vertex chamber is assumed to have detector strips of dimensions 25μ by several cm long and to have strongly multiplexed readout to conserve DC power, cabling complexity, and electronics costs. A system cost of $10M has been derived for this detector and its electronics.

The generic central tracker consists of 250K straw proportional tubes of 5 mm diameter and up to 4 meters long. The straws are thin-walled aluminized kapton film, spiral wound, and gas-sealed with rad-hard epoxy resins. A single anode wire passes down the center of each tube; the anodes are supported by periodic spacers that establish the anode position with respect to the straw wall.

Large numbers of parallel straws are bundled into super layers with a thickness of eight individual rows arranged in a close-packed geometry and bonded together into a rigid shell with rad-hard epoxy resin. The barrel section of the tracker contains ten such superlayers (100K straws in each of two longitudinal sections). Separate end section trackers with 25K straws in each end with transverse geometry are also included. The total number of straws in the central tracker thus defined is 250K.

The needed spatial precision is obtained by maintaining careful mechanical dimensional and placement accuracy in the fabrication of the straw tube superlayer shells and by operating each straw as a drift chamber with a "fast gas" and good resolution drift timing electronics. The net spatial resolution assumed for this system is 150 μ per wire statistical error and 30 μ setting error.

Technical questions associated with straw tube technology applied in the SSC operating environment include: power dissipation and spatial density of the front-end electronics, cable-routing of the straw signals; and ability to achieve the needed spatial precision in straw placement of the large superlayer shells. It is anticipated that the needed performance levels can be achieved after a suitable period of subsystem R&D. No large-scale straw tube tracker has yet been built, so there remain some essential mechanical fabrication cost uncertainties.

The specific muon identification, tracking, and momentum measuring systems adopted here for the generic muon detectors are based on well-established working muon detectors, incorporated in existing colliding beam detectors in high energy physics laboratories. The exact prescriptions for tracking station multiplicities, for wire densities over the detector area, and for assumed realizable spatial resolution in the high-precision type chambers used for momentum determination of muons above 300 GeV, have been the subject of considerable debate among the detector experts. The values chosen here encompass a reasonable and adequate set of performance criteria in this regard. In particular, all solid magnetized iron components used for muon momentum measurements are assumed to be magnetized to 1.8 Tesla. All air core superconducting toroids used for muon momentum measurements are assumed to have the current density to establish magnetic fields of 2.0 Tesla at the inner radius.

The muon trajectory is assumed to be measured by layers of proportional wire drift chambers having anode wires with spacings of 10 cm in the transverse direction and up to 7 meters in length. The spatial placement accuracy assumed for generic wire chambers was taken as 75 μ. For the "special precision wire chambers" a value of 30 μ was assumed. Because of the difficulty of achieving the latter spatial accuracy in large devices, the mechanical cost per wire for these systems was about four times the equivalent mechanical cost for the general wire chamber equivalent. The specific costs for both types of wire tracking chamber were derived from existing systems in operating colliding beam detectors. These detectors are presently in service in several laboratories in the U.S. and Europe.

Generic Forward Detector - Regardless of the details of the central and endcap parts of the three large, general purpose spectrometers (LCL, SCS, WCL), they each have a need for a pair of smaller, forward detector modules to catch particles (hadron jets and muons) that leave the interaction point at small angles (rapidity intervals from 3 to 5). Covering this range of rapidity with calorimetry significantly increases the hermiticity of the calorimetry and allows better resolution in the measurement of missing E_T, a needed quantity for the trigger and for analysis in many processes of interest.

In this cost exercise, the Task Force decided to include a generic forward detector at each end of the main detector for the three general-purpose spectrometers (LCL, SCS, WCL). Accordingly, the cost estimates for these detector models each include a 1.0 m outer radius by 0.2 m inner radius by 3 m deep, 48 metric tonne Fe/scintillator calorimeter module at each end. These forward calorimeter modules start at a distance of 16 m from the interaction point. These forward detectors are not displayed in the detector drawings. Modest tracking chambers are also included before and after each generic forward detector

module to allow identification of the incoming radiation (hadron/jet/neutral) and to monitor the hadron shower punch-through (if any) behind the module.

The calorimeter granularity was chosen to be projective towers with fixed spatial dimensions of 5 cm × 5 cm transverse and with three longitudinal depth segments. For the chosen geometry, this results in a total of 1200 towers and 7200 electronic channels, including both forward detectors. The tracking wire density was taken as comparable with the generic muon system and had a wire density of $3000/m^2$ in front and $1000/m^2$ behind the calorimeters. A total of 24,000 tracking wires and electronic channels were included in the two forward detectors.

Long Coil Liquid Model - The Long Coil Liquid (LCL) Model Detector is one of three versions of a 4π general purpose detector for conducting high mass searches and small production cross section measurements at the energies that SSC was built to explore. This detector, like two of the general-purpose models that follow, is based on a superconducting solenoid magnetic coil located around the central tracker.

The PbLA calorimetry surrounds this coil on the outside and extends into the ends of the coil some way to allow the coil to reach entirely to its Fe return yoke, hence the designation 'Long Coil' in its name. This geometry differs from the SCS and WCL models which follow and provides one of the three magnet coil geometries currently regarded as technically competitive at this time.

The elements of the LCL Detector are shown in Figures la and lb. From these figures it can be seen that the detector has a central tracker of diameter 4 m and of length 8 m. This tracker contains 250K proportional straw tubes of the type described in the generic subsystem section which precedes this description. There is also a generic Si vertex chamber of the type described in the generic subsystem section.

The PbLAr calorimetry surrounds the superconducting coil at each end. This geometry provides complete coverage of the large and small angle regions although there is necessarily a gap in the shower development path where the coil passes through the calorimeter. The technology of lead plates combined with direct charge collection from the dielectric liquid argon is well demonstrated in existing detectors. The segmentation chosen consists of 0.05 × 0.05 projective towers in $\Delta\eta$ and $\Delta\phi$. The longitudinal segmentation includes eight samples per tower to maintain the impedance properties of the front-end electronics (capacitance). This system generates 120K electronic channels of calorimetry data. Generic forward detectors, as described in the generic section, have been added at each end to increase the full detector calorimeter coverage to a total of 10 units of rapidity.

Outside the calorimetry, the LCL detector features a toroidally magnetized iron yoke for tracking muons. The muon tracking system measures the muon trajectory with triplet proportional chambers at three points inside the iron in the barrel region and at four points in the forward regions. The entrance point to the iron is measured with a fourth (fifth) triplet station and the final direction is measured outside the yoke with two more stations. The muon system thus constructed requires 75K electronic signal channels. A double layer of plastic scintillator counters is used outside the iron for muon triggering purposes. This system reconstructs muons over a rapidity range of ±3 units.

This variation of the general-purpose solenoid detector has lower estimated cost than the SCS Model to follow. This lower cost derives from the use of PbLAr calorimetry and iron toroids in the forward direction. Such a system provides slower time response in the calorimeter and less precision for muon momenta measured in the forward directions. These technologies also result in a significantly lower system cost for the detector.

The detailed cost estimate elements are given here as Table 5.

Table 5

LCL DETECTOR MODEL (10/89)

SYSTEM	UNIT	NO. OF UNITS	CODE	UNIT COST (000'S)	SUBTOTAL	SUBSYSTEM SUBTOTAL	TOTAL	SUBSYS/TOTAL %
SPECIAL PURPOSE DETECTOR								
SI VERTEX SYSTEM	SYSTEM	1	SVD1	10000	10000			
						10000		2.4%
CENTRAL TRACKING								
AXIAL STRAWS	KWIRES	200	TC1	100	20000			
END STRAWS OR WIRES	KWIRES	50	TC1	100	5000			
FORWARD DETECTOR WIRES	KWIRES	24	TC1	100	2400			
						27400		6.6%
CALORIMETRY								
PRECISION HADRON/EM, LA	TONNES	4400	C1	16.5	72600			
LIQUID ARGON SUPPORT SYSTEM	SYSTEM	1	C3	2000	2000			
FORWARD Fe/SCW CALORIMETER	TONNES	96	C7	24.9	2400			
						77000		18.4%
MUON DETECTORS								
TOROIDS, INCLUDING COIL	TONNES	44000	MS2	1.05	46200			
MUON TRACKING LAYERS	METER**2	12000	MS3	2	24000			
MUON SCINTILLATORS	METER**2	6000	TS1	0.8	4800			
						75000		17.9%
SOLENOIDS, MISC. DETECTOR STRUCTURE								
SUPERCONDUCTING MAGNET, 230 MJ	SYSTEM	1	AM3	20000	20000			
He CRYO SYSTEM	SYSTEM	1	AM6	2600	2600			
YOKE AND MISC. STRUCTURE	TONNES	6000	MS1	1	6000			
						28600		6.8%
ELECTRONICS								
CENTRAL TRACKING WIRE CHAMBERS	KCHAN	250	E2	250	62500			
CALORIMETER CHANNELS	KCHAN	120	E2	250	30000			
MUON TRACKING WIRE CHANNELS	KCHAN	75	E2	250	18750			
MUON SCINTILLATOR CHANNELS	KCHAN	6	E2	250	1500			
FORWARD DETECTOR WIRES	KCHAN	24	E2	250	6000			
FORWARD CALORIMETRY	KCHAN	7	E2	250	1750			
						120500		28.8%
ON-LINE COMPUTING	SYSTEM	1	E7	10000	10000			
						10000		2.4%
EDIA								
(20% OF ABOVE)						69700		16.7%
							418200	

11/21/89

Long Coil Liquid
Cost Estimating Model SSC Detector
November 1989 Version

Plan View

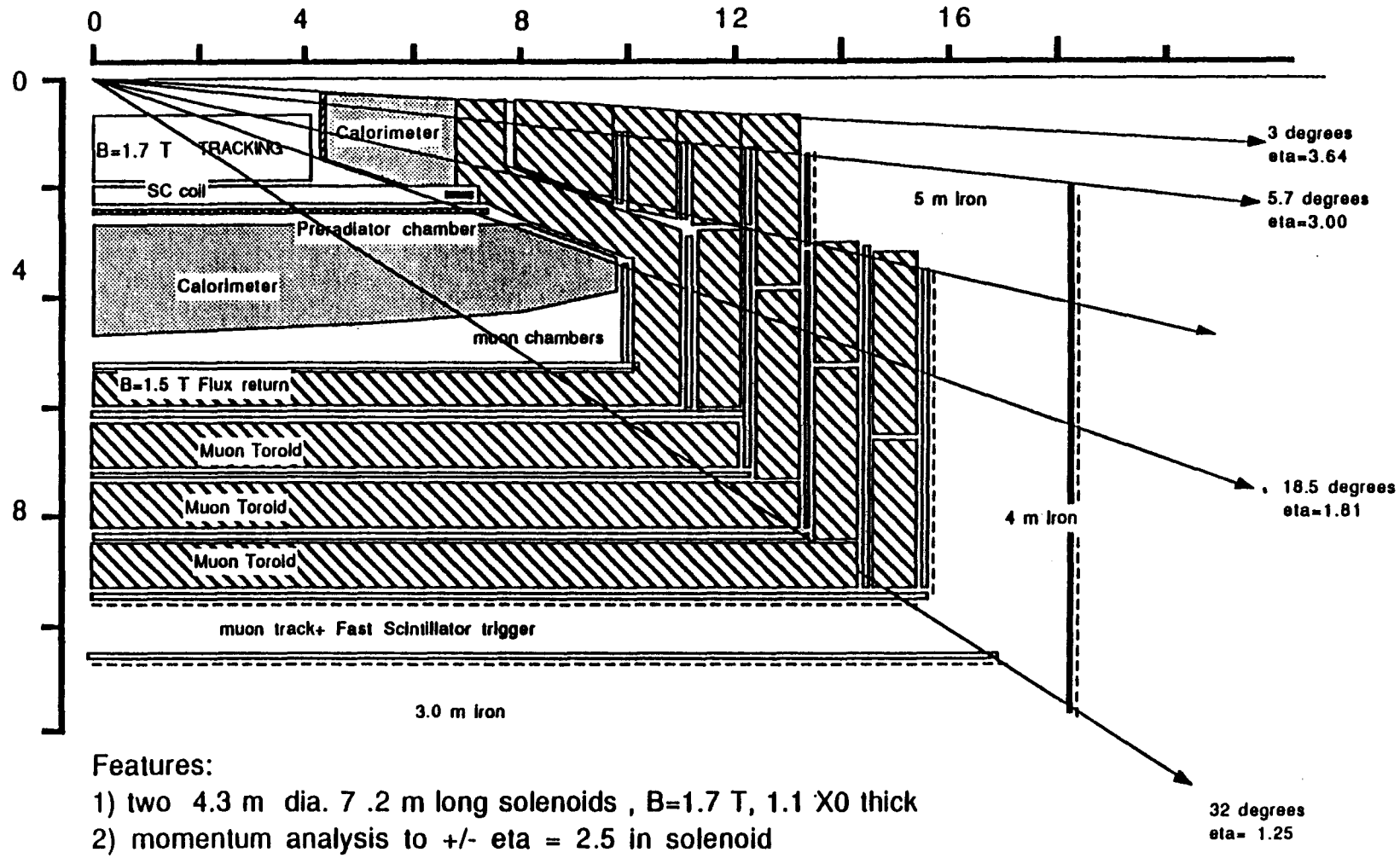

Features:

1) two 4.3 m dia. 7 .2 m long solenoids , B=1.7 T, 1.1 X0 thick
2) momentum analysis to +/- eta = 2.5 in solenoid
3) BL**2.5 factor of 2.75 that of CDF
4) Magnetized Iron yoke + muon toroids (44 k tons)
5) muons over +/- eta =3.0, e's over +/- eta=2.5

Figure 1a

Long Coil Liquid
Cost Estimating Model SSC Detector
November 1989 Version

End View

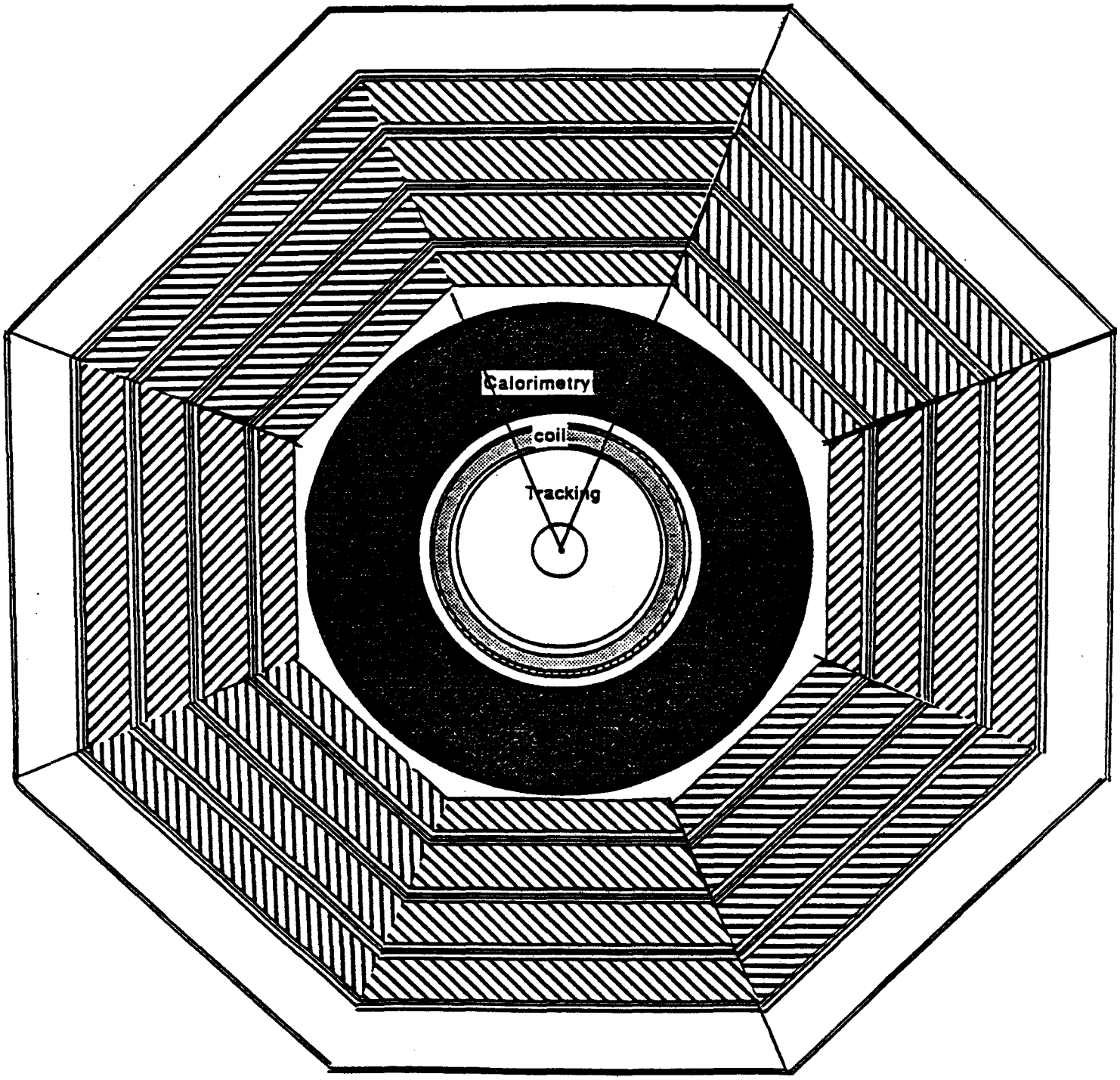

Figure 1b

Short Coil Scintillator Model - The Short Coil Scintillator (SCS) Model Detector is one of three versions of a 4π general-purpose detector for exploiting the high-mass, small cross section physics. Drawings showing the component parts of the SSC detector are given in Figs. 2a, 2b.

From the figures, it can be seen that the SCS incorporates a superconducting solenoid coil inside the calorimetry. It is further noted that the return iron yoke does not touch the solenoid winding and therefore allows the calorimetry to assume a closed and hermetic configuration. The central field is taken to be 2 Tesla, a value commensurate with the needed momentum measuring precision for this type of detector.

The SCS model incorporates a central tracker of the standard type chosen for all of the comparison models. This tracker has a central vertex chamber based on silicon-strip detectors with a surrounding charged particle tracker built up from 5 mm diameter straw tubes. The straw tubes and silicon vertex complement are discussed in the section on generic detector elements preceding the specific detector models.

The calorimetry for the SCS model is based on a parallel plate sampling type utilizing radiation-hard scintillator now being developed as the active sampling element and depleted U^{238} metal plates as the showering medium and passive absorber. Scintillation light from the transverse shower sampling plates is carried by radial wavelength shifter plates to photomultiplier tubes mounted on the outside surface of the calorimeter. First-level data storage and trigger electronics are also mounted on the outside calorimeter surface. The design is a conservative evolution of the present ZEUS Detector being constructed for use at the DESY Laboratory in Hamburg, Germany. It is larger, of course, and has greater rate capability, but basically employs known materials and technology. Generic forward detectors, as described in the generic section, have been added at each end to increase the full detector calorimeter coverage to a total of 10 units of rapidity.

The solenoid magnet flux return yoke is supplemented in the barrel region by toroidally-magnetized iron absorbers. These are used for muon identification and for fast muon triggers. In the endcap region, where the short solenoid coil is unable to provide good momentum measurements for muons, the SCS employs superconducting air toroids and precision-proportional wire drift chambers to supplement the central solenoid. Muons are therefore identified and their momenta determined over six units of rapidity.

The muon tracking in the barrel region is accomplished by the generic three-plane, six-station drift chamber system described in the generic detector element section. This system assumes that muon positions are measured at three points inside a magnetized iron tracker, once each at the entrance and exit points and once at a distance of 1 meter away from the outside to determine the final direction vector. The muon chambers are not shown explicitly in Figure 2a. This is a standard geometry for muon ID and triggering.

There are no specialized particle ID systems in the SCS. All the electronics is taken to be of the standard precision. There is assumed to be a double layer of scintillation counters covering the outside surface for use as a first-level muon trigger.

This detector has the highest cost estimate for the group of 4π general-purpose models chosen. The higher costs derive from the choice of U/Scintillator calorimetry with its superior speed of response and full EM/hadron compensation characteristics and by inclusion of superconducting endcap toroids to extend precision muon momentum measurements to the forward angle regime where the central solenoid loses precision for geometrical reasons.

The spread sheet cost estimate representation is given in Table 6. The specific detector weights, channel counts, and assumed technologies are apparent in this sheet. The unit costs chosen are those given in Table 4 in the section on unit costs.

Table 6

SCS DETECTOR MODEL (10/89)

SYSTEM	UNIT	NO. OF UNITS	CODE	UNIT COST (000'S)	SUBTOTAL	SUBSYSTEM SUBTOTAL	TOTAL	SUBSYS/TOTAL %
SPECIAL PURPOSE DETECTOR								
SI VERTEX	SYSTEM	1	SVD1	10000	10000			
						10000		2.2%
TRACKING								
CENTRAL TRACKING STRAW CHAMBER	KWIRES	250	TC1	100	25000			
FORWARD DETECTOR WIRES	KWIRES	24	TC1	100	2400			
						27400		5.9%
CALORIMETRY								
U/SCIN BARREL CALORIMETER	TONNES	2000	C6	35.2	70400			
U/SCIN END CALORIMETER (2)	TONNES	1800	C6	35.2	63360			
U/SCIN FORWARD CALORIMETER (2)	TONNES	96	C7	24.9	2400			
						136160		29.5%
MUON DETECTORS								
MUON TRACKING , BARREL	METER**2	3700	MS3	2	7400			
MUON TRACKING, ENDS (2)	METER**2	25	TC3	420	10500			
MUON SCINTILLATOR COUNTERS	METER**2	2700	TS1	0.8	2160			
MUON MAGNETIZED Fe YOKE/ABS.	TONNES	13100	MS2	1.05	13755			
						33815		7.3%
MAGNETS								
SUPERCONDUCTING 'SHORT' SOLENOID	SYSTEM	1	AM2	14000	14000			
SUPERCONDUCTING AIR TORIDS (2)	SYSTEM	2	AM4	25000	50000			
He CRYO SUPPORT SYSTEM	SYSTEM	2	AM6	2600	5200			
						69200		15.0%
ELECTRONICS								
CALORIMETRY	KCHAN	50	E2	250	12500			
MUON TRACKING	KCHAN	60	E2	250	15000			
TRACKING	KCHAN	250	E2	250	62500			
FORWARD DETECTOR WIRES	KCHAN	24	E2	250	6000			
FORWARD CALORIMETRY	KCHAN	7	E2	250	1750			
						97750		21.2%
ON-LINE COMPUTING	SYSTEM	1	E7	10000	10000			
						10000		2.2%
EDIA								
(20% OF ABOVE)						76865		16.7%
							461190	

11/21/89

Short Coil Scintillator
Cost Estimating Model SSC Detector
November 1989 Version

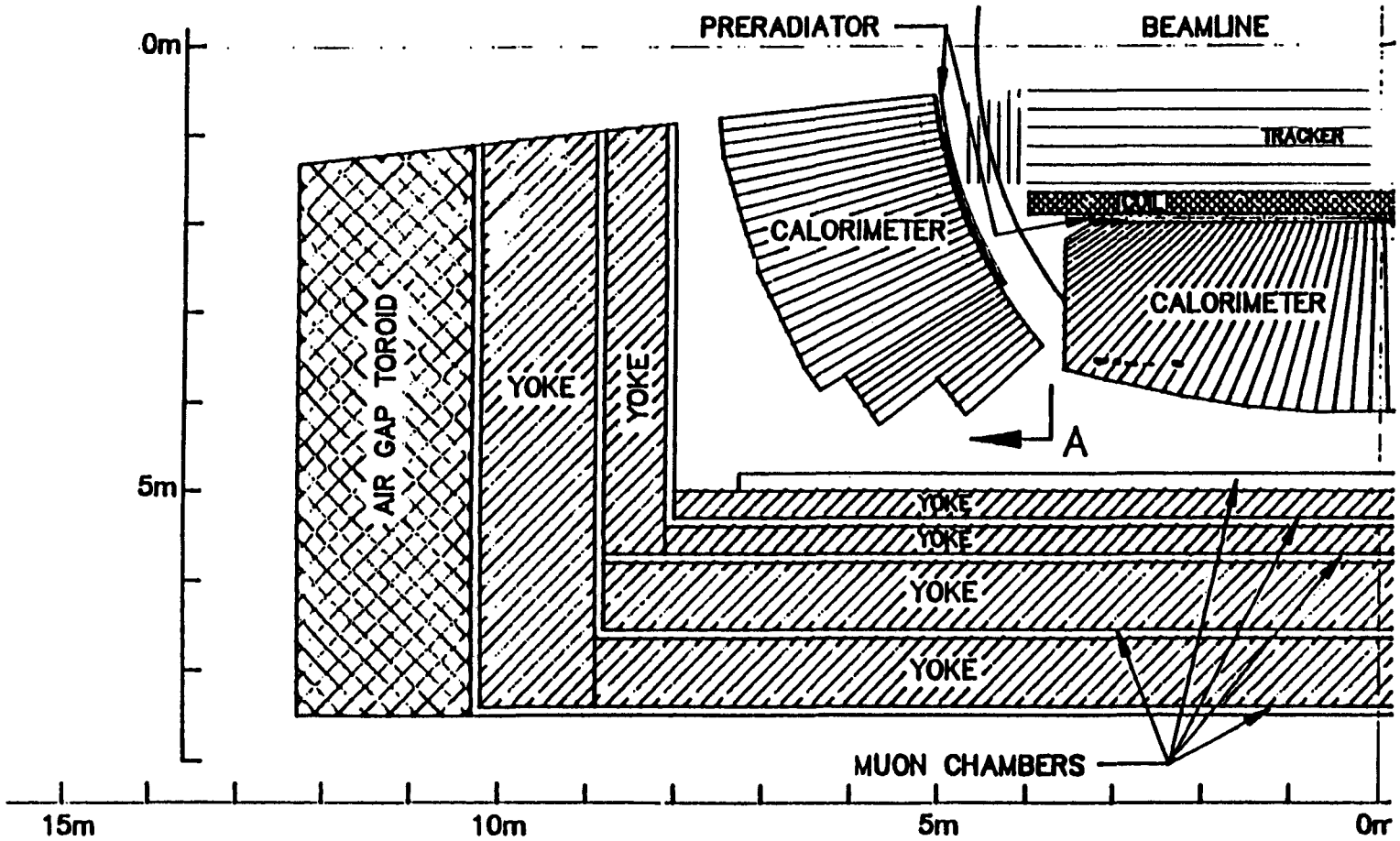

TOP VIEW—SECTION

Figure 2a

Short Coil Scintillator
Cost Estimating Model SSC Detector
November 1989 Version

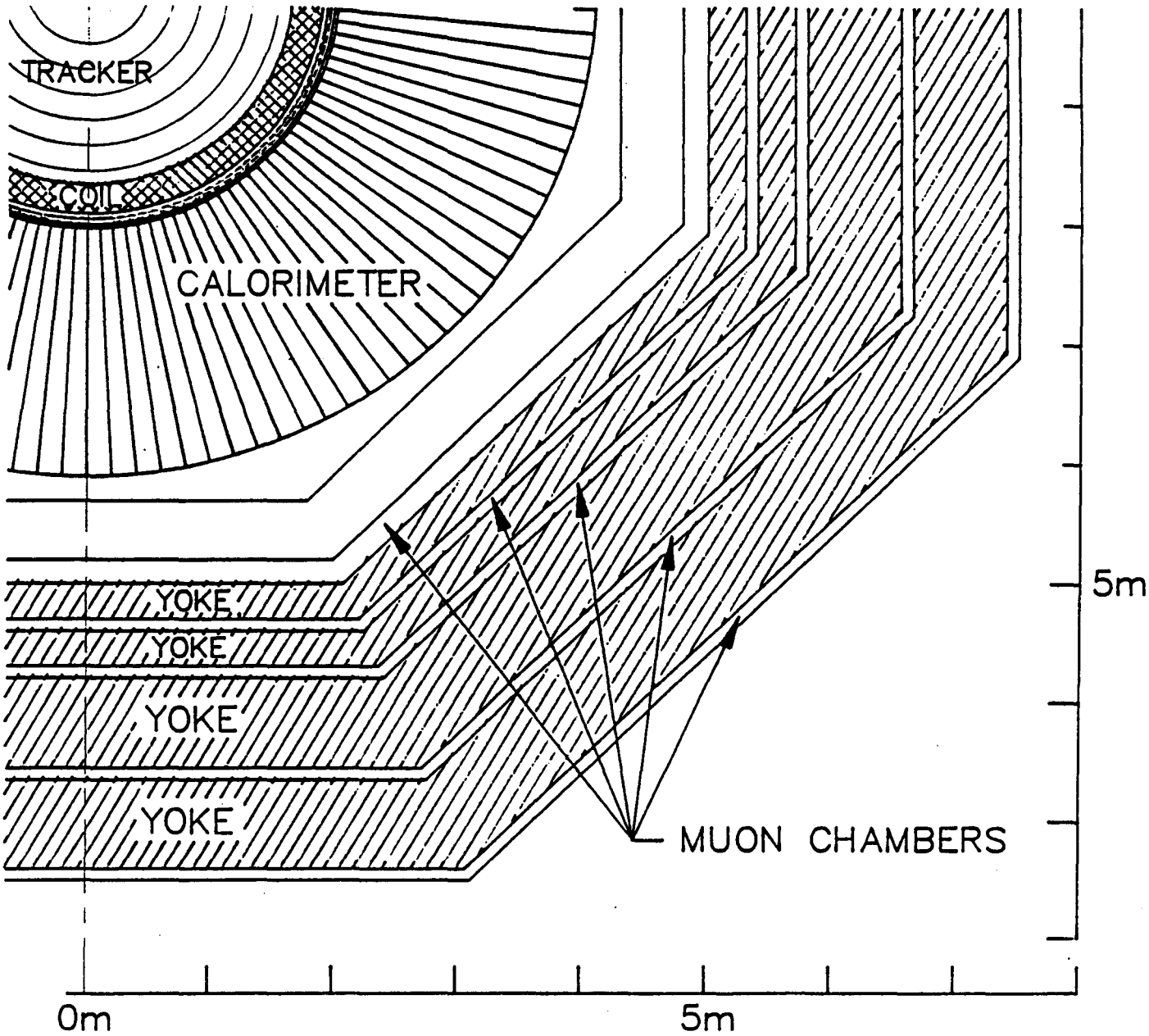

Figure 2b

Wide Coil Liquid Model - The parameters and characteristics of the Wide Coil Liquid (WCL) Model Detector have been chosen based on present estimates of the requirements for studying Higgs particles, possible new gauge bosons, heavy quarks, WW scattering at large invariant masses, supersymmetry, and parton-parton scattering at very large momentum transfer. The detector's goal is to obtain optimum detection and identification of electrons, muons, W's and Z's, jets, and neutrinos over a large rapidity region. The region of primary instrumentation extends over ±3 units of rapidity, although the calorimetry extends to ±5.5 units to obtain optimal missing energy resolution. The detector will be capable of operating at the SSC design luminosity of 10^{33} $cm^{-2}s^{-1}$.

A magnetic field is incorporated in the central tracking and calorimetry region because of the importance of identifying the electric charge signs of both electrons and muons, as well as adding the possibility of identifying tau leptons and secondary vertices. A magnetic field is also likely to prove useful for studying as-yet undiscovered physics processes. Hermeticity of the calorimetry is important to the physics capability, so the entire central and endcap calorimeters have been placed inside the solenoid. Putting the calorimetry inside the coil yields a very effective muon detector in the central region due to the increased magnetic bending achieved.

The decision to mount all the calorimetry inside the solenoid coil has profound consequences. The superconducting coil must be very large (10 m × 16 m) and able to carry a large weight inside the bore (3000 tons). Restrictions on the thickness of the coil, however, can be relaxed because the coil will no longer compromise energy measurements or affect the e/h signal compensation ratio. Muon tracking chambers can be placed just outside the coil because there is sufficient absorber to reduce hadron showers. The flux return yoke can now be utilized not only for magnetic flux return but for muon identification and enhanced muon momentum measurement as well.

Figures 3a and 3b show longitudinal and tranvserse cross sections of the detector, respectively. The major components of the WCL detector are labeled. The vertex detector and central tracking device, with an outer radius of 1.8 m, are described in the generic subsystem section. The coil extends from a radius of 4.3 m to 5.0 m and is 16 m long. The magnetic field in the bore is 1.7 T, providing for magnetic analysis of exiting muons over a field integral of approximately 7.5 T-m. The flux-return steel yoke extends radially from 5.4 m to 7.5 m.

Calorimetry is the central element of the WCL Detector Model, providing precision measurement of the energy and direction of electrons, jets, and (by inference) missing E_T.The calorimetry is liquid argon (LAr) with lead absorber. The calorimetry of the central detector extends over ±3 units of rapidity. The depth of calorimetry in the barrel region is designed to be 8 proton absorption lengths along a normal ray from the interaction point. To approximate this condition at varying polar angles, the calorimeter in this region is stepped down at ±2.3 m from the interaction point along the beam line. Calorimetry in the endcap regions is designed to be 10 proton absorption lengths deep. Forward calorimeters to cover the rapidity regions from 3.0 to 5.5 are included in the cost estimate, but are not shown in the figures. The segmentation of the calorimetry in the barrel and endcap calorimeters is 0.05 units in azimuth and rapidity. The segmentation of the generic forward calorimetry consists of 5 cm × 5 cm uniform towers. There are 8 depth segments in the liquid argon calorimetry and three in the forward Fe/scintillator calorimetry.

The goal of the muon detector system in the WCL detector is to identify and measure the vector momenta of muons between about 10 GeV/c and 2 TeV/c over a rapidity range of ±3 units. For the barrel region, the system chosen in this detector integrates the measurements of the central tracking device with the measurements of the muon chambers outside the coil for muon momentum determination. Muons directed toward the endcaps are measured primarily by means of conventional magnetized iron endcap toroids placed around the beam pipe. There are 18 planes of muon chambers in both barrel and endcap regions. There are also two layers of scintillation counters in both regions used in triggering the detector for muons.

The number of electronics channels for the calorimeters is based on the segmentation noted above. For the muon chambers, the number of electronics channels is based on the number of planes and a cell size of 6 cm. The number of channels in the vertex detector and central tracking device is detailed elsewhere.

Design of the WCL Detector is at an early stage and the dimensions of the all components are preliminary. It should be emphasized that the viability of the various mechanical supports for large components of the detector (e.g., the iron yoke) has not been established; determination of that awaits a true engineering design for these components. However, it is felt that the overall configuration is known well enough to provide a basis for a cost estimate.

The detailed cost estimate elements are given here as Table 7.

Table 7

WCL DETECTOR MODEL (10/89)

SYSTEM	UNIT	NO. OF UNITS	CODE	UNIT COST (000'S)	SUBTOTAL	SUBSYSTEM SUBTOTAL	TOTAL	SUBSYS/TOTAL %
SPEC. PURPOSE DETECTOR								
SILICON VERTEX	SYSTEM	1	SVD1	10000	10000			
						10000		2.5%
TRACKING								
TRACKING WIRES - BARREL	KWIRES	195	TC1	00	19500			
TRACKING WIRES - END CAP	KWIRES	55	TC1	00	5500			
FORWARD DETECTOR WIRES	KWIRES	24	TC1	00	2400			
						27400		6.8%
CALORIMETRY								
Pb/LAr - BARREL	TONNES	1710	C1	16.5	28215			
Pb/LAr - END CAP	TONNES	1300	C1	16.5	21450			
FORWARD Fe/SCW CALORIMETER	TONNES	96	C7	24.9	2400			
						52065		13.0%
MUON DETECTORS								
SCINTILLATOR - BARREL	METER**2	1800	TS1	10.8	1440			
SCINTILLATOR - END CAP	METER**2	720	TS1	10.8	576			
TRACKING - BARREL	METER**2	5400	MS3	2	10800			
TRACKING - END CAP	METER**2	3240	MS3	2	6480			
						19298		4.8%
SOLENOIDS, MISC DETECTOR STRUCTURE								
SUPERCONDUCTING COIL	SYSTEM	1	AM1	50000	50000			
						50000		12.5%
CRYOGENIC SYSTEMS								
He CRYOGENIC SYSTEM	SYSTEM	2	AM6	2600	5200			
Ar CRYOGENIC SYSTEM	SYSTEM	1	C3	2000	2000			
						7200		1.8%
MISC. DETECTOR STRUCTURE								
RETURN YOKE	TONNES	12200	AM9	1	12200			
MUON ABSORBER TOROIDS	TONNES	11500	MS2	1.05	12075			
						24275		6.0%
ELECTRONICS (INCLUDING TRIGGER)								
TRACKING	KCHAN	250	E2	250	62500			
CALORIMETRY	KCHAN	126	E2	250	31500			
MUON DETECTION	KCHAN	130	E2	250	32500			
FORWARD DETECTOR WIRES	KCHAN	24	E2	250	6000			
FORWARD CALORIMETRY	KCHAN	7	E2	250	1750			
						134250		33.4%
ON-LINE COMPUTING	SYSTEM	1	E7	10000	10000			
						10000		2.5%
EDIA								
(20% OF ABOVE)						66897		16.7%
							401383	

11/21/89

Wide Coil Liquid
Cost Estimating Model SSC Detector
November 1989 Version

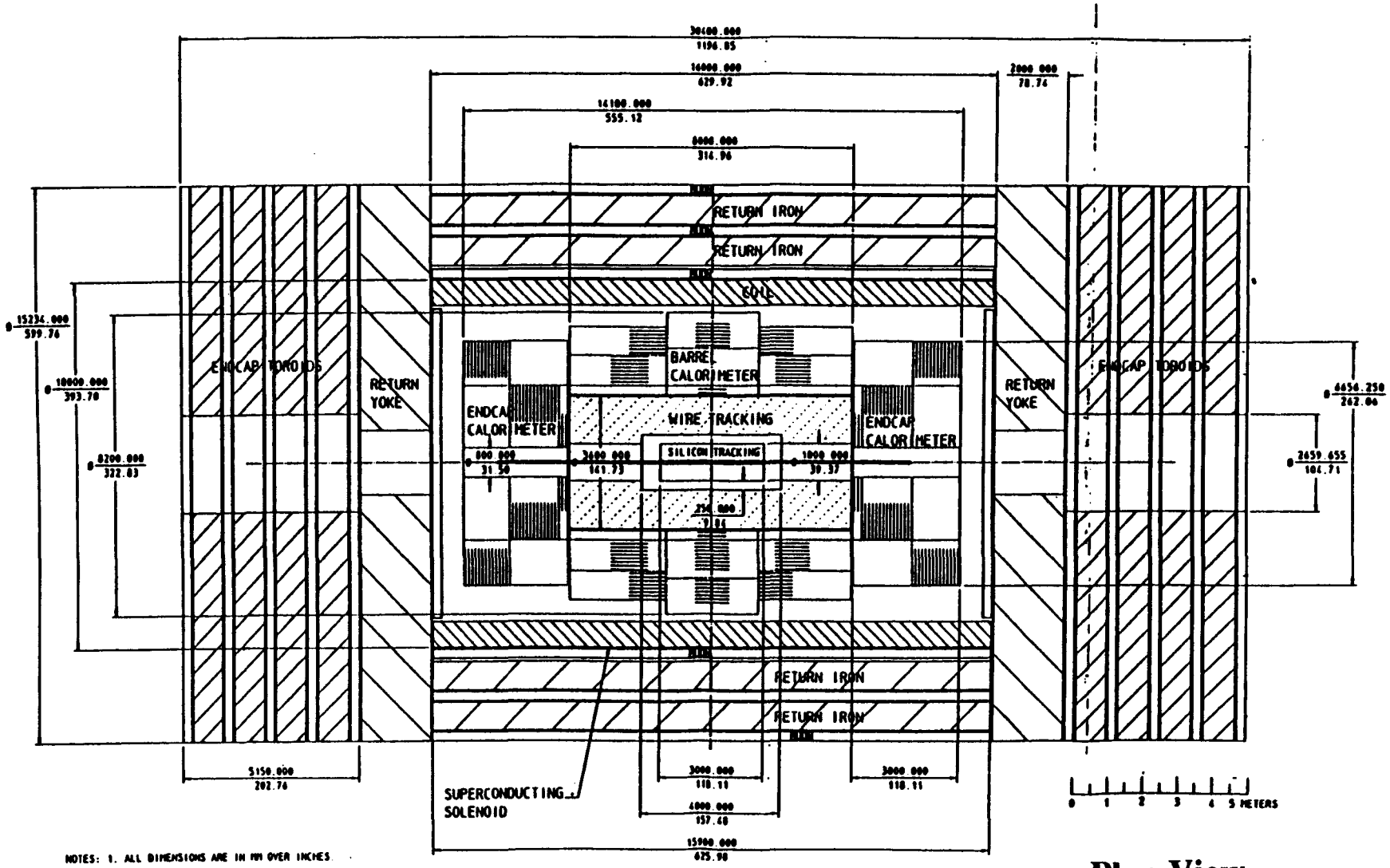

Plan View

Figure 3a

Wide Coil Liquid
Cost Estimating Model SSC Detector
November 1989 Version

End View

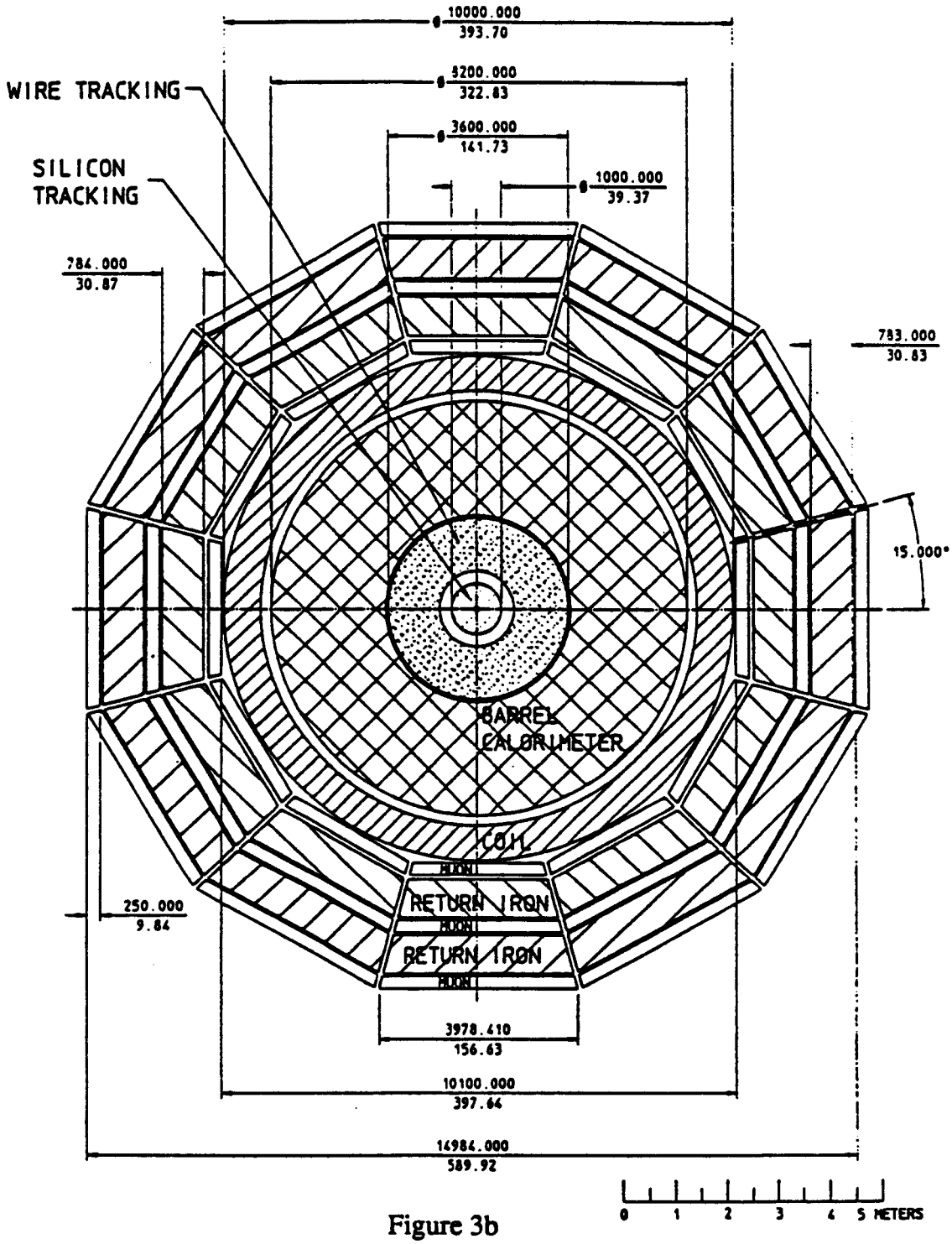

Figure 3b

Precision Muon Detector Model - The Precision Muon Detector (PMD) Model is patterned after a detector, L3, now operating in the LEP facility of the CERN Laboratory in Geneva, Switzerland. Because the L3 Detector is in use for e^+e^- physics at lower energies, the PMD version adapted for use in the SSC environment is larger and has added features. The precision measurement of muon vector momenta is the featured characteristic of the PMD and other detector capabilities have been de-emphasized to optimize this capability.

The physics mission of the PMD is to explore the heavy mass sector, including Higgs particles and other heavy mass states that have two-body lepton (electron and muon) decays. Other types of physics processes involving hadronic final states can also be studied with the PMD, utilizing the Cu/gas calorimetry system in the central portion of the detector.

The most striking feature of the PMD is a set of three very large superconducting magnets, a central solenoid plus a large toroid at each end of the PMD. These magnets thereby enclose the entire detector, including the muon system. Inside the muon magnets are sets of large, extra-high precision muon tracking detectors directly patterned after those used in L3. By maintaining an absolute spatial precision of 30 μ for the wires in these detectors, muon momenta can be measured with about 1% precision up to 1 TeV, hence the designation of this detector as the Precision Muon Detector. Among the model detectors in this Report, only the NMD (described next) rivals the PMD in muon resolution.

The calorimetry for the PMD is of the gas ionization type with copper absorber material. The calorimeter is much smaller in diameter and weight than the general purpose detector calorimeters and has 48K shower samples over 16K towers. The calorimeter coverage is three units of rapidity in each hemisphere. The needed rate capability is anticipated to be achieved with a combination of short electron drift distance and 'fast' gas in the calorimeter.

Inside the calorimeter, there is a central wire chamber tracker whose purpose is primarily to establish event topology and lepton vertex and initial slope information. The tracking length and magnetic field magnitude are not of sufficient magnitude to contribute significantly to momentum measurements of hadrons from high mass states or to contribute to electric charge determination for high energy electrons. The central tracker has 6K electronic channels, a small number consistent with its mission.

Details of the cost estimate are given in Table 8. These costs were scaled directly from the actual costs of constructing the L3 Detector at CERN.

Table 8

Precision Muon Detector

PM DETECTOR MODEL (10/89)

SYSTEM	UNIT	NO. OF UNITS	CODE	UNIT COST (000's)	SUBTOTAL	SUBSYSTEM SUBTOTAL	TOTAL	SUBSYS/TOTAL %
TRACKING								
L* TRACKING SYSTEM	SYSTEM	1	L*1	5500	5500			
						5500		1.2%
CALORIMETRY								
L* CALORIMETRY SYSTEM	SYSTEM	1	L*2	59200	59200			
						59200		12.5%
MUON DETECTOR								
L* - BARREL	SYSTEM	1	L*3	85258	85258			
L* - FORWARD	SYSTEM	1	L*4	23288	23288			
MUON TRIGGER SYSTEM	METER**2	2740	TS1	0.8	2192			
						110738		23.5%
ANALYZING MAGNETS								
BARREL REGION	SYSTEM	1	L*5	82900	82900			
FORWARD REGION	SYSTEM	1	L*6	43500	43500			
						126400		26.8%
ELECTRONICS								
TRACKING	KCHAN	6	E2	250	1500			
CALORIMETRY	KCHAN	48	E2	250	12000			
MUON DETECTION	KCHAN	235	E2	250	58750			
MUON TRIGGER	KCHAN	37	E2	250	9250			
						81500		17.3%
ON-LINE COMPUTING	SYSTEM	1	E7	10000	10000			
						10000		2.1%
EDIA								
(20% OF ABOVE)						78667.6		16.7%
							472008	
								10/16/89

Precision Muon Detector
Cost Estimating Model SSC Detector
November 1989 Version

Plan View

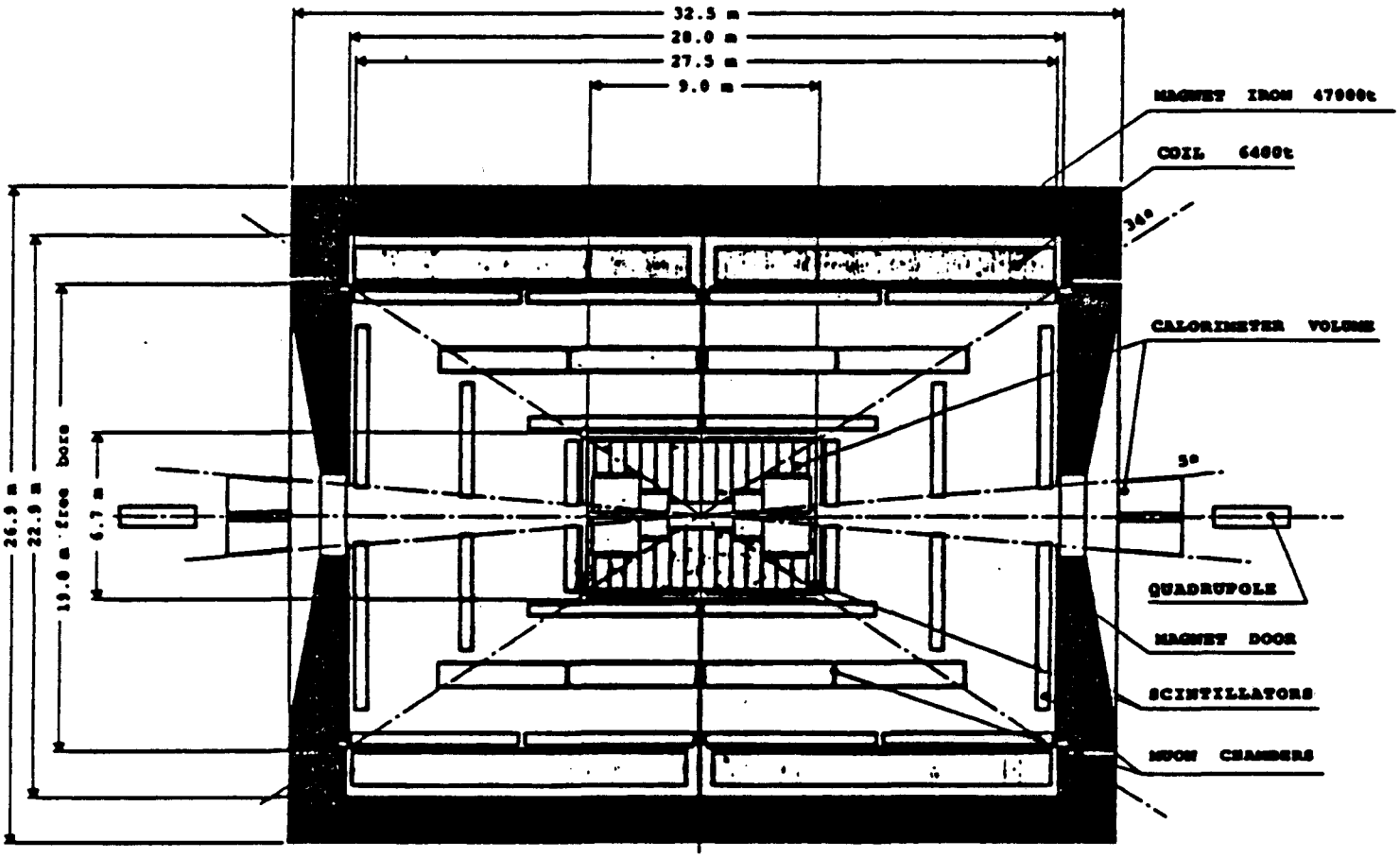

Figure 4a

Precision Muon Detector
Cost Estimating Model SSC Detector
November 1989 Version

End View

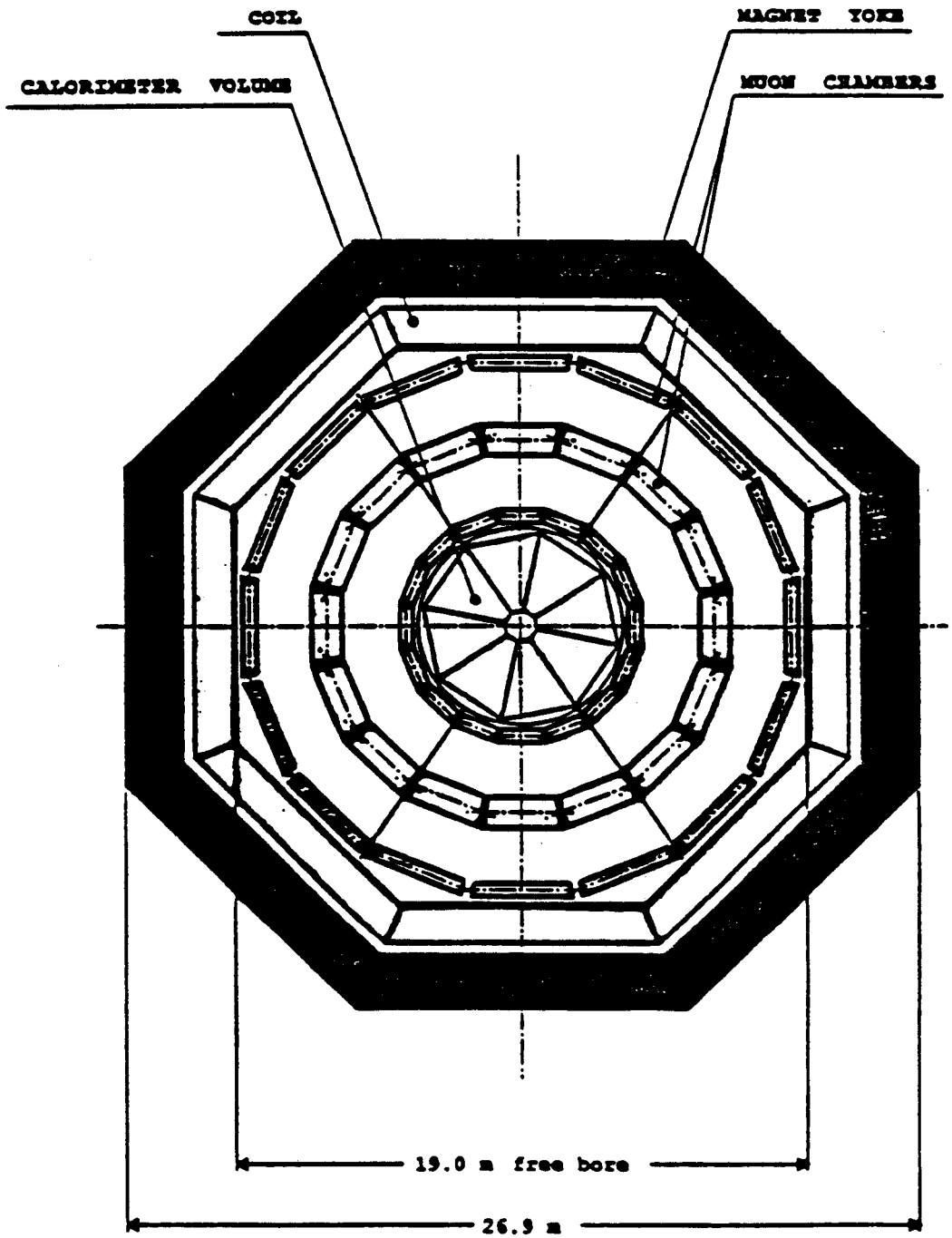

Figure 4b

Non-Magnetic Detector - The Non-Magnetic Detector (NMD) Model is a general-purpose 4π detector that does not incorporate a magnetic field in the central tracking region. The energy measurements in fine-grain calorimetry compensate for the absence of a central magnetic field for hadrons and electrons and large superconducting air-core toroids surround the detector to permit muon momenta to be measured. The detector elements are shown in Figures 5a, 5b.

The NMD aims at the detection and reconstruction of heavy new particles such as the Higgs boson and W', Z' vector bosons. The detector is also expected to be sensitive to other heavy particles such as heavy quarks and supersymmetric particles. Most of these very heavy particles will require sensitivity to decays of W's, Z^o's, and top particles. Reconstruction of these primary decay modes will in turn demand the capability of reconstructing leptons, isolated photons, and hadron jets with good angular and energy resolution. The detector must also have good coverage in η in order to ensure adequate hermiticity, hence good missing E_T resolution.

This detector concept features good performance in all of the needed parameters. Electrons, gammas, jets, and missing E_T are measured and identified by the fine-grained calorimetry augmented by the central tracking. The inability to measure the charge sign of the electron is balanced by the excellent muon momentum resolution that is obtained at all angles covered. The muon momentum measurement capability is a particular strong feature of this detector with its complement of air-core toroid magnets.

The elements of the NMD include a number of technologies among those accepted for the cost estimation exercise. The non-magnetic central tracker consists of a combination of straw tubes and transition radiation detectors (TRD's).

Electron identification is provided by transition radiation detectors (TRD's) integrated with the tracking. Two layers of 4 mm tubes are combined with each 1 cm of polyethylene foam radiator (for a total of 24 layers and 48 tubes on each track). This structure constitutes the central tracker. The straws are operated using a two-bit flash ADC with three threshold levels-minimum-ionizing, twice minimum, and minimum plus a detected transition radiation (TR) cluster. A total of 330,000 straws are included in the instrumented rapidity interval.

The calorimetry is based on U and LAr. This is a proven technology with good segmentation and tower geometry. The barrel and endcap sections have been supplemented with small-angle forward calorimeters to exploit fully the hermiticity of this design. The total number of electronic signal processing channels has been set at 120K, a compromise between the ultimate resolution and granularity which could be achieved with this technology and the practical realities of cost and construction time.

Directly outside of the calorimetry is a system of superconducting air core toroids. An analyzing magnet having a toroidal field is attractive for several reasons; there is no magnetic field on the beams or on the inner tracking or calorimetry; the bending of charged particles is such that the original radius-azimuth (R-ϕ) distribution of events is preserved; and the closed field implies that there is no return yoke with a corresponding saving in weight and an increase in flexibility. The muon trajectories are measured using high-precision wire chambers which are arranged around the air-core toroids to optimize the measurement of muon momenta. A total of 135K wires are included in the muon tracking system.

The cost details for the NMD are presented in Table 9.

Table 9

Non-magnetic Detector Model

NMD DETECTOR MODEL (10/89)

SYSTEM	UNIT	NO. OF UNITS	CODE	UNIT COST (000's)	SUBTOTAL	SUBSYSTEM SUBTOTAL	TOTAL	SUBSYS/TOTAL %
TRACKING								
WIRE PAD CHAMBERS	METER **2	25	TRD1	21	525			
STRAW CHAMBERS	KWIRES	330	TC1	100	33000			
						33525		7.0%
CALORIMETRY								
U/LAr - CENTRAL EM	TONNES	63	C2	26	1638			
U/LAr - CENTRAL HADRON	TONNES	1484	C2	26	38584			
U/LAr - ENDS EM	TONNES	18	C2	26	468			
U/LAr - ENDS HADRON	TONNES	606	C2	26	15756			
						56446		11.8%
PRECISION MUON DETECTOR								
CENTRAL	KWIRES	15	TC3	420	6300			
CORNER	KWIRES	24	TC3	420	10080			
FORWARD	KWIRES	96	TC3	420	40320			
						56700		11.8%
MUON TRIGGER	METER**2	2040	TS1	0.8	1632			
CENTER	METER**2	700	TS1	0.8	560			
FORWARD						2192		0.5%
SOLENOIDS, MISC. DET. STRUCTURE								
SUPERCONDUCTING TOROIDS - BARREL	SYSTEM	1	AM5	75000	75000			
SUPERCONDUCTNG TOROIDS - ENDS (2)	SYSTEM	2	AM4	25000	50000			
He CRYO SYSTEM	SYSTEM	3	AM6	2600	7800			
LAr CRYO SYSTEM	SYSTEM	1	C3	2000	2000			
						134800		28.1%
ELECTRONICS (INCLUDING TRIGGERING)								
TRACKING (SIMPLE)	KCHAN	330	E1	25	8250			
TRACKING (GENERAL)	KCHAN	100	E2	250	25000			
CALORIMETRY	KCHAN	120	E2	250	30000			
MUON TRACKING	KCHAN	135	E2	250	33750			
MUON TRIGGER	KCHAN	37	E2	250	9250			
						106250		22.1%
ONLINE COMPUTING	SYSTEM	1	E7	10000	10000			
						10000		2.1%
EDIA					79983			
(20% OF ABOVE)						79983		16.7%
							479896	
								10/30/89

Non Magnetic Detector
Cost Estimating Model SSC Detector
November 1989 Version

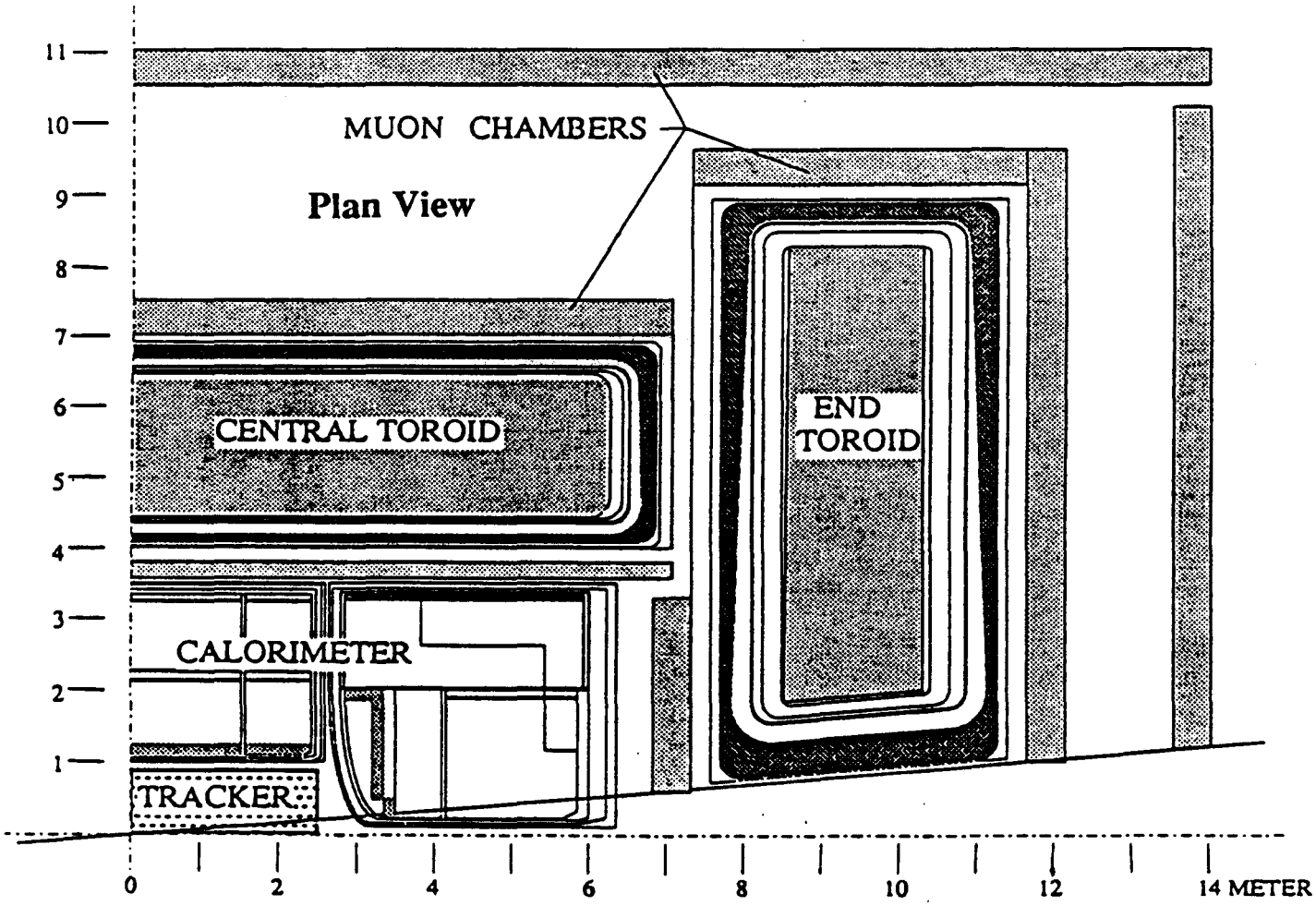

Figure 5a

Non Magnetic Detector
Cost Estimating Model SSC Detector
November 1989 Version

End View

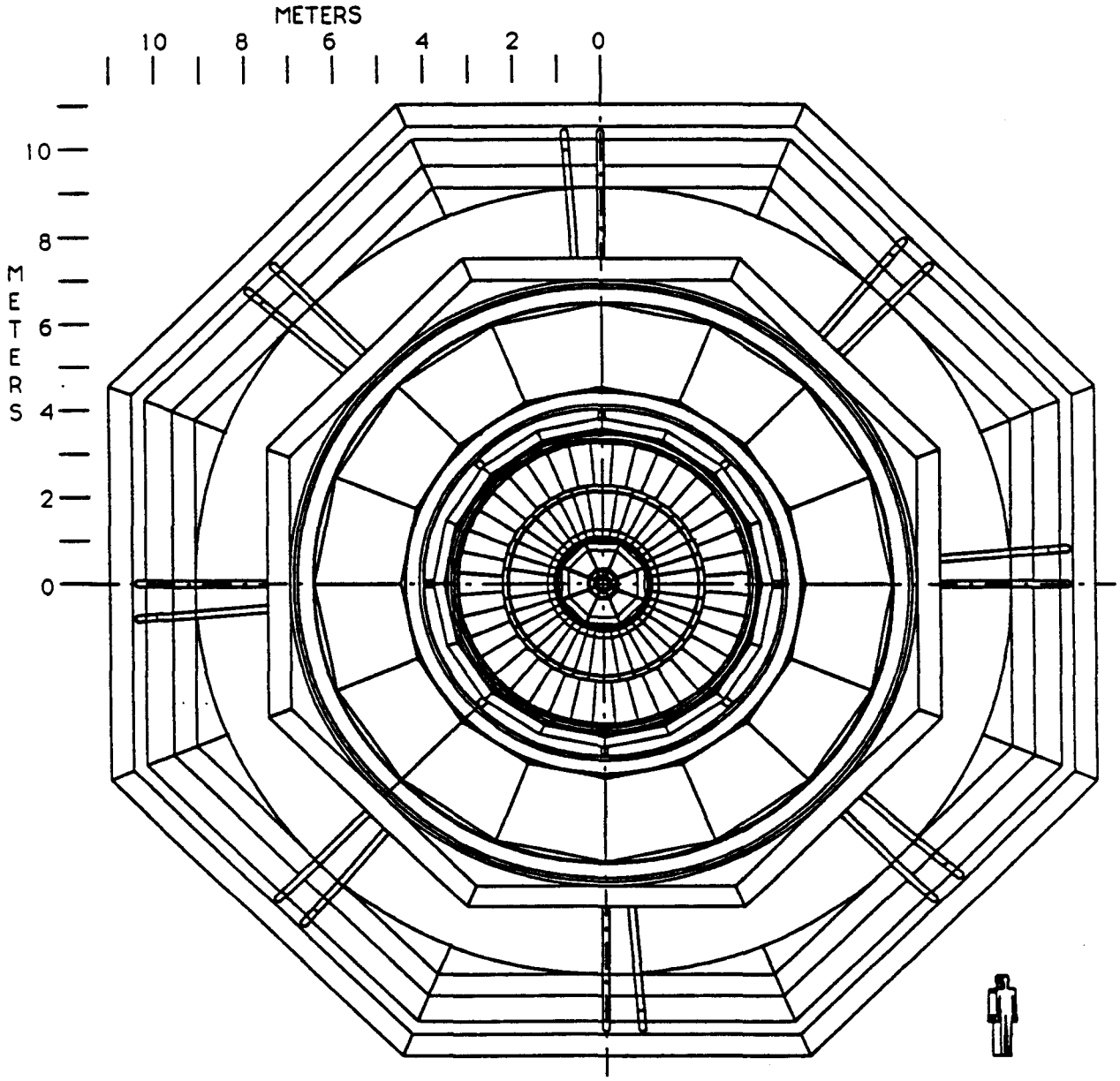

Figure 5b

Intermediate PT Model - The IPT detector is designed to study CP violation in the B meson system. At the SSC, 10^{12} B pairs will be produced in a run of about one year. Also, about 1% of all interactions will contain a B pair. These features make the SSC a unique laboratory for studying B physics in hadron interactions. Drawings showing the main features of the IPT detector are given in Figures 6a and 6b.

From the drawings, it can be seen that the detector consists of three parts: the central detector, the intermediate detector, and the forward detector. Each part has a complete complement of detector systems, and acts as a complete B hadron detector in its own right. Thus, tracking, particle ID, electromagnetic calorimetry, and muon detection are part of each of the three elements of the detector. The central detector covers one unit of rapidity, each intermediate arm covers two units of rapidity, and the forward arm covers two units of rapidity.

Momentum measurements for particle tracking rely on the magnetic field provided by two dipole magnets, each with a four-meter gap. The main magnet, which is four meters long, provides a field for both the central and intermediate detectors. The forward dipole supplies a bending field for the forward detector and is only six meters long. Each dipole has a central field of 1.0 Tesla. All magnets have superconducting coils.

The heart of the detector is the tracking system. The vertex detector is constructed of a silicon pixel detector with amplification, sparsification, and readout electronics mounted directly on the silicon. The vertex detector has a spatial resolution of 20 microns, and serves the function of unambiguously isolating secondary vertices in the interaction. The straw tube tracking system is designed to give 50 points per track; this granularity suffices to yield a momentum resolution of 1% for charged tracks, and allows tracks to be traced back to the decay vertex. The vertex detector and the main tracking chambers provide all tracking information for the central and intermediate detectors. The forward tracker has four stations with two planes per station.

Particle ID is done with the RICH, TRD, and TOF systems. The TOF and RICH provide hadron identification. The TRD's provide an electron tag. Electron identification is enhanced by the electromagnetic calorimetry which is used for gamma rejection as well.

The muon tracking system exists only in the intermediate and forward arms. In the intermediate region, 4 m of steel are used to reject hadrons. Ten planes of drift chambers are used to track the muon. In the forward region, 10 m of hadron absorber are used for hadron rejection and ten planes of drift chambers are used for tracking.

The detailed cost elements are given for the IPT Detector here as Table 10 .

Table 10
Intermediate P_T Detector

IPT Detector Model (10/89)

SYSTEM	UNIT	NO. OF UNITS	CODE	UNIT COST (000's)	SUBTOTAL	SUBSYSTEM SUBTOTAL	TOTAL	SUBSYS/TOTAL %
SPECIAL PURPOSE DETECTOR								
SI VERTEX	SYSTEM	3	SVD1	10000	26000			
						26000		9.1%
TRACKING								
GENERAL WIRE - CENTRAL	KWIRES	120	TC1	100	12000			
GENERAL WIRE - FORWARD	KWIRES	28	TC1	100	2800			
						14800		5.2%
RING IMAGING CHERENKOV COUNTERS								
CENTRAL - LIQUID	METER**2	32	RICH 1	175	5600			
INTERMEDIATE - LIQUID	METER**2	57	RICH 1	175	9975			
INTERMEDIATE - GAS	METER**2	20	RICH 1	175	3500			
FORWARD - GAS	METER**2	15	RICH 1	175	2625			
						21700		7.6%
TRANSITION RADIATION DETECTORS								
CENTRAL	METER**2	48	TRD1	21	1008			
INTERMEDIATE	METER**2	200	TRD1	21	4200			
FORWARD	METER**2	36	TRD1	21	756			
						5964		2.1%
TIME OF FLIGHT								
TRIGGER SCINTILLATOR - CENTRAL	METER**2	56	TS2	8	448			
TRIGGER SCINTILLATOR - INTERMEDIATE	METER**2	200	TS2	8	1600			
						2048		0.7%
CALORIMETRY								
CENTRAL	TONNES	140	C1	16.5	2310			
INTERMEDIATE	TONNES	630	C1	16.5	10395			
FORWARD	TONNES	80	C1	16.5	1320			
						14025		4.9%
MUON DETECTOR								
INTERMEDIATE - STRUCTURE	TONNES	19000	MS2	1.05	19950			
FORWARD - STRUCTURE	TONNES	5500	MS2	1.05	5775			
INTERMEDIATE - MUON TRACKING	KSENSE	8	TC1	100	800			
FORWARD - MUON TRACKING	KSENSE	2	TC1	100	200			
						26725		9.4%
SUPERCONDUCTING DIPOLES								
CENTRAL	SYSTEM	1	AM12	8620	8620			
FORWARD	SYSTEM	1	AM12	8620	8620			
						17240		6.0%
ELECTRONICS								
VERTEX DETECTOR - COMPLEX	KCHAN	2	E3	2500	3750			
TRACKING - GENERAL	KCHAN	148	E2	250	37000			
RICH - GENERAL	KCHAN	140	E2	250	35000			
TRD - SIMPLE	KCHAN	80	E1	25	2000			
TRD - GENERAL	KCHAN	3	E2	250	750			
TOF - GENERAL	KCHAN	34	E2	250	8500			
CALORIMETRY - GENERAL	KCHAN	39	E2	250	9750			
MUON DETECTOR - GENERAL	KCHAN	10	E2	250	2500			
						99250		34.8%
ON-LINE COMPUTING	SYSTEM	1	E7	10000	10000			
						10000		3.5%
EDIA								
(20% OF ABOVE)						47550.4		16.7%
							285302	
								10/30/89

Intermediate P_T Detector

Cost Estimating Model SSC Detector
November 1989 Version

Plan View

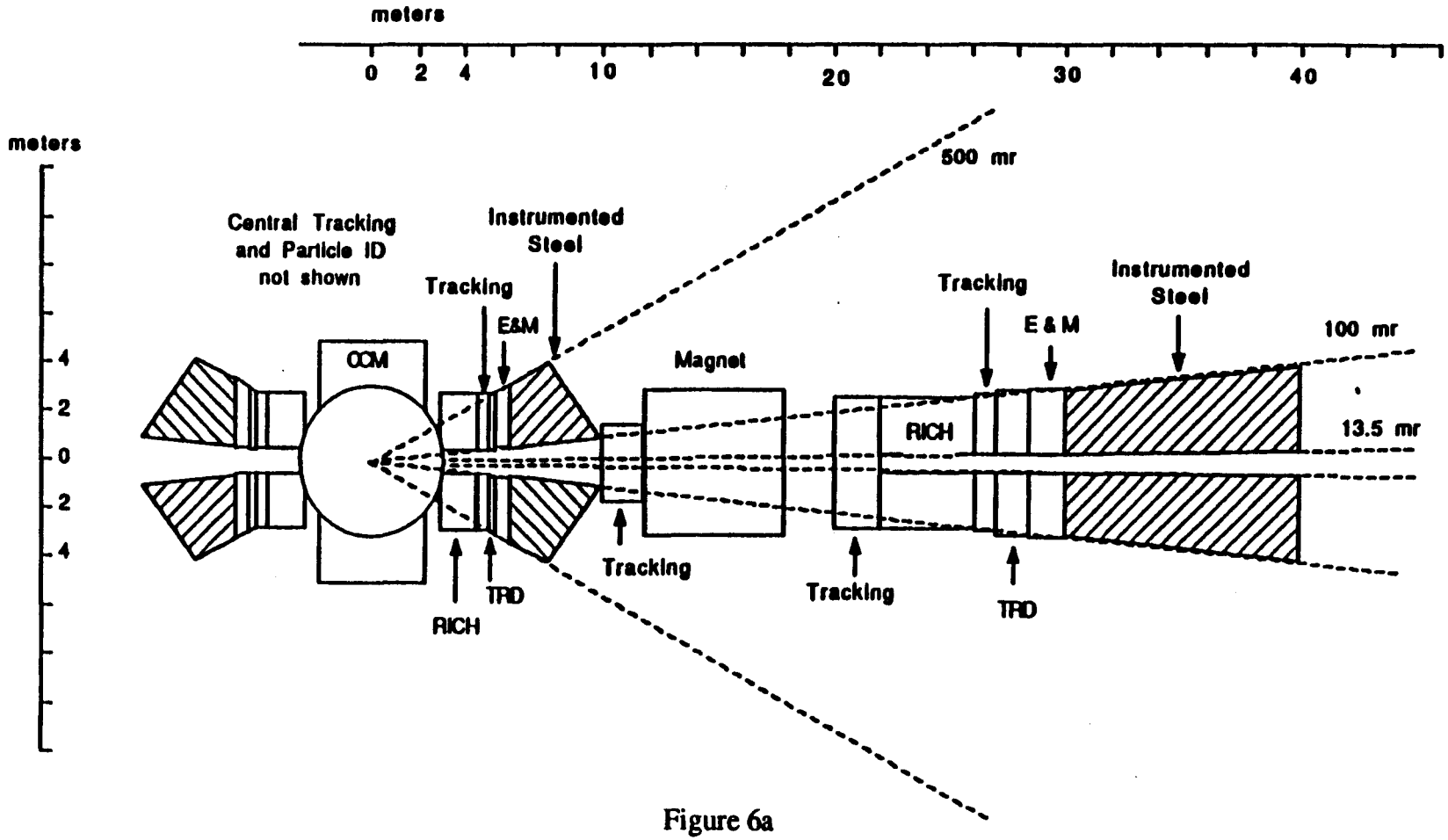

Figure 6a

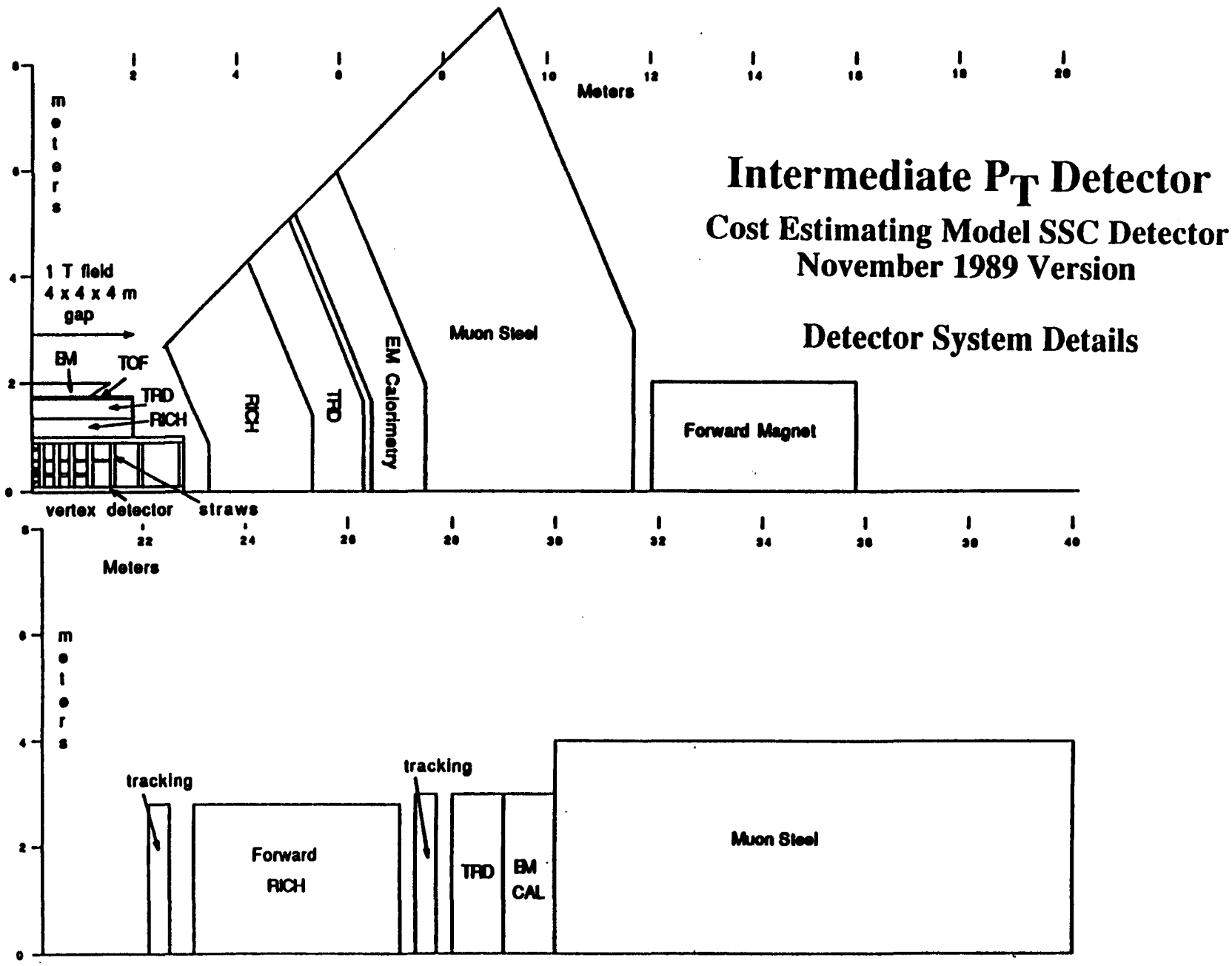
Intermediate P_T Detector
Cost Estimating Model SSC Detector
November 1989 Version
Detector System Details
Meters
meters
1 T field
4 x 4 x 4 m
gap
BM
TOF
TRD
RICH
vertex detector
straws
RICH
TRD
EM Calorimetry
Muon Steel
Forward Magnet
tracking
Forward
RICH
tracking
TRD
BM
CAL
Muon Steel

Figure 6b

APPENDIX A

DETECTOR COST ESTIMATING TASK FORCE

J. Bensinger	Brandeis University
D. Bintinger	SSCL
M. Breidenbach	SLAC
D. Eartly	Fermilab
T. Elioff	SSCL
M. Gilchriese	SSCL
H. Hofer	Eidg. Technische Hochschule, Zurich
T. Kirk*	Argonne National Laboratory
T. Kondo	KEK
A. Lankford	SLAC
B. Musgrave	Argonne National Laboratory
D. Reeder	University of Wisconsin
R. Stefanski	Fermilab
M. Strovink	LBL
D. Theriot*	Fermilab
R. Thun	University of Michigan

*Co-chairmen

APPENDIX B

ESTIMATE OF COMPUTING COSTS FOR DETECTOR SIMULATION AND DATA ANALYSIS

The computing requirements for detector design, including simulation and data analysis, were outlined in the Cost Estimate of Initial SSC Experimental Equipment, (SSC-SR-1023), published in June 1986. The report of the Off-line Computing Advisory Panel was included in this report and established an estimate for projected costs of hardware, software and telecommunications requirements for detectors and experiments. To accomplish this task, the advisory panel was charged as follows:

> "The Off-line Computing Advisory Panel will estimate the cost of the initial computing facilities at the SSC. In estimating the computing power necessary to process the data from the SSC detectors, the Panel will take the recommendations of the Detector Cost Model Advisory Panel as providing the appropriate scenario for the initial SSC detectors. The Panel should not concern itself with on-line computing facilities associated with each detector and necessary for its data acquisition. The computing power recommended, however, will allow for appropriate simulation studies necessary for the design of the detector and subsequent analysis of the data.
>
> "The Panel should assume that first pp collisions will take place in 1994. The Panel should use its best judgment in estimating the trends in the future developments in the computing area and in the associated costs. The costs should be expressed in FY86$."

In the 1986 report, the advisory panel identified two types of computing requirements: (1) interactive computing and (2) processor farms. In addition, the requirements for communications and printing were addressed. The two types of computing included the following:

1. Interactive Computing
   - Program development
   - Physics analysis
   - Engineering calculations
   - Library management
   - Conventional computing
2. Processor Farms
   - Reduction of raw data from SSC detectors
   - Monte Carlo simulations (events)

Interactive computing was to be provided by mainframe computer systems that would be configured to support the reduction, analysis and presentation of event data. The

suggested configuration had a capacity for 500 interactive users, storage systems for data access, archiving and application software products used for analysis, display, reporting and other related functions.

To provide the data reduction and event simulation function it was estimated that a minimum of 10,000 (VAX 780) MIPS of processing power would be required. This computing capability was projected to be in the form of relatively low cost processor farms. A number of different approaches were conceptualized, including the use of commercial microprocessors, emulating processors, multi-microprocessor systems such as those being implemented at Fermilab in the Advanced Computer Project. The 1986 panel, in its studies, estimated that the cost per MIP for these capabilities would be approximately $1K. This figure remains relatively accurate. The 1989 cost per MIP for commercial workstation technology is about $1K.

This assessment of computing resource requirements by the 1986 Off-line Computing Advisory Panel was further substantiated in 1988 by the Task Force on Computing for the SSCL and documented in SSC-N-579. This Task Force also analyzed the near-term computer requirements necessary to support detector design, simulation and data analysis. They estimated that approximately 3500 MIPS of computing power would be required by 1991 to support the detector effort. This study determined the requirements for the first phase of a ramp-up of computer capability which is projected to level off in about 1994 at a peak of approximately 10,000 MIPS.

Although the estimates made in 1986 of the computing power required to support detector design, simulation and data analysis were substantially correct, the assumptions today for acquiring the capability are different because of the advances in technology. More significantly, the costing developed in the 1986 report did not assume a ramp-up of resources during the design and construction period of these, but rather a cost associated with the specific operational year of the collider; namely, 1994/1995. It should be noted that the current schedule for the SSC indicates 1998 as the first year of operation.

Since computing technology is continually evolving, it is appropriate to reexamine how computing resources would be provided for detectors. As we draw closer to the operational phase of the Laboratory, technology will continue to improve and the ability to attain high-MIP computer resources at a lower cost will also improve. Additionally, as workstation technology becomes a more prevalent force and the ability to make effective use of the distributed computing through the use of improved networking techniques such as FDDI becomes reality, computing resources can be more effective tools for basic design as well as simulation and data analysis.

Computing requirements are driven in the next few years by detector simulation and design needs. These needs will require many specialized resources, from workstations to super computers, throughout the design phase of the experiments at the Laboratory. As the operational phase of the SSC approaches, we must start to develop those resources required for data reduction and analysis. This development should commence about 1994 and continue through 1998 and beyond.

The computing strategy for the SSC Laboratory is to implement a distributed environment of computers supported by local and wide area networks. This environment is essential to provide the responsiveness necessary for optimum productivity of personnel and brings the computing power to the user where it is is needed. Distributed computing begins on the desk of the scientist or engineer, allowing the capability of local computation on multiple tasks (multi-tasks) in a graphical window environment. Workstations will be clustered to file and/or compute servers. The workstations and servers will have a common hardware, software and network architecture. These clustered workstations will have access to more sophisticated resources through the networks. Resources called "Specialized Applications Servers" will support higher order applications such as engineering analysis codes, modeling and simulation software, CAD, databases, etc. High performance compute engines will be available on the networks to support compute intensive applications. These engines will have high MIP or MFlop capabilities specifically chosen to support scalar, vector and/or parallel processor related applications. These engines will be accessible to the user at the local workstation through, for example, X-window menus. Distributed computing will allow for expansion of necessary computing resources at a rate which is compatible with the needs of detector design and development, as well as data reduction and analysis. Thus, the Laboratory will be able to take advantage of the technology available at the time of actual need.

Acquisition of computing resources that will be specialized to data reduction and analysis may be delayed until later in the project. Adherence to industry standards in a distributed environment will allow for the expansion of computing from a development resource to an operational and experimental resource without major changes in overall technology. For example, high MIP engines will be used in the early years for detector development including simulation. As the Laboratory becomes operational, these resources can expand to support data reduction and analysis requirements. The objectives for defining the computing requirements necessary to support detector design and data analysis remain the same as outlined in the 1986 report. Because of advances in computing technology, the advent of the workstation and networking capabilities, the solutions to carrying out these objectives have changed.

Conventional Computing

The 1986 report described conventional computing to be a single computing center supporting interactive mainframe computers. This center was projected to support a user base of approximately 2000 with 500 active at any one time. This mode of conventional computing was the technology of the period and, therefore, the logical choice for the analysis. As stated previously, technology has rapidly moved toward distributed computing environments and integration of systems through networks. This is made possible partly by industry establishing standards on operating systems, networking protocols and open architectures, and the advances in VSLI technology increasing the power of the workstation and super minicomputers. As a result, we will take advantage of these technologies and develop conventional computing requirements in a distributed environment which includes workstations, servers, and high end computing resources. The high end computing resources may be specialized compute engines or super minis or mainframes. The key is that the environment will be distributed; therefore, the investment in systems can be ramped up as a function of immediate requirement rather than projected need. This will allow us to keep pace with technology as we expand our computing resources.

Data Reduction & Analysis

As identified in the 1986 report, the data reduction/analysis requirements are dependent on the ability to provide computing which will support event reconstruction and Monte Carlo event generation which are both CPU intensive applications. The solution to this effort, as suggested, may be the development of processor farms which were defined as a collection of large numbers of identical processors running identical programs on different events. Again, the technology is in our favor. It is impossible to specifically identify systems that could accomplish this task in the mid to late 90's timeframe. It is recommended that in the early stages of the detector development program, where data analysis is not a prevalent requirement, simulation efforts will be supported with conventional computing resources; that is, the integrated use of the distributed computing environment which will have a capability in excess of 5000 MIPS by 1994. At that time, we can develop data reduction/analysis computing resources using the latest in technology to increase the total MIP capability by an additional 10,000 MIPS by 1998.

SUMMARY

Cost Estimate

The estimated cost for a basic workstation, which includes adequate peripherals, is $10,000. To support the distributed computing concept, workstations will be grouped in clusters to local servers which will have access to specialized application servers.

For our estimate, we assume the average cost of a server to be $175,000. This cost includes hardware, peripherals, software and immediate storage. This average takes into account low end file servers and high end special application servers including the cost of software which may vary.

Compute engines will be used for modeling/simulation and will be provided in 50 MIP units. These will be used for modeling/simulation, detector design and experimental data analysis/evaluation and cost on an average of $250,000 per unit. These engines will be networked and will be accessible as a Laboratory resource. The 50 MIP engine was chosen as a unit of measure for cost estimation purposes only. These high performance processors may be multiples of 50 MIPS, such as a supercomputer. Actual unit processing power will depend on the state of the art at the time of acquisition.

Additionally, to support higher order computer requirements, it is assumed 10,000 MIPS of processing power will be provided in the Processor Farms. For this estimate, each MIP will cost approximately $1K.

The costs are summarized in Table I. Since there are substantial uncertainties in the cost per MIP or, more generally, in performance, the costs may be assumed to be in FY89 dollars. With our assumptions, the total cost of computing related to detectors is about $87M. This is to be compared with $71M (FY86$) from the 1986 study. Given the uncertainty in computing needs and capability, these two estimates are in essential agreement. The new estimate, however, assumes a more gradual build-up of resources.

TABLE 1

COST ESTIMATE OF COMPUTING RESOURCES FOR DETECTORS

Conventional Computing Resources (Distributed Environment)

Resource	Year that the Resource will be Acquired								
	90	91	92	93	94	95	96	97	98
Workstations									
Quantity	60	80	110	200	240	60	60	-	-
Cost($M)	$0.6	0.8	1.1	2.0	2.4	0.6	0.6		
Servers									
Quantity	6	8	11	20	25	6	5	-	-
Cost($M)	$1.0	1.4	1.9	3.5	4.3	1.1	0.9	-	-
Compute Engines									
Quantity	5	5	10	15	15	20	10	10	-
Cost($M)	$1.2	1.2	2.5	3.8.	3.8	5.0	2.5	2.5	-
Processor Farms									
Quantity(1000MIPS)	-	-	1	2	2	2	2	1	-
Cost ($M)	$-	-	1.0	2.0	2.0	2.0	2.0	1.0	-
Other Support*									
Cost	$0.4	0.7	1.6	2.8	4.1	5.0	5.7	5.9	5.9
Total Cost($M)	$3.2	4.1	8.1	14.1	16.6	13.7	11.7	9.4	5.9

* Includes support from administrative management and computer staff, maintenance of hardware and software, communications, telecommunications and archiving.

Total cost for all years is $86.8M.