SSCL-Preprint-538

SSCL-Preprint-538
May 1994
Distribution Category: 400

S. Baker
J. Bull
D. Goss

Leaching of Accelerator-Produced Radionuclides

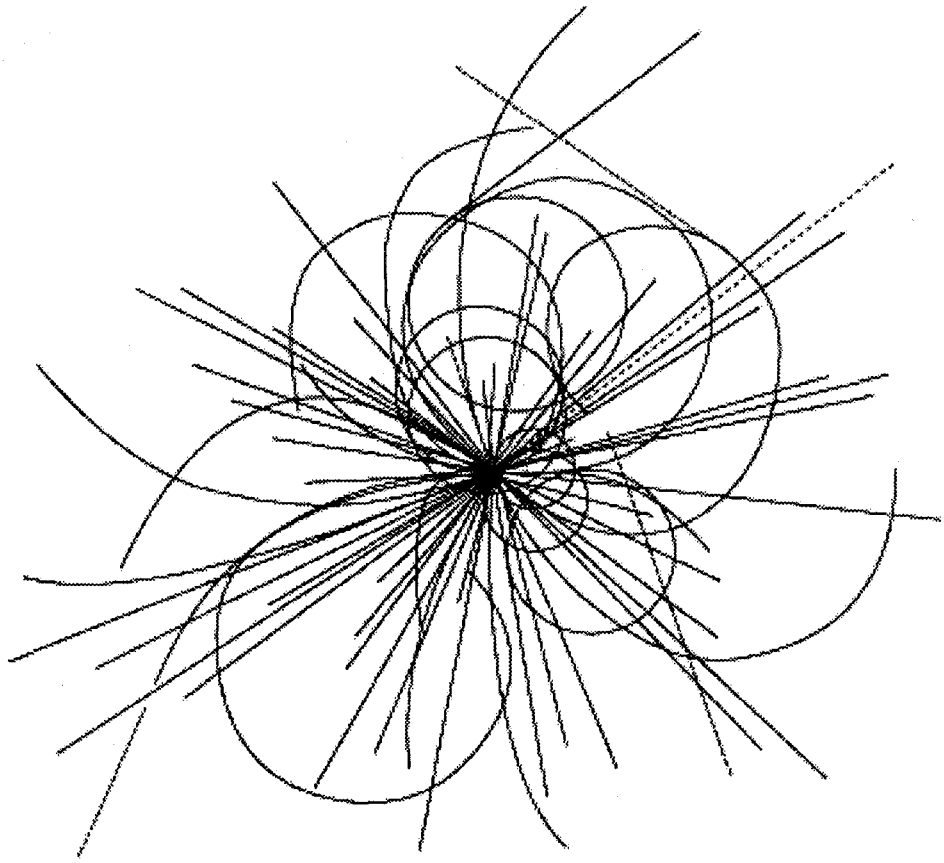

Superconducting Super Collider Laboratory

SSCL-Preprint-538

Leaching of Accelerator-Produced Radionuclides

S. Baker, J. Bull, and D. Goss

Superconducting Super Collider Laboratory*
2550 Beckleymeade Ave.
Dallas, TX 75237, USA

May 1994

*Operated by the Universities Research Association, Inc., for the U.S. Department of Energy under Contract No. DE-AC35-89ER40486.

LEACHING OF ACCELERATOR-PRODUCED RADIONUCLIDES

Samuel I. Baker,* Jeffrey S. Bull,* and David Goss†

***Abstract*–Leaching of radionuclides produced in soil and rock by high energy proton-induced radiation was studied for the SSC and CEBAF sites. Comparison was made with predictions of a Monte-Carlo code CASIM and previous results for the Fermilab site. The principal long-lived radionuclides were ^{3}H and ^{22}Na in agreement with Fermilab results. A few other radionuclides were present at lower concentrations in a subset of the samples. For example, ^{134}Cs was detected in a few SSC water samples and ^{7}Be and ^{54}Mn were present at higher concentrations in a CEBAF sample. Leaching from SSC chalk was dependent on previous weathering and on leaching time. The more soil-like marl and shale were leached more rapidly. Results of this study in conjunction with the SSC ground-water model show that adequate ground-water protection would result for loss of the entire proton beam in the SSC Collider tunnel.**

INTRODUCTION

COST-EFFECTIVE protection of the ground water from radioactivity produced by high energy particle accelerators requires knowledge of activation and leaching of the radionuclides in the geologic material outside the installed shielding. For the conceptual design of the Superconducting Super Collider (SSC), radioactivation of the rock and soil at the site in Ellis County (Texas) was based on measurements made on Illinois soils from Fermilab (Borak et al. 1972; Baker 1975; Baker 1985). To refine the design of the shielding for the SSC, Ellis County samples were irradiated at the Fermi National Accelerator Laboratory (Fermilab) using 800 GeV protons incident on a collimator which was essentially closed. A Monte Carlo computer program, CASIM (Van Ginneken and Awschalom 1975; Van Ginneken 1975), was used to simulate the nuclear cascade and determine the number of nuclear interactions produced in the samples. In addition, soil samples from the Continuous Electron Beam Accelerator Facility (CEBAF) and from Fermilab were also irradiated. Measurements were made of the radionuclides produced in the samples and, after stirring the samples in water, of the leached radionuclides. Some samples were set aside for one year in contact with the leach water to measure the increase

in radionuclide concentration as the leaching continued. The results are discussed as well as the their impacts on the shielding requirements for the Super Collider.

ACTIVATION OF SOIL AND ROCK

Fermilab Irradiations

As designed, the 87 km (54 mi) long Collider tunnel passes through three different rock formations: the Austin Chalk, the Ozan Formation (Lower Taylor Marl), and the Eagle Ford Formation. Borings were made to obtain geotechnical information about these materials. Cylinders 5 cm in diameter by 5 cm long were obtained by cleaving sections of rock core recovered from the holes. The materials are characterized as Taylor Marl, Austin Chalk, and Eagle Ford Shale, although there is some variation within the formation. For example, there is a bentonite (volcanic) clay layer typically 20-cm thick within the Austin Chalk. The Austin Chalk is primarily calcium carbonate while the marl and shale have more clay. The properties of the Ellis County geologic materials are provided in Table 1. Efforts were made to retain the moisture in the samples by proper sealing and by refrigeration until the samples were canned for the irradiation. In addition, samples were obtained of creek alluvium and soils developed over the rock formations. Smaller samples of the CEBAF soils from the Yorktown and Norfolk Formations were included. Three samples of Fermilab till were added for comparison with previous work (Baker 1975; Baker 1985).

The samples were irradiated at Fermilab under conditions typically encounted at high energy particle accelerators. The samples were placed near the collimator as shown in Fig. 1. The number of protons incident was chosen to produce an activation similar to that which might result from an accidental loss of the entire proton beam at a point in the Collider tunnel. In the initial irradiation a total of 2×10^{15} 800 GeV protons were incident upon the collimator. The activation occurred over a three week period. However, the samples were not retrieved until several months later. In order to obtain information on shorter half-life radionuclei, a second similiar irradiation was performed and the samples leached a week after the end of the irradiation.

All the samples in the first irradiation were assayed for gamma-ray emitting radionuclides using a germanium semiconductor detector at Scientech, Inc. in Carrollton, TX. The detector was calibrated using a mixed gamma-ray source distributed in chalk powder in a 5-cm diameter by 5-cm high container to match the geometry of the samples. A small number of cores from the second irradiation were assayed at Fermilab.

Radionuclide Production

The total number N_i of leachable atoms of the particular radionuclide produced in a unit volume of soil or rock may be written as

$$N_i = FPSL_i$$

where in the case of the irradiation F is the number of protons striking the collimator per pulse, P is the total number of pulses, S is the "star" density or number of stars (hadron-nucleus interactions) produced per unit volume of soil or rock per incident proton, and L_i is the number of leachable atoms of the i-th radionuclide that will be produced per star. L_i is related to the production factor K_i, the total number of atoms of the i-th radionuclide produced per star, by

$$L_i = K_i f_i$$

where f_i is the fraction of atoms of the i-th radionuclide leachable from the rock or soil. Assuming that the activation occurs in a time short compared to the half-life so decay during activation may be neglected, the expression for the concentration of the i-th radionuclide in the leach water is simplified. For the case where leaching is done by adding a volume of water equal in weight to the weight of the sample, the activity concentration C_i of the i-th radionuclide in the leach water may be written

$$C_i = 10^{-3} \frac{N_i \lambda_i}{\rho}$$

where C_i is in Bq m^{-3}, ρ is the wet density of the rock or soil sample, and λ_i is the decay constant for the i-th radionuclide:

$$\lambda_i = \frac{\ln 2}{T_i}$$

where T_i is the half life of the i-th radionuclide in seconds. Note that C_i is not the concentration of the radionuclide in the water within the soil or rock matrix.

LEACHING OF RADIONUCLIDES

Rapid Leaching Technique

The rapid technique used to leach the samples was one found equivalent to percolation of water through the samples (Baker 1975; Baker 1985). The sample was placed in a beaker small enough that an amount of distilled water equal in weight to the weight of the sample covered the sample. It was stirred with a magnetic stirrer for one hour. Except for the special studies discussed later in this paper, all of the samples were leached uncrushed. Some samples were leached with water having pH=5 with no change in leaching properties because of the buffering properties of the alkaline samples from the SSC formations. The water was centrifuged and decanted. All samples leached in this manner were diluted to 5.00×10^{-4} m^3 and counted in a Marinelli beaker placed on a germanium semiconductor detector which had been calibrated using a mixed gamma-ray source which could be traced to a National Institute of Standards and Technology (NIST) standard. Also, some samples were set aside in contact with leach water for one year and then the water was assayed for radionuclides.

The results using the rapid leaching technique were corrected for decay and the dilution to 5.00×10^{-4} m^3. These are presented in Tables 2 – 6. From the measured concentrations of radionuclides in the leach water and the star densities calculated using the radiation transport code CASIM (Van Ginneken 1975) to simulate the irradiation conditions, one can determine the values for L_i, the number of leachable atoms per star. Also given is the maximum concentration in the leach water at a meter from the enclosure (tunnel) in the particular soil or rock for the instantaneous point loss of 4×10^{14} 20 TeV protons, as predicted by Monte-Carlo calculations using the code CASIM. This corresponds to full beam loss accident in the Collider at maximum design intensity. The extra shielding provided by the 25-cm thick liner in Taylor Marl and Eagle Ford Shale is not taken into account. The Monte-Carlo predictions were normalized to the measurements by determining the number of 20 TeV protons which produced the amount of activation equivalent to that measured at 800 GeV. This was done using the energy dependence $E^{0.8}$ (Jackson 1987, p. 26). The concentration at one meter corresponds to the average concentration within a region 4 m radially out from the enclosure. This region contains 99.9% of the radioactivity at that location along the direction of the protons (Baker et al. 1993; Romero et al. 1994).‡ Also given in the tables is the drinking water limit if the particular radionuclide is the only contributor to the dose.§

The number of 800 GeV protons incident was carefully recorded during the first irradiation and the comparison with CASIM predictions for Fermilab soils made at 800

GeV. For the second irradiation the number of protons was not recorded; however samples of Fermilab till were included and the results normalized to the activation concentration of ^{22}Na observed, using the production factor 0.02 atoms per star previously determined (Gollon 1978). The errors quoted in the tables are the standard statistical errors resulting from combining the results for a number of samples. If no error is given, there was only one measurement made. The error associated with assaying the samples was much smaller, typically about 10%, and was not included. For low concentrations that uncertainty was around 20%. The absolute accuracy of the number of leachable atoms per star is dependent on the calibration using CASIM. The measured concentration was found to be within a factor of three of that predicted using CASIM at 1.2 m from the enclosure at Fermilab (Baker 1985). The error introduced by using CASIM in this leaching study is smaller since these samples were located closer to the loss point (at an earlier stage in the cascade). The systematic errors introduced by using CASIM are cancelled in part if CASIM is also used to predict star densities for other conditions, such as the collider beam accident.

The percentage of ^{22}Na produced which is leachable can be relatively easily determined because the sample can be assayed for ^{22}Na by detecting the 1.27-MeV gamma ray emitted in the decay of ^{22}Na. The percentage of ^{3}H (tritium) produced which is leachable is not so easily determined because only a low energy β–particle is emitted (18-KeV endpoint) which is absorbed in the sample. The technique used to determine the amount of ^{3}H produced was to distill the sample overnight at 115 C and collect the water driven off. This water was then assayed for ^{3}H using a liquid scintillation counting technique. The total amount of ^{3}H was determined and was divided by the weight of the sample to find the concentration. The assumption is made that all the ^{3}H produced in the sample which could be leachable is transferred to the water and comes out in the distillation process. Thus, the percentage of ^{3}H actually leached in a certain length of time can then be determined. The distillation was only done for a limited number of samples. These results are given in Table 5. Only a few samples were set aside for one year to measure how much more ^{3}H and ^{22}Na would be leached. These results are given in Tables 4 and 5.

Comparisons with Other Leaching Techniques

The rapid leaching technique was based on percolation tests using Fermilab sand and gravel (Baker 1975). The rapid leaching technique gave results comparable to the results of these tests. In this work a percolation test was conducted on Austin Chalk by crushing a sample of unfractured chalk to grains less than 3 mm in linear dimension,

placing the sample in a 2.50×10^{-4} m^3 burette, and percolating water through it. A one-hour holding time was required before each sample was collected. The results are given in Table 6. Also provided in Table 6 are the results obtained by stirring another unfractured (and uncrushed) sample of the same core. In this case to obtain comparable results, care was taken to cover the sample with five separate aliquots of water each 20% by weight of the core. Each aliquot was stirred for one hour and collected. These techniques use an amount of water equal in weight to the weight of the sample. For comparison, the EPA toxicity characteristic leaching procedure (TCLP) for determining the toxicity of samples allows for a dilution of 20 times.[11]

DISCUSSION

Worst Case Scenerio

Preliminary results based on Fermilab soils and dilution models (Jackson 1987; Toohig 1987) indicated that a point loss of the entire proton beam in the Collider tunnel could be tolerated without elevating the local drinking water radionuclide levels above the EPA limits. A distance of 45.7 m (150 ft) to the nearest well was specified to facilitate this. After the SSC site was chosen, the question of rapid movement of radionuclides in fractures was addressed. There was concern that a loss could occur in a fracture zone and radionuclides could be transported to the nearest well in a time short compared to the half-lives of ^3H and ^{22}Na, the two long-lived radionuclides found to be of primary concern in earlier studies. The results in Tables 2 – 5 show that in the worst case of a point loss of the entire proton beam in the Collider tunnel the concentrations at 1 m from the tunnel will be lower than the EPA limits. Over half of the tunnel was to be constructed in Austin Chalk. The concentrations were lowest in that case for two reasons: (1) The ^{22}Na activation of the chalk was lower because it is approximately 85% calcium carbonate and ^{22}Na cannot be produced by spallation processes in carbon and oxygen; and (2) the chalk is not as leachable in a short time period as is the more soil-like marl or shale. Calculated leaching depth rates for chalk are 0.5 mm the first hour and 1.6 mm for one year. The ratio of these rates is 3.2 (one year to one hour) and is in good agreement with the experimental ratio of 4.4 for ^{22}Na given in Table 4. The tunnel sections in Eagle Ford Shale and Taylor Marl were provided with a 0.23 m (9 in) thick liner for structural reasons. This would have provided approximately a factor of two reduction in activation due to the additional shielding.

Implications for a Ground-Water Model

In the few locations where proton beam losses were expected (beam absorbers, scrapers, interaction halls) proper shielding can be provided and included in the design. This work is reported in the companion paper on the SSCL ground-water model. It should be noted that the model is based on meeting the ground-water limits at 1 m at saturation for the radionuclides. This allows the activity to build up over the years and allows one to sample and verify that the limits are met. In the case of a point loss of all the beam in the Collider, recovery from such an event is long enough to treat the event separately and not have to require saturation.

The Super Collider tunnel is located in an aquitard, i. e., the movement of water through the rock is greatly retarded in comparison with movement in an aquifer which is typically a sandstone formation from which large volumes can be pumped. As a result, leaching of radionuclides occurs at a relatively slow rate through the bulk material. It is true that fractures exist and water movement can be rapid through the fractures; however a smaller volume of rock will be leached in that case. The radioactivity could build up for years before leaching occurred in the bulk material. For this reason the concentration in the water within the rock matrix could become elevated. See the subsection on early warning techniques below.

Percolation vs. Stirring

As a check on earlier work comparing percolation and stirring for sand and gravel (Baker 1975), a sample of unweathered, unfractured Austin Chalk was crushed using a commercial grinding mill. The ^{22}Na collected by percolation of the water through the sample (Table 6b) was clearly greater than stirring unweathered, unfractured chalk (Table 6a). This shows a dependence on the exposed surface area since crushing results in more exposed surface area. A similar result was obtained by stirring weathered, unfractured Austin Chalk and comparing that with stirred unweathered, unfractured chalk. This indicates that the weathering process increases the leaching depth rates. In the earlier work the samples did not need to be altered for percolation.

Other Radionuclides

Other radionuclides were detected besides ^{3}H and ^{22}Na; however they were often in concentrations too low to be measured accurately. Leaching began within one week of the end of the second irradiation and assaying of the leach water was completed in less than one month after the end of the irradiation in order to search for short-lived radionuclides. Results in Table 3 show a few samples with measurable ^{7}Be. This radionuclide has a 53

day half life. It has a strong chemical affinity for soil and thus has a relatively long transport time. This is demonstrated by its high concentration in a sample of water irradiated along with the soil and rock samples and its low concentration in leach water from the soil and rock samples themselves.¶ Results in Table 3 indicate that ^{54}Mn with 312 day half life can be leached to a small degree from Ellis County rock. Note that the concentration measured in a CEBAF Norfolk Formation sample was about 10% of the EPA limit. Earlier work indicated that over 90% of the dissolved ^{54}Mn is picked up by non-activated soil (Borak et al. 1972). No ^{7}Be or ^{54}Mn was detected in the leach water from another sample of CEBAF Norfolk Formation soil although the ^{22}Na concentration was about the same. One sample of CEBAF Yorktown Formation soil had elevated levels of ^{54}Mn. Thus, the leaching of ^{7}Be and ^{54}Mn is sample dependent. One Taylor Marl sample also had measurable concentrations of leachable ^{60}Co and ^{134}Cs. These are produced by neutron capture, probably in trace amounts of natural cobalt (^{59}Co) and natural cesium (^{133}Cs) present in the sample. The values for L_i were 1.3×10^{-5} and 1.6×10^{-5} leachable atoms per star for ^{60}Co and ^{134}Cs, respectively. The observed concentrations were more that a factor of ten below the EPA limits. Attempts were made to determine the concentration of ^{45}Ca; however the technique used to separate the calcium from the sodium gave low yields for ^{45}Ca in the "spiked" samples. As a result, no ^{45}Ca was detected in the soil and rock samples above the detection limit.

Early Warning Techniques

Distillation concentrates the tritium in a relatively small volume of water, the water present in the sample. This water is typically 15% by weight and occupies about a third of the volume of the sample. For the purposes of meeting the regulatory limits, one should use the percolation or stirring method since that technique simulates leaching *in situ* (Baker 1985). However, for the purpose of early warning to detect a problem before the concentrations reach EPA limits, one should distill the solid sample and analyze the distillate for ^{3}H. Also, one should assay the sample for gamma-emitting radionuclides, primarily ^{22}Na. Since most of the ^{22}Na will still remain in the sample even if it has already been leached (Tables 2 and 4), this measurement will provide an early warning. For the case when no leaching had occurred previously, enhancement factors of 27 for tritium and seven for ^{22}Na were realized experimentally, starting with solid rock cores of unfractured Austin Chalk, compared to stirring of the sample in an equal amount of water by weight for one hour. Using CASIM and the leaching results presented in this paper, one can determine the ratio of ^{3}H to ^{22}Na expected in the solid samples. Assaying the samples for ^{22}Na gives the amount of ^{22}Na actually produced, within about a factor of two. Using the

ratio gives the amount of leachable ^{3}H expected. If the amount of ^{3}H observed by distillation is much lower than that expected, leaching has occurred *in situ.*

CONCLUSIONS

Except for an occasional sample which yields low concentrations of ^{134}Cs, the radioactivation of Ellis County rocks and soils produces the same radionuclides as observed elsewhere (Borak et al. 1972). CEBAF samples also produced the same radionuclides although the amount of leachable ^{54}Mn in one sample was higher than expected. The production of ^{22}Na in Austin Chalk, the material through which over half of the SSC Collider tunnel was to have been bored, was lower than typical because of the high carbonate content, and the leaching from Ellis County rock was lower than from soils. Leachable ^{3}H was also lower for leaching from rock than from soil.

The EPA limits for radionuclides in drinking water can be met in the ground water at one meter from the Collider tunnel. The design of other SSC facilities can be refined to meet the limits in a cost effective manner utilizing these leaching results. The ground-water model based on concentration at one meter for a point loss of the entire proton beam is an appropriate one to use for the Collider tunnel.

Acknowledgements—This work was supported by the U. S. Department of Energy under Contract DE-AC3589ER40486. We would like to thank the Fermilab Accelerator and Research Division staffs and Steve Butala, in particular, for sample irradiation and the Fermilab ES&H Section and, in particular, Steve Carrigan, Darrel Bancroft, Steve Benesch, Peter Hojvat, and Paul Kesich for assisting with the leaching of all samples, the preparation of "spiked" samples, and the assaying of part of the second set of cores. The work of Scientech, Inc. and, in particular, Kert Surface in assaying all of the liquid samples and the first set of cores is acknowledged.

REFERENCES

Baker, S. I. Soil activation measurements at Fermilab. Paper presented at the Third Environmental Protection Conference, ERDA Publ., ERDA-92, CONF-750967 : 329-346; 1975.

Baker, S. I. Fermilab soil activation experience. Paper presented at the Fifth DOE Environmental Protection Information Meeting, DOE Publ., CONF-841187: 673-683; 1985.

Baker, S. I.; Bull, J. S.; and Stapleton, G. B. Groundwater activation calculations at the SSC. Paper presented at the annual meeting of the Health Physics Society, 1993.

Borak, T. B.; Awshalom, M.; Fairman, W.; Iwami, F.; and Sedlet, J. The underground migration of radionuclides produced in soil near high energy proton accelerators. Health Phys. 23: 679-687; 1972.

Gollon, P. J.; Soil activation calculations for the anti-proton target area. Fermi National Accelerator Laboratory Report, TM-816, 1978.

Jackson, J. D. (editor); SSC environmental radiation shielding. Task force report, SSC Central Design Group. SSC Laboratory Report SSC-SR-1026, 1987.

Romero, V.; Baker, S.; Bull, J.; Coulson, L.; Goss, D.; and Stapleton, G. SSCL groundwater model. SSC Laboratory Report SSCL-SR-1233, 1994.

Toohig, T. E. (editor); Workshop on radiological aspects of SSC operations. Task force report, SSC Central Design Group. SSC Laboratory Report SSC-SR-1031, 1987.

Van Ginneken, A.; Awshalom, M. High energy particle interactions in large targets. Fermi National Accelerator Laboratory Publication, 1975.

Van Ginneken , A.; CASIM. Program to Simulate Hadronic Cascades in Bulk Matter, Fermi National Laboratory Report FN-272, 1975.

Footnotes

* Superconducting Super Collider Laboratory, 2550 Beckleymeade Ave., Dallas, TX 75237

† Nebraska Wesleyan University, 5000 St. Paul Ave., Lincoln, NB 68504

‡See the companion paper for a more complete discussion of the SSCL ground-water model.

§EPA limit for a public drinking water supply, U. S. Code of Federal Regulations, 40 CFR 141

‖ U. S. Code of Federal Regulations 40 CFR 162.24 and Appendix II to 40 CFR 261—Method 1311: TCLP procedure

¶ Note that ^{7}Be and ^{3}H can be produced in water by spallation of the oxygen in H_2O.

Figure Captions

Fig. 1. Experimental arrangement for irradiation of samples.

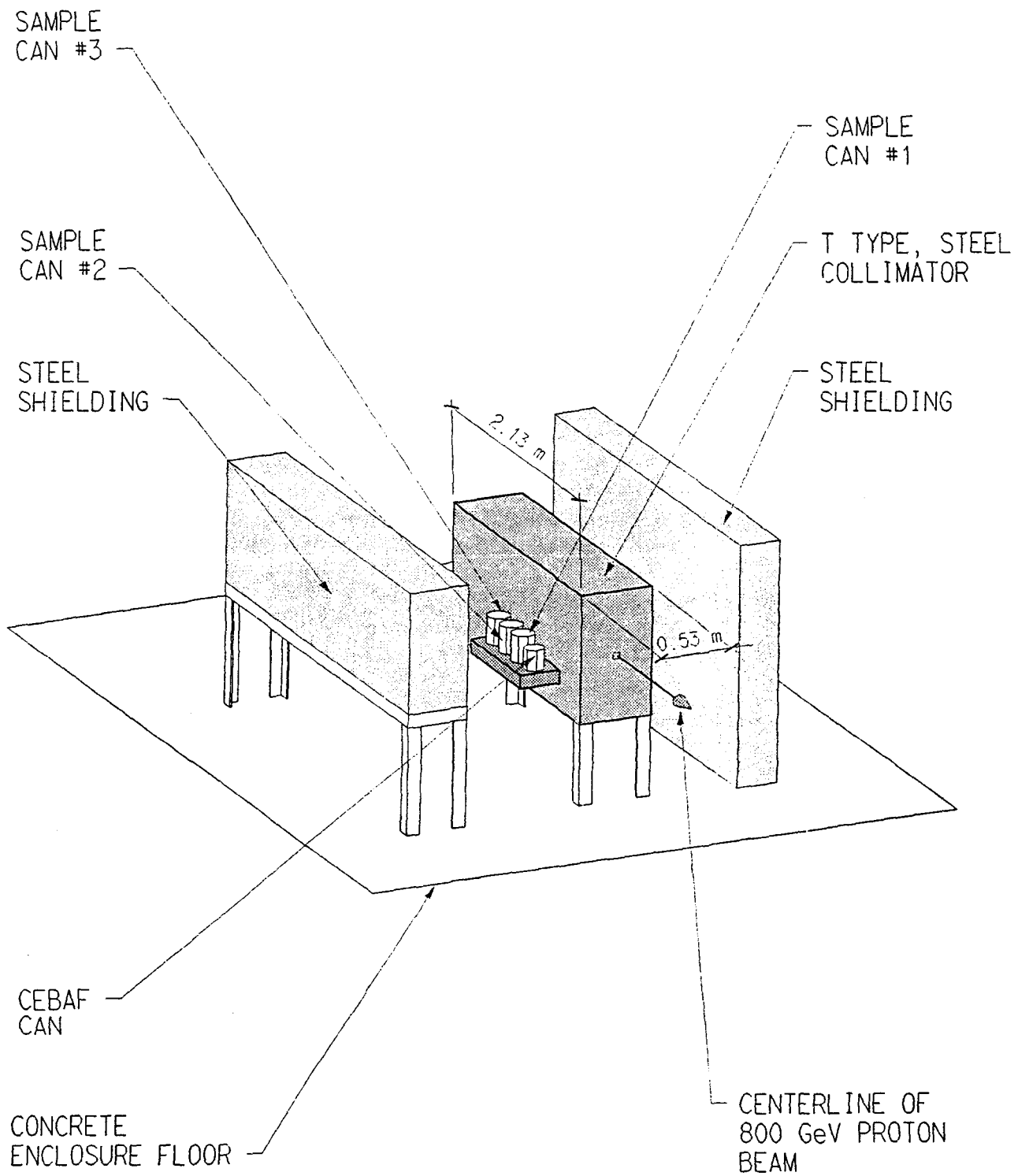

Figure 1
IRRADIATION OF SAMPLES

Table 1. Properties of SSC rock and soil samples

Material	Austin Chalk	Taylor Marl	Eagle Ford Shale	Terrace deposits of quaternary age	Quaternary alluvium and soil
Density (mg m^{-3})	2.30	2.23	2.21	2.09	1.99
Composition by percentage:					
$CaCO_3$	85	23	6	25	50
Clay	9	60	80	35	30
C	2	1	1	--	--
SiO_2	3	15	12	30	15
$KAlSi_3O_8$	--	--	--	5	5
FeS_2	1	1	1	--	--

Table 2. ^{22}Na concentrations at 1 m for a point loss of 4×10^{14} 20 TeV protons (2.4×10^{15} stars m^{-3} at 1 m)

Material	^{22}Na activity (Bq Kg^{-1})	^{22}Na activity (pCi g^{-1})	Activation cross section, K_i (atoms $star^{-1}$)	Leachable ^{22}Na (Bq m^{-3})	Leachable ^{22}Na (pCi ml^{-1})	^{22}Na % leachable	Leachable ^{22}Na cross section, L_i (atoms $star^{-1}$)
Austin Chalk	46 ±7.7	1.2 ± 0.2	5.0×10^{-3}	580 ± 150	0.016 ± 0.004	1.3	6.6×10^{-5}
Argillaceous Chalk	95 ± 37	2.6 ± 1.0	1.1×10^{-2}	1320 ± 340	0.036 ± 0.009	1.4	1.5×10^{-4}
Bentonite				8000	0.22		9×10^{-4}
Limestone	70	1.9	8×10^{-3}	200	0.005	0.3	2×10^{-5}
Taylor Marl	200 ± 77	5.4 ± 2.1	2.3×10^{-2}	3070 ± 250	0.083 ± 0.007	1.5	3.4×10^{-4}
Eagle Ford Shale	250 ± 68	6.7 ± 1.8	2.8×10^{-2}	4900 ± 2500	0.13 ± 0.07	2.0	5.6×10^{-4}
Ellis County soil	58 ± 4.6	1.6 ± 0.1	6.6×10^{-3}	5800 ± 1500	0.16 ± 0.04	10.0	6.6×10^{-4}
Fermilab Soil	180	4.8	2.0×10^{-2}	4300 ± 430	0.12 ± 0.01	2.4	4.9×10^{-4}
CEBAF Yorktown Soil	120	3.1	1.0×10^{-2}	12,300 +- 3100	0.33 ± 0.08	10.5	1.4×10^{-3}
CEBAF Norfolk Soil	250 ± 37	6.8 ± 1.0	2.9×10^{-2}	7400	0.20	2.9	8.3×10^{-4}
EPA Limit				14,800	0.40		

Table 3. ^{3}H, ^{7}Be, and ^{54}Mn concentrations at 1 m for a point loss of 4×10^{14} 20 TeV protons (2.4×10^{15} stars m^{-3} at 1 m)

Material	Leachable ^{3}H (Bq m^{-3})	Leachable ^{3}H (pCi ml^{-1})	Leachable ^{3}H cross section, L_i (atoms $star^{-1}$)	Leachable ^{7}Be (Bq m^{-3})	Leachable ^{7}Be (pCi ml^{-1})	Leachable ^{7}Be cross section, L_i (atoms $star^{-1}$)	Leachable ^{54}Mn (Bq m^{-3})	Leachable ^{54}Mn (pCi ml^{-1})	Leachable ^{54}Mn cross section, L_i (atoms $star^{-1}$)
Austin Chalk	$2.3 \times 10^{4} \pm 5.2 \times 10^{3}$	0.61 ± 0.14	1.2×10^{-2}	2.3×10^{3}	0.062	2×10^{-5}	1.0×10^{2}	0.0027	4.0×10^{-6}
Argillaceous Chalk	$2.9 \times 10^{4} \pm 1.2 \times 10^{4}$	0.77 ± 0.31	1.5×10^{-2}				7.8×10^{1}	0.0021	2.5×10^{-6}
Bentonite	3.4×10^{5}	9.1	1.8×10^{-1}						
Limestone	4.3×10^{3}	0.12	2.3×10^{-3}						
Taylor Marl	$5.1 \times 10^{4} \pm 4.6 \times 10^{3}$	1.4 ± 0.1	2.7×10^{-2}	4.9×10^{3}	0.13	3×10^{-5}	2.9×10^{2}	0.0079	1.1×10^{-5}
Eagle Ford Shale	$6.3 \times 10^{4} \pm 1.3 \times 10^{3}$	1.7 ± 0.3	3.3×10^{-2}						
Ellis County soil	$1.4 \times 10^{5} \pm 3.4 \times 10^{4}$	3.8 ± 0.9	7.6×10^{-2}	$<6.0 \times 10^{2}$	<0.02	$<3 \times 10^{-6}$			
Fermilab soil	8.1×10^{4}	2.2	4.4×10^{-2}						
CEBAF Yorktown soil	$2.5 \times 10^{5} \pm 9.2 \times 10^{4}$	6.6 ± 1.7	1.3×10^{-1}				5.5×10^{3}	0.15	2.1×10^{-4}
CEBAF Norfolk soil	9.8×10^{4}	2.7	5.3×10^{-2}						
Water	4.4×10^{5}	12	5.5×10^{-1}	1.1×10^{6}	29	1.6×10^{-1}			
EPA limit	7.4×10^{5}	20		1.5×10^{6}	40		7.4×10^{4}	2.0	

Table 4. ^{22}Na leaching comparison

Material	^{22}Na percentage leachable after one hour	^{22}Na percentage leachable after one year	Ratio
Weathered Austin Chalk	1.6	7.1	4.4
Eagle Ford Shale	2.0	7.2	3.6
Ellis County soil	9.7	32.	3.3
CEBAF Norfolk soil	2.9	7.0	2.4

Table 5. ^{3}H leaching comparison

Material	^{3}H percentage leachable after one hour	^{3}H percentage leachable after one year	Ratio
Weathered Austin Chalk	41	66	1.6
Argillaceous Chalk	8		
Weathered Taylor Marl	36		
Eagle Ford Shale	27	100	3.7
Ellis County soil	15	91	6.1
Fermilab soil	27		
CEBAF Norfolk soil	21	32	1.5

Table 6. Leaching from Austin Chalk

6a. Stirring of unfractured chalk in water: ^{22}Na results

Sample number (in order collected)	Weight of water (as percentage of sample weight)	^{22}Na collected (as percentage of total ^{22}Na in sample)	^{22}Na collected (as percentage of total ^{22}Na leached)
1	20	0.104	44
2	20	0.055	24
3	20	0.034	14
4	20	0.024	9
5	20	0.020	9
	100	0.237	100

6b. Percolation of water through crushed chalk: ^{22}Na results

Sample number (in order collected)	Weight of water (as percentage of sample weight)	^{22}Na collected (as percentage of total ^{22}Na in sample)	^{22}Na collected (as percentage of total ^{22}Na leached)
1	20	0.93	54
2	20	0.39	25
3	20	0.18	11
4	20	0.09	7
5	20	0.05	3
	100	1.64	100

6c. Percolation of water through crushed chalk: ^{3}H results

Sample number (in order collected)	Weight of water (as percentage of sample weight)	^{3}H collected (as percentage of total ^{3}H in sample)	^{3}H collected (as percentage of total ^{3}H leached)
1	20	30	67
2	20	12	26
3	20	2	5
4	20	<0.5	1
5	20	<0.2	<1
	100	44	100