SSCL-Preprint-449

SSCL-Preprint-449
June 1993
Distribution Category: 414

G. Deis
R. Warren
D. Richied
N. Martovetsky
J. Krupczak
A. Sidi-Yekhlef
J. Pace
C. Collins

A Liquid Helium Cryogenic System Design for the GEM Magnet

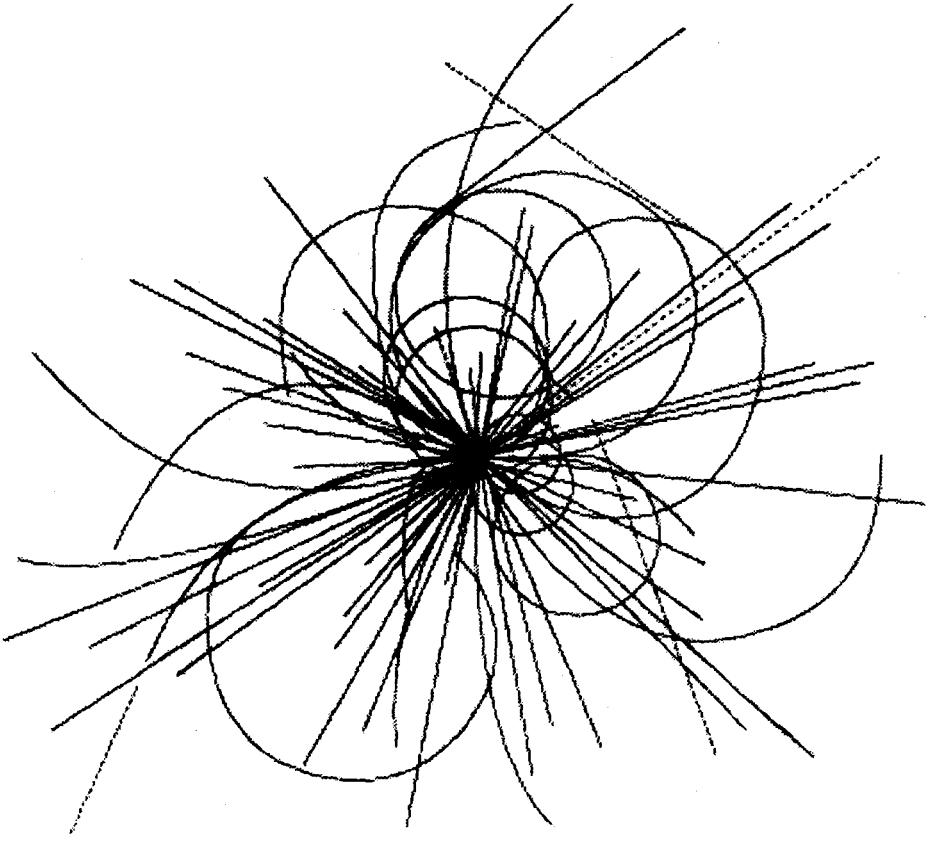

Superconducting Super Collider Laboratory

SSCL-Preprint-449

A Liquid Helium Cryogenic System Design for the GEM Magnet*

G. Deis and R. Warren

Lawrence Livermore National Laboratory
P. O. Box 808
Livermore, CA 94550

D. Richied, N. Martovetsky, J. Krupczak, A. Sidi-Yekhlef,
J. Pace, and C. Collins

Superconducting Super Collider Laboratory†
2550 Beckleymeade Ave.
Dallas, TX 75237

June 1993

*To be submitted at the 1993 Cryogenic Engineering Conference Advances in Cryogenic Engineering, July 12–16, 1993, Albuquerque, N.M.
†Operated by the Universities Research Association, Inc., for the U.S. Department of Energy under Contract No. DE-AC35-89ER40486.

A LIQUID HELIUM CRYOGENIC SYSTEM DESIGN FOR THE GEM MAGNET

G. Deis and R.P. Warren

Lawrence Livermore National Laboratory
P.O. Box 808, Livermore, CA 94550

D.E. Richied, N. N. Martovetsky, J. J. Krupczak, A. Sidi-Yekhlef,
J. R. Pace, and C. A. Collins

Superconducting Super Collider Laboratory*
2550 Beckleymeade Ave.
Dallas, TX 75237-6107

ABSTRACT

The Superconducting Super Collider (SSC) Gammas, Electrons, Muons (GEM) magnet is a large superconducting solenoid with a total mass of 1.05×10^6 kg and a stored energy of 2.5 GJ. A cryogenic system to cool and to maintain the GEM magnet to liquid helium temperature is described. The system is designed to operate effectively under a variety of operating conditions, including cooldown/warm-up, steady state operations, and quench. Primary cooling during steady-state operation is based on natural circulation thermosiphon flow through cooling tubes in the solenoid support bobbin. Additional cooling loops are included for lead and joint cooling and conductor stabilization. A helium refrigerator/liquefier rated at 2 kW and 20 g/s will be specified to meet the refrigeration requirements. Cooldown of the magnet from 300 K to liquid nitrogen temperatures is accomplished using a counterflow helium-to- liquid-nitrogen heat exchanger independent of the helium refrigerator. The system incorporates provisions for maintenance access during accelerator beam operation.

INTRODUCTION

This article describes the cryogenic system designed to supply the superconducting magnet installed in the GEM detector. The GEM detector is one of the major particle detectors planned for use at the Superconducting Super Collider. The GEM magnet, when

* Operated by the Universities Research Association, Inc., for the U.S. Department of Energy under Contract No. DE-AC35-89ER40486.

built, will be the largest superconducting solenoid yet constructed and will have a stored energy of 2.5 GJ. In addition to the large size, the issues faced by the cryogenic system include the transport of liquid helium to the underground location of the magnet 66 m below the surface, and the need for high reliability of operation without maintenance access to the magnet during operation of the collider beam.

MAGNET DESCRIPTION

The GEM magnet is shown in Figure 1. The magnet is a solenoid of NbTi superconducting cable configured in a cable-in-conduit arrangement. The magnet overall dimensions are 20 m in diameter, 30 m in length. The total mass is 1.05×10^6 kg. The planned current of 50.2 kA results in a mean field of 0.8 T. The nominal operating temperature is 4.6 K. The GEM magnet will be located 66 m below the surface in the underground IR-5 experimental hall at the Super Collider. To accommodate the assembly and maintenance of the detector, the magnet is constructed from two half-length coils. Each of these coil halves is constructed from 12 segments of 19 turns each. A cross-sectional view of one segment is seen in Figure 2. The conductor is wound on the inside of the 76-mm-thick and 1171-mm-long cylindrical aluminum bobbin. Normal-conducting joints connect the superconducting cable segments. The magnet contains thermal radiation shields that are cooled with liquid nitrogen. Four currents leads are used, two for each magnet half. Information regarding other details of the magnet design, the conductor characteristics, fabrication, and winding can be found in Barish and Willis[1] and Stroynowski et al. [2]

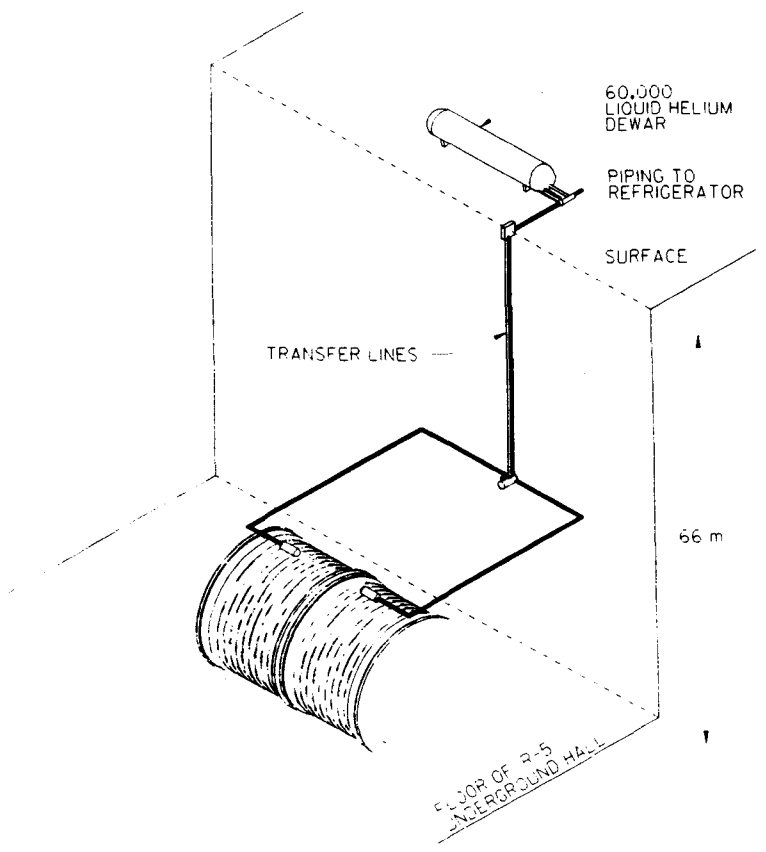

Figure 1. View of GEM magnet showing transfer lines and storage dewar.

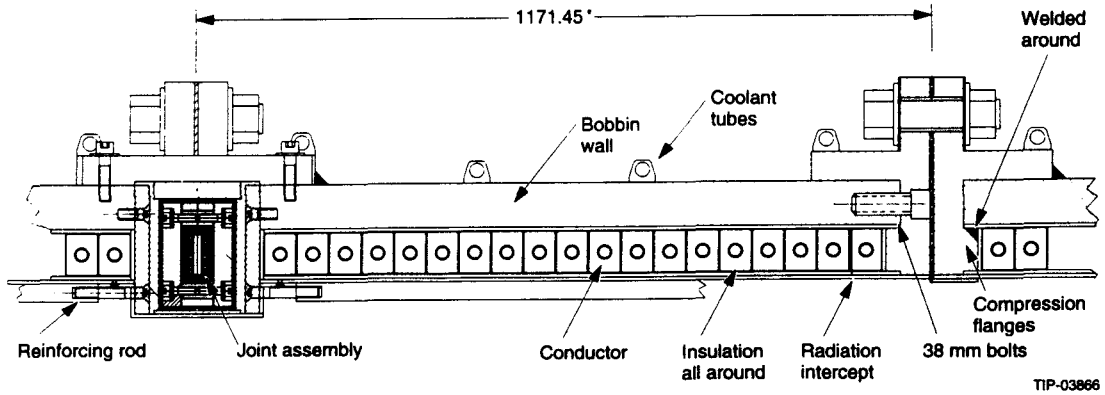

Figure 2. GEM magnet showing transfer lines and storage dewar.

Magnet heat loads arising from either heat transfer from the environment or from eddy current heating are removed by a thermosiphon system in which liquid helium is circulated by natural convection through aluminum heat exchanger tubes welded to the outside of the bobbin. The heat generation within the resistive joints in the conductor between coil segments is removed by a thermosiphon in parallel with the flow through the bobbin heat exchanger. A supercritical helium circuit at the temperature of the thermosiphon is used to provide temperature stabilization to the conductor and to cool the current leads.

LIQUID HELIUM CRYOGENIC SYSTEM REQUIREMENTS

The cryogenic system functions to cool the magnet cold mass from ambient to liquid helium temperature and to maintain this temperature with a very high reliability in the event of equipment or power failure. Additional requirements include the provision of a flow of cold supercritical helium on the order of 0.1 gm/s to the conductor conduit for conductor stabilization and to provide current lead cooling. Refrigeration loads, which we believe are estimated on a conservative basis, are tabulated in Table 1. The magnet thermal radiation heat load is expected to be 0.18 W/m^2, totaling 580 W. The flow requirement to each of the current leads is 0.063 (gm/s)/kA, resulting in a total liquefaction load of 13 gm/s. Normal charging occurs over an 8-h period and results in insignificant eddy current heating. Emergency discharge can occur exponentially with a 100-s time constant and does cause significant eddy current heating. The need to separate the magnet halves for maintenance operations either on the magnets themselves or on other detector components leads to a requirement to maintain one magnet half cold while warming and then recooling the other half.

Table 1. GEM Magnet Refrigeration and Liquefaction Loads.

Loads	Refrigeration	Liquefaction
Thermal Radiation	580 W	
Supports	95 W	
Piping	440 W	
Bayonets	60 W	
Dewar Loss	20 W	
Valves and Misc.	150 W	
Joint Cooling	30 – 300 W	
Current Leads		13 gm/s
Conductor Stabilization	2.4 gm/s	
Total	1435 – 1705 W	13 gm/s

CRYOGENIC SYSTEM DESCRIPTION

The major components of the cryogenic system for the GEM magnet are the 2-kW and 20-gm/s (4-kW equivalent refrigeration) helium refrigerator, a cooldown heat exchanger, a 60,000-L liquid helium supply dewar, and associated transfer lines between the underground magnet and the refrigerator and storage dewar on the surface. Figure 3 is a schematic diagram of the system. In the figure, the two magnet halves are shown separately.

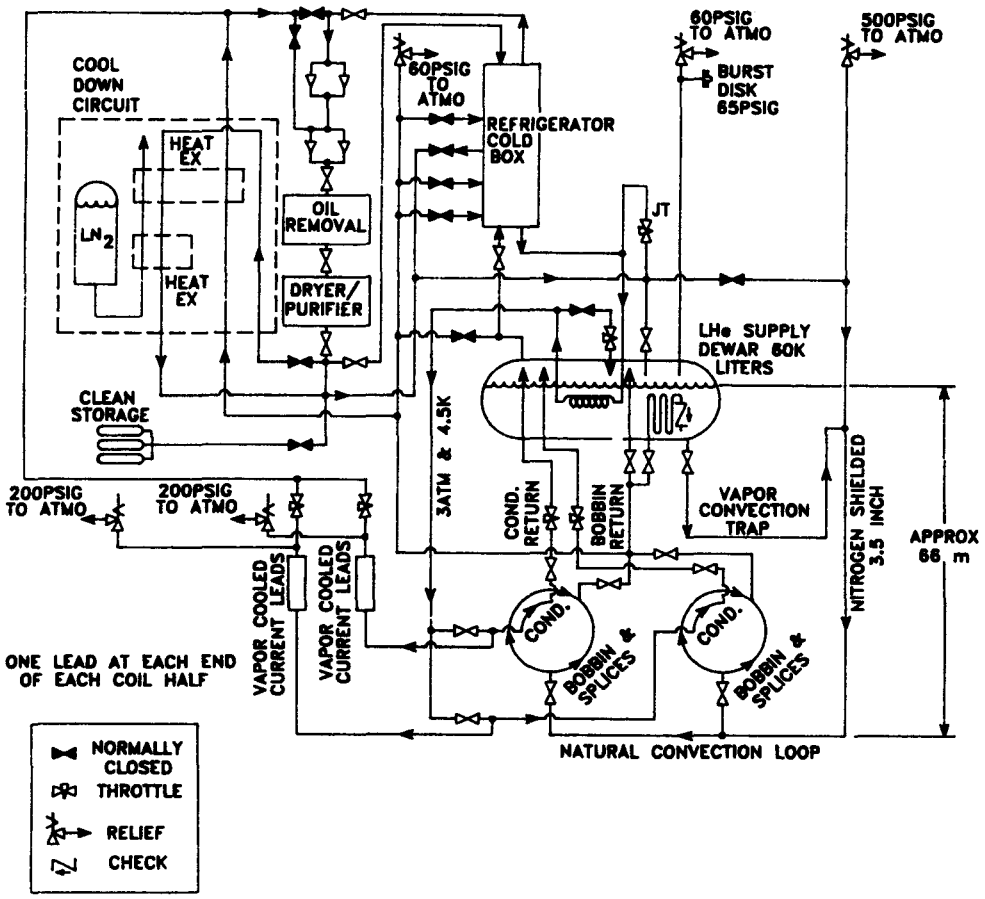

Figure 3. GEM magnet helium system flow schematic.

The primary magnet cooling through the bobbin cooling tubes operates as a natural convection thermosiphon loop. Saturated liquid at 1.3 bar, 4.5 K flows from the 60,000 L storage dewar through a 90-mm liquid-nitrogen-shielded transfer line and then flows upwards through the bobbin heat exchanger. The decrease in liquid density due to the heat input at the bobbin results in a buoyancy difference that causes the liquid helium to flow up through the 100-mm return pipe to the storage dewar. This flow by natural circulation is similar to the system used for the ALEPH magnet. [3] The advantage of natural circulation cooling is that the primary cooling does not rely on any active elements to insure circulation of the liquid helium. An alternative design under consideration uses two 2000-L dewars on each magnet half. In this case, transfer lines from the surface supply LHe to the local dewars. Considerations of cost, reliability, heat load, and transient behavior will determine the final choice of dewar location. In addition to the flow to the bobbin cooling tubes, the thermosiphon circuit is also used to supply flow to the superconductor joints. For the system shown in Figure 3, a flowrate of 650 gm/s is calculated in the thermosiphon loop. Liquid helium leaves the storage dewar in the saturated state at 1.3 bar and 4.5 K. At the bottom of the supply pipe, the liquid is sub-cooled at 4.60 K and 2 bar. At the magnet

exit the expected temperature is 4.74 K at a pressure of 1.8 bar. In the return line to the surface, the liquid helium loses subcooling and becomes two-phase at a distance of 20 m above the magnet. The expected quality of the return flow is 7%.

The thermosiphon system cools only the magnet and the superconducting joints. To provide supercritical helium for conductor stabilization and the current leads, forced flow of supercritical helium from the refrigerator is diverted upstream of the Joule-Thompson valve. This portion of the refrigerator output is passed through a heat exchanger in the storage dewar to cool from 11 K to 4.5 K at 4 bar. A 25-mm nitrogen-shielded transfer line extends from the surface dewar to the magnet. The stabilization flow for each magnet half is controlled independently and throttled back into the storage dewar. The current lead cooling flow is returned to the compressor suction as warm gas.

In the event of a quench, an attempt is made to recover the liquid in the transfer lines forced back by the helium vaporized in the bobbin tubes. There are 3000 L of helium in the supply and return sides of the thermosiphon, and 3100 L in the conductor. On quench detection the supply side of the thermosiphon is closed. After the initial liquid flow, the returning vapor is diverted through a heat exchanger for partial recondensation. About 12 MJ can be absorbed in the dewar without exceeding the critical pressure of helium. The maximum magnet temperature after quench depends on the effectiveness of the quench protection system, which dissipates power in a quench resistor. [1,2] Without protection the maximum magnet temperature will be 50 K. Cooldown from a quench to 50 K will require 5.5 days.

COOLDOWN

The large size of the GEM magnet causes cooldown to be a significant issue. The cooldown of the magnet is carried out in two phases. Cooldown from 300 K to 100 K uses a cooldown heat exchanger independent of the helium refrigerator. Cooldown to 4.5 K uses the main refrigerator system. This design is motivated by the need to achieve a total cooldown time of about one month, and the need for a flexible means of cooling the magnet during initial tests at liquid nitrogen temperatures before the full helium refrigerator is in service.

A dedicated cooldown heat exchanger system was designed to accelerate the cooldown of the magnet from 300 K to 100 K. This system is capable of supplying a flowrate of 600 gm/s of helium gas at 80 K. Typically the first heat exchanger in a helium refrigerator is used for magnet cooldown to nitrogen temperatures. In this case, a heat exchanger optimally sized for a 4-kW refrigerator to supply the needs of steady-state magnet operation would be undersized for the one-month target cooldown time. In addition, planned tests of the magnet at 80 K require cooldown capabilities before the full helium refrigerator is completed. This arrangement provides cooldown schedule flexibility while decreasing total cooldown time by 7 to 10 days.

A complete schematic of the cooldown system is shown in Figure 4. The major components are a vaporizing heat exchanger, a precooling heat exchanger with recovery taps, the refrigerator compressor package consisting of five compressors with a total capacity of 600 - 700 gm/s (four main compressors and one spare), an oil removal system, and a mixing valve. The helium temperature to the magnet is regulated using a bypass line that splits the flow between valves V11 and V21. The mixing valve V4 is controlled using the magnet cold mass and the supply and return stream temperatures. To minimize thermal stresses in the magnet the ΔT across the magnet is constrained to 30 K during cooldown from 300 to 250 K; this ΔT is increased by 20 K for each 50-K decrease in magnet temperature until the minimum supply temperature is reached. The thermosiphon loop piping is used for the cooldown flow. The pressure drop is 2.5 bar at 300 K. The cooldown from 100 K to liquid helium temperature is achieved using the helium refrigerator system. A 4-kW refrigerator similar to that described by Wagner and Keyer [4] is assumed. Such a system is capable of delivering approximately 55 gm/s at 20 K to the magnet relying only on the first two expanders. The capacity of the four expanders is 20 g/sec at 11 K without any help from the return stream in the low-pressure side of the heat

exchangers. The expected cooldown behavior of the magnet is shown in Figure 5. The temperature of the helium cooling gas throughout the cooldown is also included. The abrupt step in the helium gas temperature occurs when the magnet reaches 100 K and flow is switched from the cooldown heat exchanger to the refrigerator. Approximately 18 days are required to reach 100 K; complete cooldown to 4.5 K is expected to take 32 days.

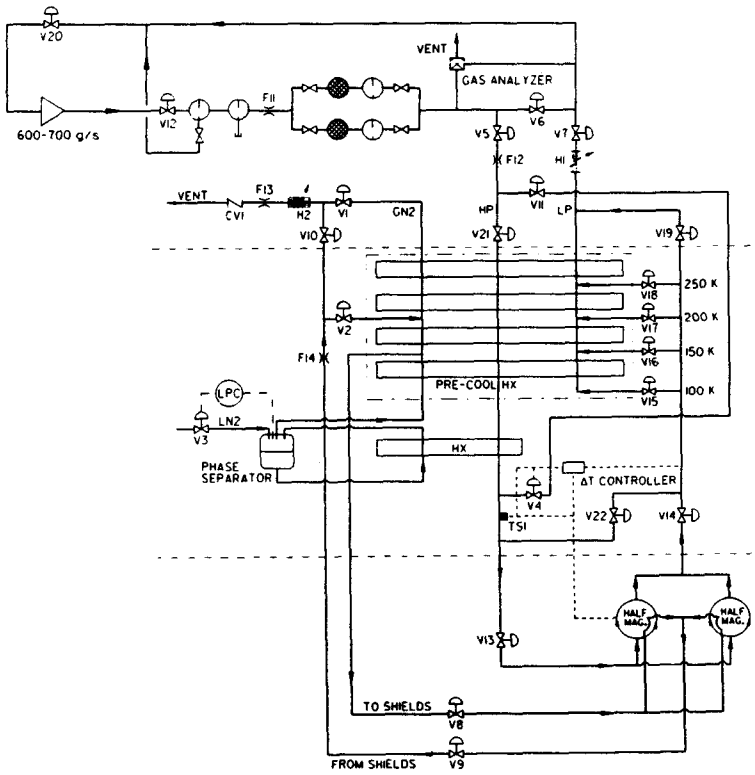

Figure 4. Cooldown system flow schematic.

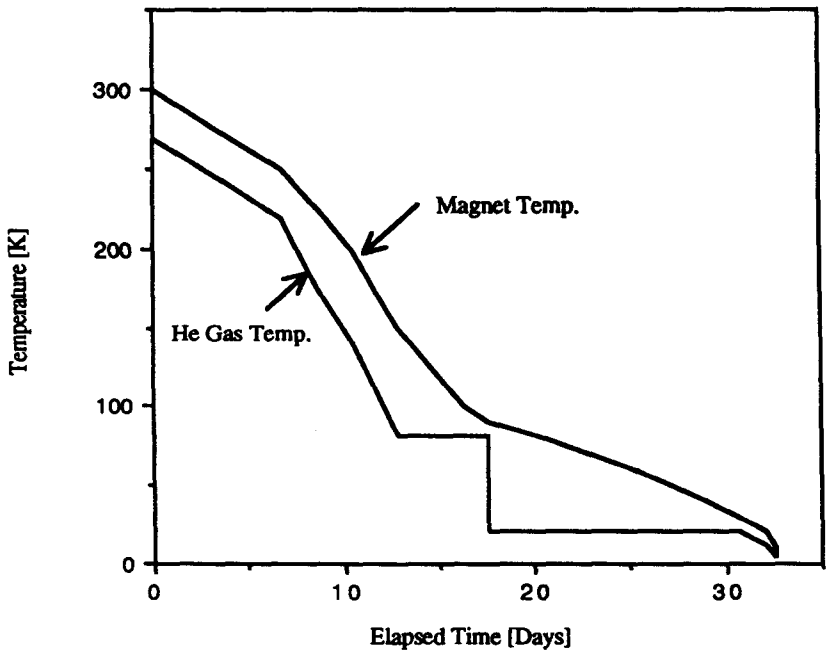

Figure 5. Cooldown curve of the GEM magnet.

RELIABILITY

The system is designed to operate for at least 12 hours during a power failure or an expander failure by using liquid stored in the 60,000-L dewar. Because of the passive nature of the thermosiphon, during a power failure the flow to the thermosiphon continues without interruption. Without power, the supercritical helium flow is achieved by drawing high-pressure helium from compressed gas storage and passing it through the heat exchanger in the storage dewar. An additional option uses the small helium refrigerator used to reliquefy the storage dewar boiloff during extended shutdowns to supply a portion of the supercritical flow. To maximize operational reliability the system is designed so that no automatic valves are located in the experimental hall. Valves are located in the IR-5 utility shaft with provision for emergency access during beam operations.

SUMMARY

The GEM magnet is a NbTi superconducting solenoid 20 m in diameter and 30 m long. It will be located in the SSC IR-5 experimental hall 66 m below the surface. A liquid helium thermosiphon maintains the magnet temperature at about 4.6 K. The expected liquid helium flow rate in the thermosiphon is 650 gm/s, with a temperature increase of 0.2 K across the magnet and a return quality of 0.07. Additional thermal stabilization is provided by a small forced flow of supercritical helium through the cable-in-conduit superconductor. A helium-to-liquid-nitrogen heat exchanger independent of the refrigerator cold box is proposed to achieve a total cooldown time of one month. A 4 kW helium refrigerator will be specified to meet the system refrigeration loads.

ACKNOWLEDGMENTS

The authors would like thank our colleagues in the GEM collaboration and at the Superconducting Super Collider Laboratory for the many contributions made during the course of this work.

REFERENCES

1. B. Barish and W. Willis for the GEM collaboration, "GEM Technical Design Report," GEM-TN-93-262 and SSCL-SR-1219, April 30, 1993.

2. R. Stroynowski et al. "GEM Magnet Engineering Design Report, " GEM-TN-92-116 Rev. A., December 18, 1992.

3. J.C. Lottin and R. Duthil, "Aleph Solenoid Cryogenic System, " ICEC 12, Southampton, July 1988.

4. U. Wagner and W. Keyer, "Process design features of the SSC MTL cryogenic system," Proc. 3rd. International Industrial Symposium on the Super Collider, Plenum Press (1991).