SSCL-Preprint-361

SSCL-Preprint-361
May 1993
Distribution Category: 414

J. Rogers
P. Coleman
G. Schaffer
J. Wallace
X. Wang
Y. Zhao

RF System Analyses for the SSC Collider Rings

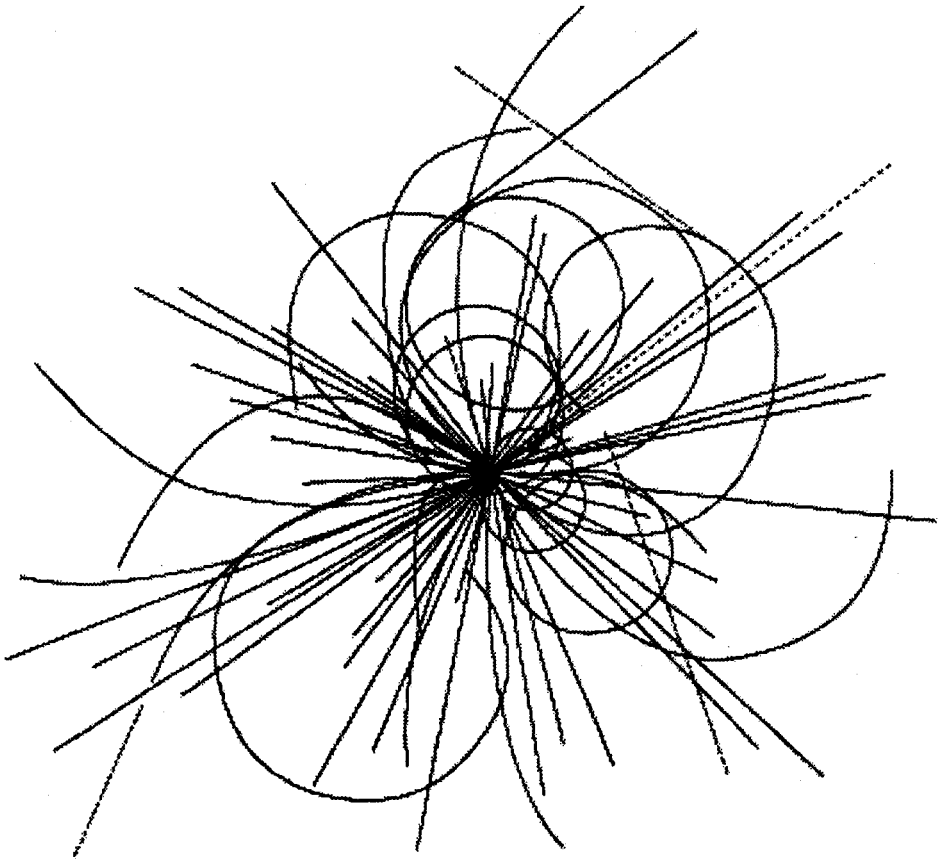

Superconducting Super Collider Laboratory

SSCL-Preprint-361

RF System Analyses for the SSC Collider Rings*

J. Rogers, P. Coleman, G. Schaffer, J. Wallace, X. Wang, and Y. Zhao

Superconducting Super Collider Laboratory†
2550 Beckleymeade Ave.
Dallas, TX 75237

May 1993

*To be presented at the 1993 IEEE Particle Accelerator Conference on May 17–20, Washington, D.C.
†Operated by the Universities Research Association, Inc., for the U.S. Department of Energy under Contract No. DE-AC35-89ER40486.

RF System Analyses for the SSC Collider Rings

J. D. Rogers, P. D. Coleman, G. Schaffer, J. D. Wallace, X. Q. Wang, Y. Zhao
Superconducting Super Collider Laboratory*
2550 Beckleymeade Ave., Dallas, TX 75237

Abstract

The Collider RF system is required to accelerate and store a 70 mA DC proton beam from 2 TeV to 20 TeV. Various approaches have been studied as possible ways to accomplish this task. These include systems based on five-cell normal conducting cavities, single-cell normal conducting cavities, and single-cell superconducting cavities. This paper outlines the physics requirements that the system must meet and presents comparisons of the expected performance of various systems. Transient beam loading, injection error, power requirements, coupled bunch mode instabilities, etc. are considered.

I. INTRODUCTION

The SSC (Superconducting Super Collider) consists of two rings, both having a circumference of 87,120 m. Each ring has its own RF system, which accelerates and stores a 70 mA proton beam from 2 TeV to 20 TeV. The beam injected from the HEB (High Energy Booster) is grouped into 8 batches. The total number of bunches is about 16000 per ring, and there are gaps between batches.

The main requirements for the RF system are two fold. The first is to raise the proton energy. This specifies the main data as follows: frequency 360 MHz, peak RF voltage 20 MV, accelerating voltage per turn 3.6MV, and 0.12 MV to compensate the synchrotron radiation loss at 20 TeV. The second is to ensure the beam quality by removing instabilities and suppressing emittance growth.

The unique characteristics of the Collider are a small revolution frequency (3.44 kHz), large number of bunches and relatively high beam intensity. Our main concern pertinent to the beam quality are coupled bunch instabilities, transient beam loading and injection error. These will be discussed later.

To accomplish the above task, there are three approaches being considered based on different cavities. These are five-cell normal conducting cavities, single cell normal conducting cavities and superconducting cavities [1,2,3]. Table 1 shows their parameters.

This paper is intended to analyze the problem and make a comparison of different approaches with their advantages and disadvantages. Table 2 summarizes the performance of each system. The following sections explain the table entries.

*Operated by the University Research Association Inc., for the U.S. Department of Energy under contract No. DE-AC35-89ER40486

II. TRANSIENT BEAM LOADING

Since an abort gap exists and there are spaces between the batches, and also the ring is only partially filled during the injection period, the beam passing through a cavity is nonuniform. This will cause a modulation of the cavity voltage in both amplitude and phase, known as transient beam loading effect.

The phase modulation is harmful because it may cause the bunches to no longer be exactly equidistant along the ring. The amplitude modulation of the cavity voltage V is less important.

For the simple case when the beam current is constant except at a gap of Δt, which is much less than the cavity filling time, the approximate maximum phase excursion is: [4]

$$\Delta\phi_{max} = \frac{1}{2}\left(\frac{R}{Q}\right)\frac{\omega_{rf}}{V}\bar{I}_B\Delta t$$

where $\bar{I}_B$ is average current at fundamental RF frequency. When the gap is comparable with, or larger than the cavity filling time, it can be shown that the phase excursion $\Delta\phi_{max}$ can be estimated by the following formula:

$$\Delta\phi_{max} = \tan^{-1}\left\{\frac{I_B}{V}\left(\frac{R}{Q}\right)Q_L\left(1-e^{-\sigma\Delta t}\right)\right\}$$

where $\sigma = \omega/2Q_L$ and I_B is the beam current change in question. The worst case occurs during injection when the ring is only partly filled. During storage the maximum excursion occurs at the abort gap, for which Δt=4.2 μs. The data are shown in Table 2 for different scenarios. The superconducting cavity has lower R/Q and higher V compared to the normal copper cavity, implying more stored energy, so it will cause less phase excursion.

In order to minimize the phase error, it is necessary to compensate the transient beam loading by modifying the generator current so that extra current is introduced

Table 1. Cavity parameters

Scenario	NC-5	NC-1	SC
Number of Cavities	8	24	10
Number of Cells per Cavity	5	1	1
R/Q per Cavity	625	140	43
Q_{Loaded}	10^4	10^4	6×10^5

to the cavity with equal amplitude of the transient beam current but opposite phase. To realize this compensation, one can make use of either fast feedback or feedforward [5]. The schematic of these loops are shown in Fig. 1. Feedforward can in principle compensate completely for the beam loading, but in practice, experimental realities limit its effectiveness to ~90% compensation of the transient.[6] Feed-forward may be implemented with a one turn delay which helps reduce the effective impedance presented to the beam at the revolution harmonics.

The effectiveness of fast feedback can be quantified by the ratio of generator induced voltage to beam induced voltage (V_{gen}/V_{beam}). The larger this ratio, the more effective the feedback in reducing the transients. The minimum beam induced voltage achieved using fast feedback is given by[7]

$$V_{beam} \cong I_B N \cdot \frac{R}{Q} \cdot (4 f_{rf} \tau)$$

where N is the number of cavities, and τ is the loop delay.

Transient loading is most critical at injection when the RF voltage is its lowest (6.6 MV). For a klystron gallery located on the surface, the expected loop delay is 1.4 μs. With this delay, it is found that feedback would result in V_{gen}/V_{beam} varying from 5 for a normal conducting multicell system, to 55 for the single cell superconducting approach.[7] The data are shown in Table 2.

In addition to the transient effect discussed above, another consequence of beam loading is its effect on the RF control loops (tuning, phase and amplitude).[8] Usually, with low beam they are stable. When the beam current is comparable with the generator current, the loops may become strongly affected by the beam and coupled to each other. This is a concern for the superconducting cavity, since the generator current is mainly used to compensate for beam loading.

For an adequate stability margin, the beam current should not be larger than the generator current. A ratio V_{gen}/V_{beam} larger than 5 is desirable. From Table 2, all the approaches meet this requirement.

III. INJECTION ERROR

A newly injected batch will cause transient beam loading as noted above, and the injected batch may deviate from the desired position. This injection error may be longitudinal or transverse, or both. The transverse error will result in betatron oscillation and has to be damped by a transverse damper. The longitudinal error will result in synchrotron oscillation. Unlike electron machines, a proton ring has little natural synchrotron damping, thus a dedicated damping loop is necessary to avoid undesired emittance growth. This can be done by a slow feedback loop making use of the main klystron amplifier as a power source. The same scheme is applied to damp the low order coupled bunch instability. We address this later.

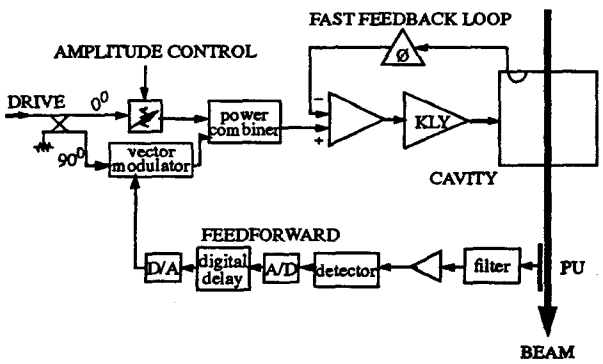

Fig.1 Schematic of feedback and feedforward

IV. RF POWER REQUIREMENT

Since the specified accelerating rate is 3.57 MeV per turn, and the synchrotron radiation loss is only 0.123 MeV per turn, a peak cavity voltage of 20 MV is adequate to meet the bunching requirements. Only 6.6 MV is needed during the injection period for a matched beam transfer.

The generator power P_g must establish the above voltages, and compensate for the beam loading. In the general case, where the cavity is detuned with an angle ϕ_z, P_g can be expressed as follows:[3]

$$P_g = \frac{V^2}{2R_s}\frac{(1+\beta)^2}{4\beta}\left\{\left[-\tan\phi_z + \frac{I_B R_s}{V(1+\beta)}\cos\phi_B\right]^2 + \left[1 + \frac{I_B R_s}{V(1+\beta)}\sin\phi_B\right]^2\right\}$$

where R_s is the unloaded shunt impedance and β is the cavity coupling coefficient. For a superconducting cavity, where both R_s and β tend to become very large, but the load impedance $R_L = R_s/\beta$ remains finite, the above expression is still applicable. One can optimize the coupling (β or R_L) to minimize the power requirement. For the normal conducting cavity, where the beam current is much smaller than the generator current, the major portion of the power is required for establishing the cavity voltage. For a superconducting cavity, power is mainly needed for compensating the beam loading. Table 2 gives the minimum power requirements.

V. COUPLED BUNCH INSTABILITY

Coupled bunch instabilities (CBIs) are seen as a serious potential problem for Collider operation. Due to the large ring circumference, the beam's current spectrum has lines every 3.4 kHz. This very dense spectrum will interact with impedances in the ring, resulting in CBI growth. The most dominant sources of impedance will be the accelerating cavities' fundamental and higher order modes (HOM).

The cavity's fundamental mode (i.e. the accelerating mode) can drive low order CBIs. Due to the small revolution frequency, the cavity bandwidth will typically overlap several revolution sidebands. If the cavity is detuned, it will present different impedances to upper and

lower sidebands, hence resulting in CBI growth. This problem is helped, although not completely eliminated, when using the higher Q superconducting cavities.

Low order CBIs that fall within the accelerating system's bandwidth can be addressed using the system's klystrons and cavities. The fast RF feedback discussed earlier is also helpful in suppressing low order CBIs. The feedback loop reduces the fundamental mode impedance seen by the beam by a factor of G (the open loop gain) and hence reduces growth.

Two approaches will be used to address the CBIs driven by HOMs. These cavity modes will be passively damped (and probably staggered tuned) in order to minimize their contribution to the CBI growth. The remaining growth will then be addressed using an active damper system. Such a system would require a broadband amplifier (30 MHz) driving a wide band kicker structure. The estimated growth times and required active damping voltages for the different scenarios are shown in Table 2.

VI. SUMMARY

Various Collider RF system problems and their potential solutions have been discussed. For proper system operation transient beam loading must be compensated. Fast feedback, feed-forward, or both may be used for this purpose. CBIs and injection errors are also important and can be addressed with fast feedback, passive damping and active damping.

Three different cavity approaches have been investigated. As for the normal conducting systems; the single cell system requires more power, however, it has better CBI performance and less transient beam loading problems. Superconducting single cells are predicted to be better than the other two approaches in power requirements, transient beam loading, and in minimizing CBI growth. However, complexity of the superconducting system is of some concern. Technical layouts of the RF systems are discussed in reference [9].

Table 2. Performance comparison

Scenario	NC 5-cell	NC 1-cell	SC 1-cell
Number of Cavity	8	24	10
Phase Excursion During Injection[1]	46°	35°	22°
Phase Excursion During Storage[2]	7.6°	5.1°	0.8°
V_{gen}/V_{beam}[3]	5	8	55
RF Power Required (MW)	1.65	2.0	0.43
CBI (HOM) Growth Time(sec)	7	19	34
Active Damping Voltage (kV)	7.5	3	1

1. Estimated maximum, due to transient beam loading at injection without feed-back.
2. With an abort gap of 4.2 μs without feed-back.
3. With feedback applied.

VII. ACKNOWLEDGEMENTS

We would like to thank D. Boussard (CERN), P. Morton (SLAC), and Tai-Sen Wang (LANL), who have contributed a great deal to our analyses.

VIII. REFERENCES

[1] J. D. Jackson, ed., "Conceptual Design of the Superconducting Super Collider (CDR)," SSC Report SSC-SR-2020 March 1986.
[2] W. Chou, G.Schaffer, "Comments on the Collider RF cavity in the SSC," Internal memo in SSCL, 1992
[3] X. Wang, P.Coleman, G.Schaffer, "A comparison of conceptual RF designs for the SSC collider," SSCL-613, Dec.1992.
[4] D. Boussard, "RF power requirement for a high intensity proton collider," (part 1& 2), CERN SL/91-16, (RFS),April 1991
[5] A. Gamp, "Servo control of RF cavities under beam-loading," DESY HERA-91-09, May, 1991.
[6] J. Griffin, "Compensation for beam loading in the 400-GeV Fermilab main accelerator," *IEEE Trans. on Nuc.Sci.*, Vol. NS-22, No. 3, June 1975, p.1910
[7] D.Coleman, SSCL Internal presentation, Jan.1993.
[8] F. Pederson, "Beam loading effects in the CERN PS Booster," *IEEE Trans. Nucl. Sci.*, Vol. NS-22, No. 3, June 1975.
[9] G.Schaffer et.al. "RF systems engineering for the SSC collider rings," this conference