SSCL-Preprint-340

Electrical Performance Characteristics of the SSC Accelerator System String Test

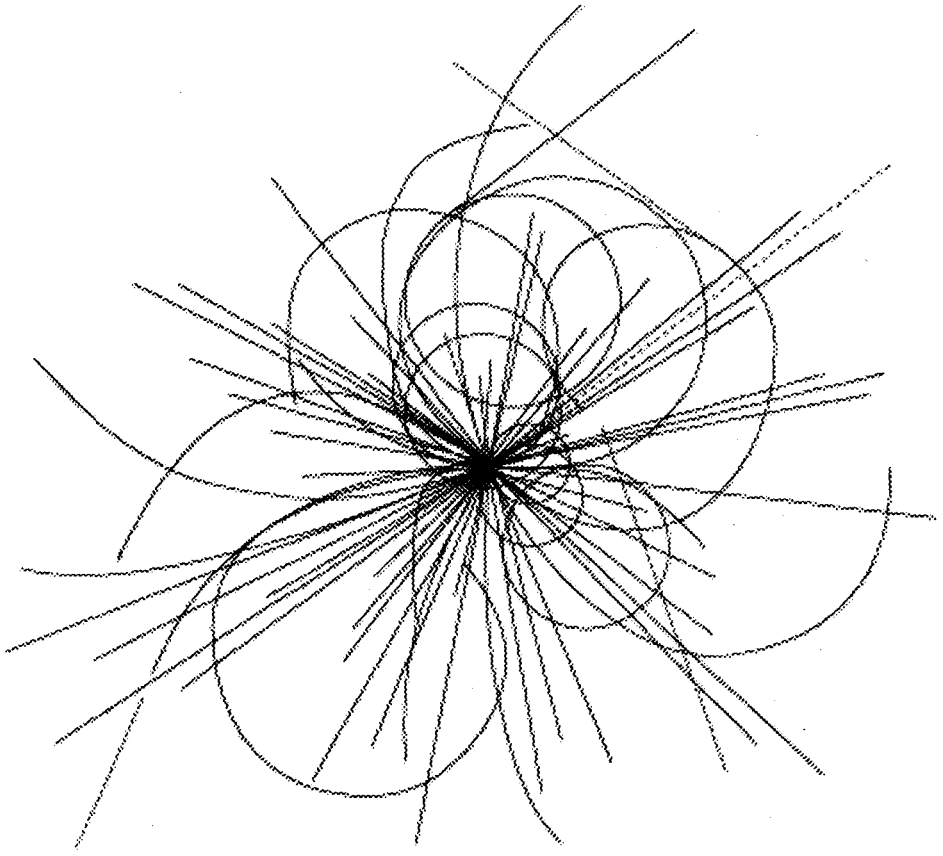

Superconducting Super Collider Laboratory

SSCL-Preprint-340
May 1993
Distribution Category: 400

W. Robinson
W. Burgett
J. Gannon
P. Kraushaar
A. Mcinturff
R. Nehring
V. Saladin
T. Savord
G. Sorrensen
R. Smellie
G. Tool
D. Voy

To be published in *Supercollider 5*

SSCL-Preprint-340

Electrical Performance Characteristics of the SSC Accelerator System String Test*

W. Robinson, W. Burgett, J. Gannon,
P. Kraushaar, and A. Mcinturff, R. Nehring,
V. Saladin, T. Savord, G. Sorrensen, R. Smellie,
G. Tool, and D. Voy

Superconducting Super Collider Laboratory†
2550 Beckleymeade Ave.
Dallas, TX 75237

May 1993

*Presented at the Fifth Annual International Symposium on the Super Collider, May 6–8, 1993 San Francisco, CA.
†Operated by the Universities Research Association, Inc., for the U.S. Department of Energy under Contract No. DE-AC35-89ER40486.

ELECTRICAL PERFORMANCE CHARACTERISTICS OF THE SSC ACCELERATOR SYSTEM STRING TEST

W. Robinson,[1] W. Burgett,[1] J. Gannon,[2] P. Kraushaar, [1]
A. Mcinturff,[1] R. Nehring,[2] V. Saladin,[1] T. Savord,[2]
G. Sorrensen,[2] R. Smellie,[2] G. Tool,[2] And D. Voy[2]

[1]Project Management Office
[2]Electrical Engineering Department
Superconducting Super Collider*
2550 Beckleymeade Avenue
Dallas, Texas 75237

INTRODUCTION

The intent of the Accelerator System String Test (ASST) is to obtain data for model verification and information on the magnitudes of pressures and voltages encountered in an accelerator environment. The ASST milestone run was achieved during July and August, 1992 and consisted of demonstrating the accelerator components could be configured together as a system operating at full current.[1] Following the milestone run, the string was warmed to counteract some design flaws that impeded the operational range. The string was again cooled to cryogenic temperatures in October, and a comprehensive power testing program was conducted through the end of January, 1993. This paper describes how the collider arc components operate in an accelerator environment during quenches induced by firing both strip heaters and spot heaters. Evaluation of the data illustrates how variations in the design parameters on magnets used in a string environment can impact system performance.

CONFIGURATION

The ASST is composed of five 50 mm aperture dipole magnets, a 40 mm aperture quadrupole magnet, a corrector spool, and feed and end spools. The dipole magnets used in the string were industrial prototypes constructed by General Dynamics personnel utilizing facilities at Fermi Lab. Those magnets included DCA313, DCA314, DCA319, DCA315, and DCA316. The quadrupole magnet was built at LBL. The three spool pieces were built to SSCL specification by Meyer Tool, Cryenco, and Consolidated Vacuum Industries. A DC current power supply was used to provide a maximum current of 6500 amps. An energy dump was used with the string to evaluate the energy extraction system.

Each dipole magnet consists of four superconducting coils. The differential voltage across each coil is monitored by the quench protection monitor system and a data acquisition system. There are four strip heaters for each magnet that are positioned along the length of the outer coils in a quadrant configuration. The strip heaters in opposing quadrants are electrically connected together in parallel. Each set of strip heaters is independently controlled by a heater firing unit. This configuration protects the magnet by providing a

level of redundancy that ensures the outer coils quench despite a failure that may occur in one of the heater firing units.

Figure 1 illustrates the equivalent electrical circuit of the string. During a quench, the resistive voltage developed by the quenching component causes the bypass diodes to conduct. This allows energy stored in other parts of the string to bypass the quenching region while the energy is extracted from the non quenching portion of the system through the energy dump. Note that the SPR is located between DCA316 and the quadrupole. It was determined that the quadrupole would not withstand the resultant heating that would occur under quenching conditions with two dipoles connected in series with it. In order to protect the quadrupole, an additional bypass diode was added to the system. Also note that only one of the bypass leads is connected. The second bypass lead is only required to support a full cell so it was not necessary to risk using the second bypass lead during initial operation. Both bypass leads were later tested well beyond specification.

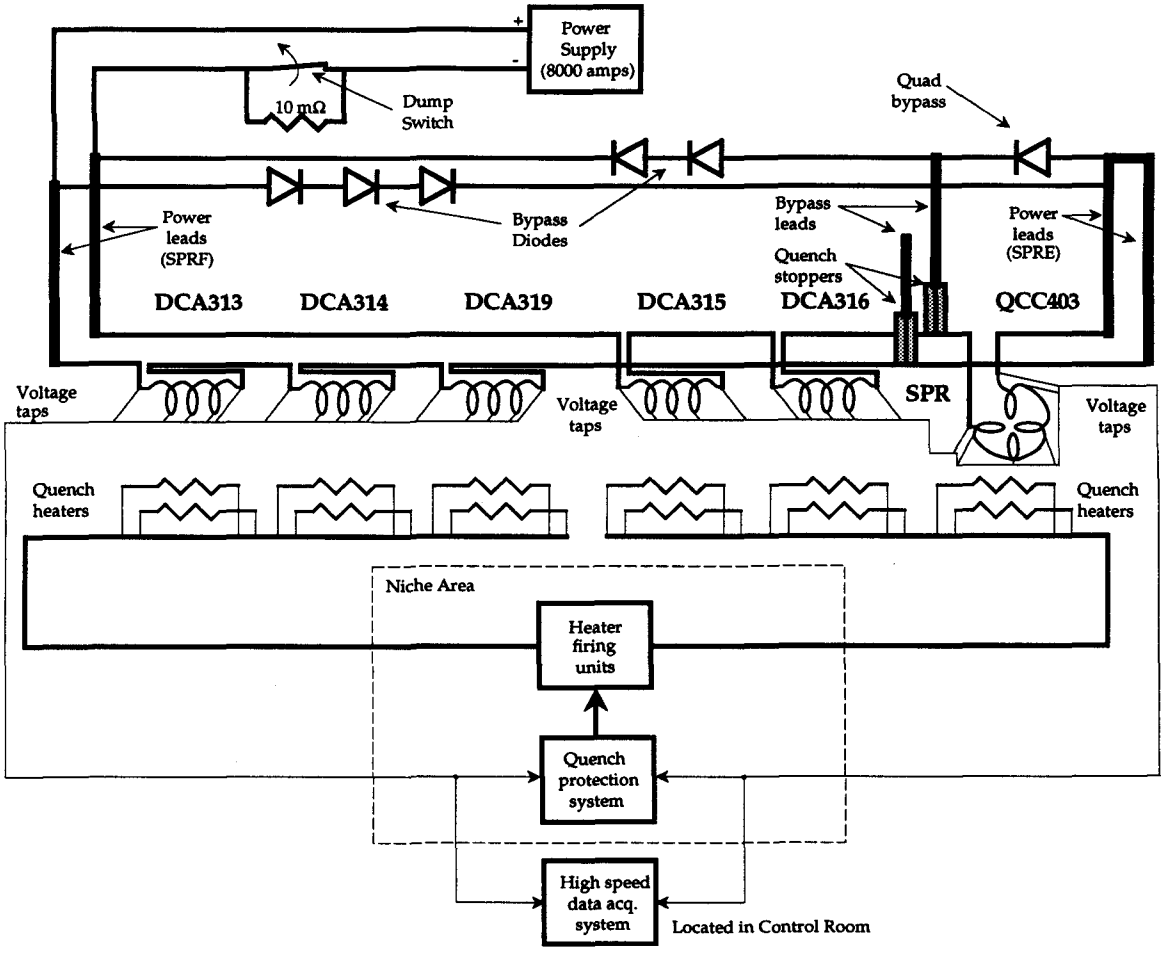

Figure 1. Electrical configuration of the ASST.

QUENCH ANALYSIS

During the initial run, the string was operated at T = 4.65 K partly because of the limitations of the cryogenics plant, and also to keep the amount of operating margin small. One of the unexpected results from testing was the effect differences in residual resistivity ratio (RRR, which is defined as the 300 K resistance divided by the 10 K resistance) between magnets had on the system quench response. Problems were encountered during string testing from using magnets with different RRRs in the same circuit. Table 1 outlines the RRR characteristics of the dipole magnets used in the string. From Figure 1, DCA313, DCA314, and DCA319 are grouped together electrically, and DCA315 and DCA316 are wired together. Some magnets in the circuit were able to dissipate the stored energy at a high rate while other magnets transferred much of their stored energy to the magnets with lower RRR. Figure 2 illustrates the MIITs and peak voltage to ground that was attained

during strip heater induced quenches on DCA319. The test was terminated at 6000 amps because the voltage was projected to reach 2300 volts at 6500 amps.
As the MIITs integral demonstrates, RRR has an important role in determining the response of the system. The MIITs is determined by:

$$\text{MIITs} = 10^{-6} \int_0^{\infty} i^2(t)\, dt = 10^{-6} A^2 d \int_{T_o}^{T} \frac{C(T)}{\rho(T,RRR,B)}\, dT\,, \tag{1}$$

where i is the current, A is the cross-sectional area, d is the density, C is the heat capacity of the conductor, B is the magnetic field term for the magneto-resistance, and ρ is the electrical copper resistivity. An approximation for ρ is:

$$\rho(T,RRR) = \frac{1.545}{RRR} + \left(\frac{2.32547 \times 10^9}{T} + \frac{9.57137 \times 10^5}{T} + \frac{.62735 \times 10^{-2}}{T}\right)^{-1} \mu\Omega\text{-}cm. \tag{2}$$

The parenthesis on the right is an approximation to the Grüneisen integral formula for the phonon scattering resistivity.[2] As the RRR of the material is uniformly reduced, the copper resistivity is increased, and MIITs are reduced because the effective time constant of the system is reduced. Stored energy in the magnets is dissipated more rapidly when the RRR of the material is lowered. Since resistivity is increased, peak voltage attained during quench is also increased. In a string environment, quenching magnets with lower RRR experienced higher MIITs, voltages, and temperatures than expected due to additional energy dissipated in those magnets provided by magnets in the system with higher RRR.

Table 1. UI is the upper inner coil, UO is the upper outer coil, LO is the lower outer coil, and LI is the lower inner coil.

RRR VALUES of ASST MAGNETS

Magnet	UI RRR	UO RRR	LO RRR	LI RRR
DCA313	170	174	171	173
DCA314	174	177	174	171
DCA319	105	96	97	108
DCA315	162	173	174	177
DCA316	67	109	109	78

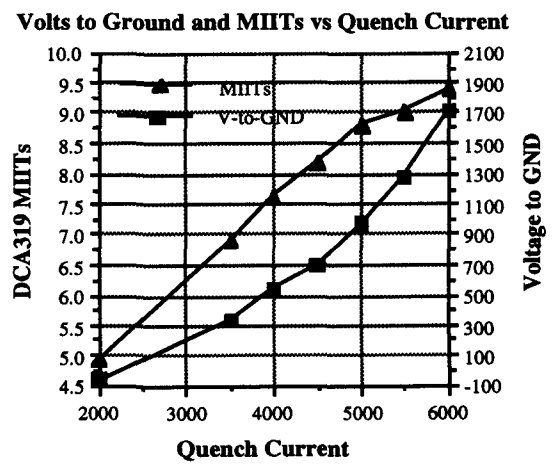

Figure 2. MIITs and voltage to ground as a function current when initiating a string quench by firing the strip heater in DCA319 (t = 4.65 K).

Energy deposition estimates were made using the coil voltage $V_c(t)$, which is a combination of the inductive voltage that results from change in current in a coil of inductance L_c, and a resistive voltage resulting from current passing through the copper in the superconductor wire. The developed coil resistance $R_c(t)$ is given by:

$$R_c(t) = \frac{\left[V_c(t) - L_c \frac{di}{dt}\right]}{i(t)}\,, \tag{3}$$

where di/dt is calculated from the current decay of i(t). Given the resistance of each coil, an estimate is made on how the energy is being dissipated in the string.

The total energy stored in the string is given by $W_L = \frac{1}{2} L\, i_o^2$, where L is the string inductance (approximately 75 mH/dipole and 7.5 mH/quadrupole), and i_o is the string current before a quench occurs. For i_o = 6500 amps, the energy storage in the string is $W_L \approx$ 8 MJoules. The energy deposition for each coil is determined by:

$$W_{R_C} = \int_{t_o}^{\infty} R_C(t)\, i^2(t)\, dt, \tag{4}$$

where t_o represents when resistance in the coil is detected.

Figure 3 shows how the string energy is dissipated in the string during Event #285 when all strip heaters were fired simultaneously. DCA319 dissipated the most energy because it had the lowest RRR of the three dipoles in its circuit. Although the RRR of DCA316 is similar to DCA319, there was only one other dipole in the DCA316 circuit. The total energy dissipated by Event 285 was 7.79 MJoules. The 3.68% difference from the expected energy of 8.08 MJoules is due to the change in the dipole inductance from the high field iron core saturation.

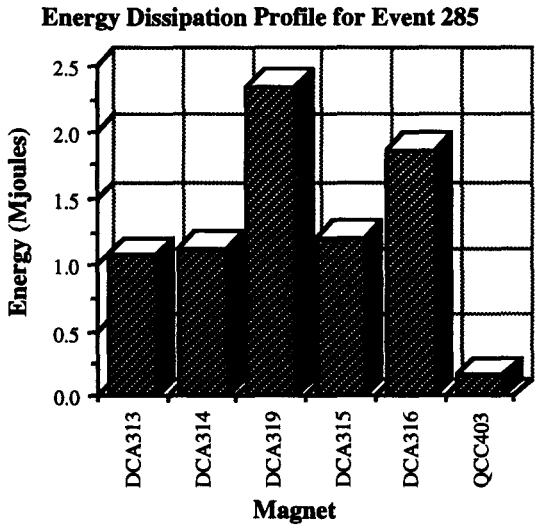

Figure 3. Profile of energy dissipation for Event 285 where all strip heaters were fired simultaneously. Peak current for this event was 6475 amps.

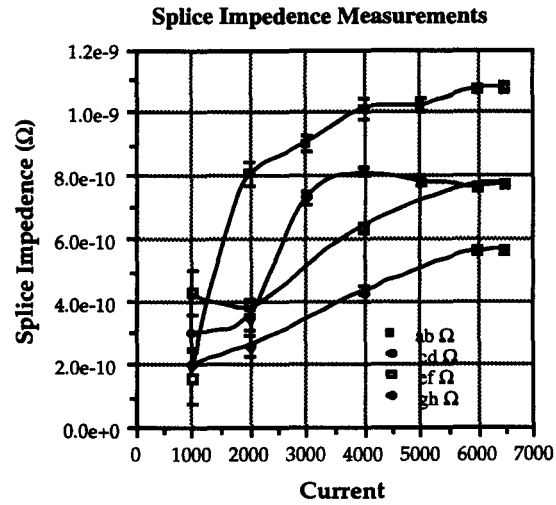

Figure 4. Splice joint impedance as a function of current. The "hump" in the gh Ω curve is probably due to measurement error.

Splice Joint Resistance

Voltage taps were placed on each side of four splice joints in the string. The voltages across the joints were monitored while ramping the string to full current. Figure 4 illustrates the splice joint resistances from 2000 amps to the full current of 6500 amps. These were also the first joints fabricated in the field so it is expected that the impedance will become lower as our processes continue to improve and experience is gained in joint fabrication. The change in resistance as a function of current is due to the superconducting properties of solder at low currents. The differences between splice impedance at high current is probably due to differences in the solder composition or thickness between joints.

FULL CELL RUN

We are currently reconfiguring the string as a full cell that is scheduled for cool down sometime in June. We have grouped magnets together based on RRR into four families. We expect the energy dissipation of the system to become more balanced as each RRR family is configured together through one bypass circuit. We plan to continue monitoring splice joint resistance and collect data at a lower operating temperature.

---

* Operated by the Universities Research Association, Inc., for the U. S. Department of Energy under Contract No. DE-AC35-89ER40486.

[1]Burgett, et al., "Full-Power Test of a String of Magnets Comprising a Half-Cell of the Superconducting Super Collider," SSCL-Preprint-162, October, 1992. (To be published in the journal *Particle Accelerators.*)

[2]M. McAshan, "MIITS Integrals for Copper and for Nb - 46.5 wt% Ti," SSC-N-468, February, 1988.