SSCL-Preprint-331

SSCL-Preprint-331
May 1993
Distribution Category: 414

B. Kountanis
L. Kalny

Development of Hermetic Electrical Connectors for SSC Spool Pieces

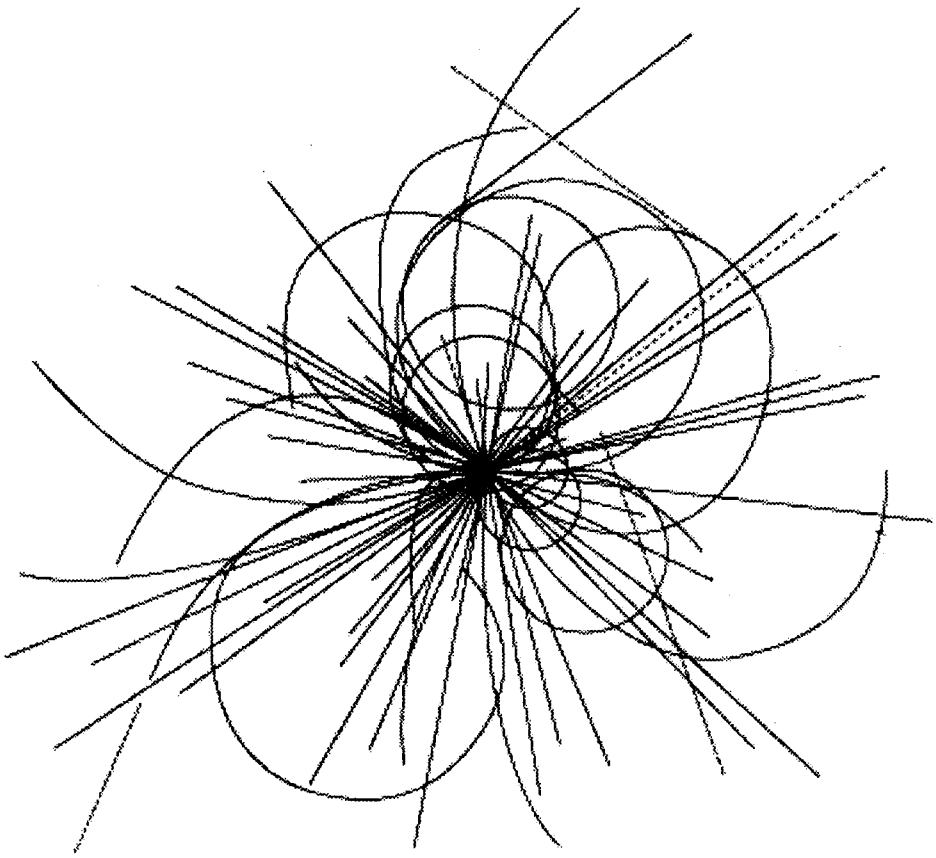

Superconducting Super Collider Laboratory

To be published in *Supercollider 5* SSCL-Preprint-331

Development of Hermetic Electrical Connectors for SSC Spool Pieces*

B. Kountanis and L. Kalny

Superconducting Super Collider Laboratory†
2550 Beckleymeade Ave.
Dallas, TX 75237

May 1993

*Presented at the Fifth Annual International Symposium on the Super Collider, May 6–8, 1993 San Francisco, CA.
†Operated by the Universities Research Association, Inc., for the U.S. Department of Energy under Contract No. DE-AC35-89ER40486.

DEVELOPMENT OF HERMETIC ELECTRICAL CONNECTORS FOR SSC SPOOL PIECES

Bill Kountanis[1] and Lou Kalny[2]

[1]Superconducting Super Collider Laboratory*
2550 Beckleymeade Ave.
Dallas, TX 75237-3997

[2]Hi-Rel Connectors, Inc.
760 W. Wharton Drive
Claremont, CA 91711

INTRODUCTION

The Superconducting Super Collider ring is about 54 miles (87 km circumference) and primarily includes a series of magnets. Spool piece assemblies are interspaced in the ring at predetermined intervals to provide specific functions such as cryogenic interfaces, vacuum interface, magnet power, magnet power dump, quench heater power, and special instrumentation. Electrical connectors serve as interfaces for instrumentation and quench heater circuits. These connectors have to meet stringent requirements.

REQUIREMENTS

There are three levels of electrical requirements which are determined by application. These are low voltage instrumentation, voltage taps, and heater circuits. In addition to the electrical requirements, all connectors have to meet unique mechanical and environmental requirements. Common requirements are:

Pressure:	2.5 MPa (375 PSIG)
Vacuum Leak Rate:	2×10^{-10} PaM^3/sec. (2×10^{-9} Std cm^3/sec)
Temperature:	–65°C to +200°C
Thermal Shock:	–260°C to 260°C
Radiation:	1×10^7 RAD Proton over 25 years

Connectors which are used for low level signals such as temperature sensors, pressure transducers, and accelerometers are required to meet 2000-volt dc high potential with less than 1 micro amp leakage in air before being installed. Connectors for use with voltage taps

* Operated by the Universities Research Association, Inc., for the U. S. Department of Energy under Contract No. DE-AC35-89ER40486.

and heaters are required to meet 5000-Vdc high potential with less than one micro amp leakage in air before being installed. After installation, connectors for voltage taps and heaters must meet 3000-Vdc high potential with less than 1 micro amp leakage in helium at 1 atmosphere pressure. Low voltage connectors are not high potted after installation.

DESIGN CONSTRAINTS

Connectors are mounted on the outside of the spool piece as shown on Figure 1 and must be accessible from the aisle side of the spool piece. (The side which is away from the tunnel wall.) Installation must be done from the outside of the spool so that replacement or repair can be easily accomplished. Additionally, a standard mounting pattern would make spool fabrication uniform from a production perspective.

DESIGN SOLUTIONS

In order to meet the pressure and vacuum requirements, a hermetically sealed design is used. The seal has to meet the high potential requirements as well as those of temperature and radiation. The type of seal that met these requirements is the vitreous type which utilized a multi-hole glass preform. Individual seals around each pin did not meet the high pot requirement.

The next obstacle is the high potential requirements in a helium atmosphere. This is accomplished by potting the back side of the receptacle, after the wires are connected, with a suitable epoxy which has to be vacuum degassed to remove air bubbles during encapsulation. A built-in potting ring is used to support the potting process.

Standard box mount receptacles offered the capability of being installed from the outside but could not be adequately sealed for pressure and vacuum. A special flange mount is used with an "o" ring seal. The flange size and hole pattern are the same for all insert arrangements so that any receptacle can be used. Figure 2 shows a typical receptacle.

Shell sizes and insert arrangements correspond to MIL-C-38999 Series III requirements. Any counterpart Series III plug can be used as a mating connector. However, some types of plugs may not meet some of the high potential and environmental requirements. Selection of the plugs must consider the type of material used for contact insulation and the shell materials. Shells for the collider plugs are 300 series stainless steel with a socket insulator material selected to meet the specific performance requirements.

TESTING

Testing, in addition to qualification tests for MIL-C 38999, has included a series of high potential tests. These tests were performed with a high potential tester which limits the breakdown current to 50 micro-amps. The higher voltage type receptacles were subjected to 5000 Vdc in air with less than 1 micro-amp leakage current. All receptacles tested passed this test. The low voltage receptacles were subjected to 2000 Vdc in air with less than 1 micro-amp leakage current and also passed. A limited number of tests using helium atmospheric conditions have been conducted and all receptacles have passed the above required potential values. Additional tests are presently being performed which will include all of the required insert arrangements. A limited number of thermal shock tests have been performed with no failures to date. Hermeticity remains less than 1×10^{-9} Std cm^3/sec.

RELATED DESIGNS

The experience and technology obtained from the development of these receptacles is being extended to developing feedthroughs for superconducting leads. There are two types

of superconducting leads; the main magnet bus which is keystone shaped, and the corrector element leads which are round. Both feedthroughs will be in liquid helium.

CONCLUSION

Testing to date has shown that these connectors meet the mechanical and electrical requirements for use in the spool pieces. The only remaining environmental requirement to be accomplished for the collider final design is the selection of an "o" ring material which will have a useful life of 25 years.

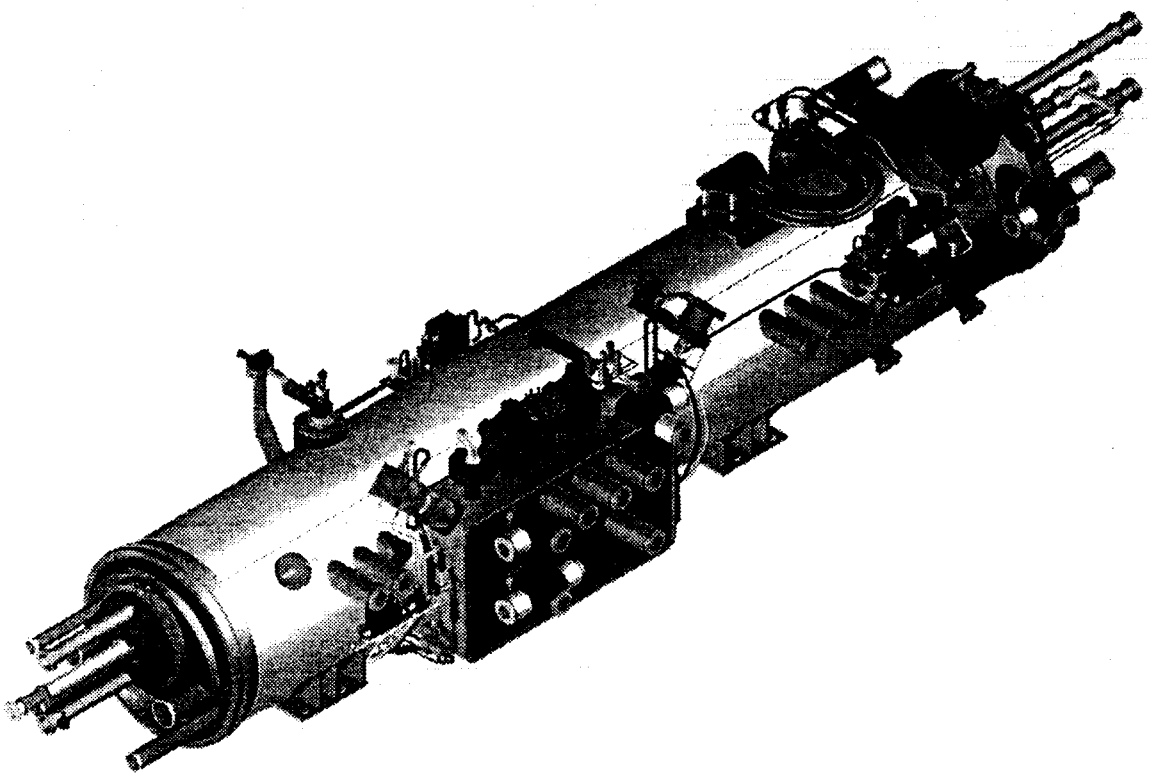

Figure 1. Spool Piece Showing Connectors Installed

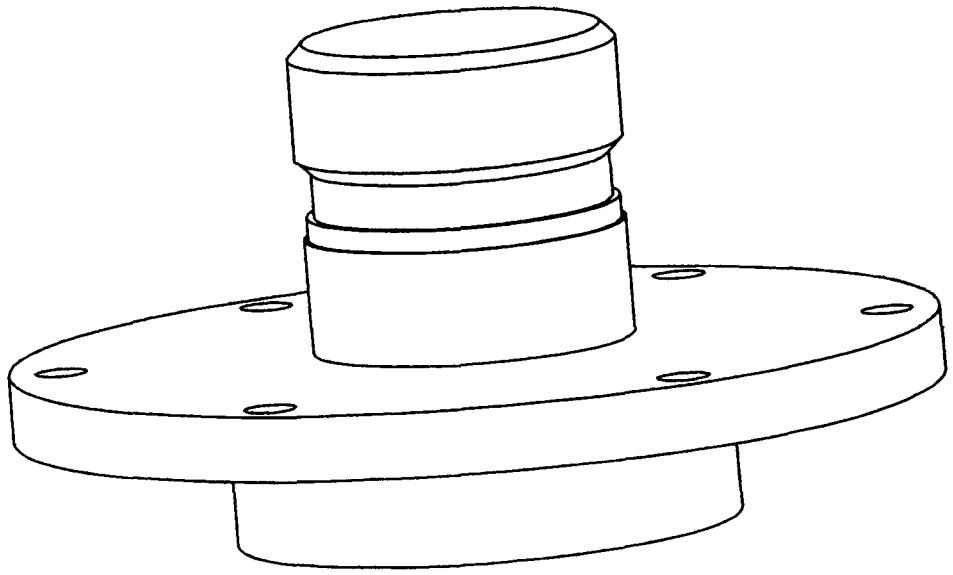

Figure 2. Typical Connector Outline