SSCL-Preprint-309

SSCL-Preprint-309
April 1993
Distribution Category: 400

B. Dao

Structural Behavior of the Six-Strut Support System

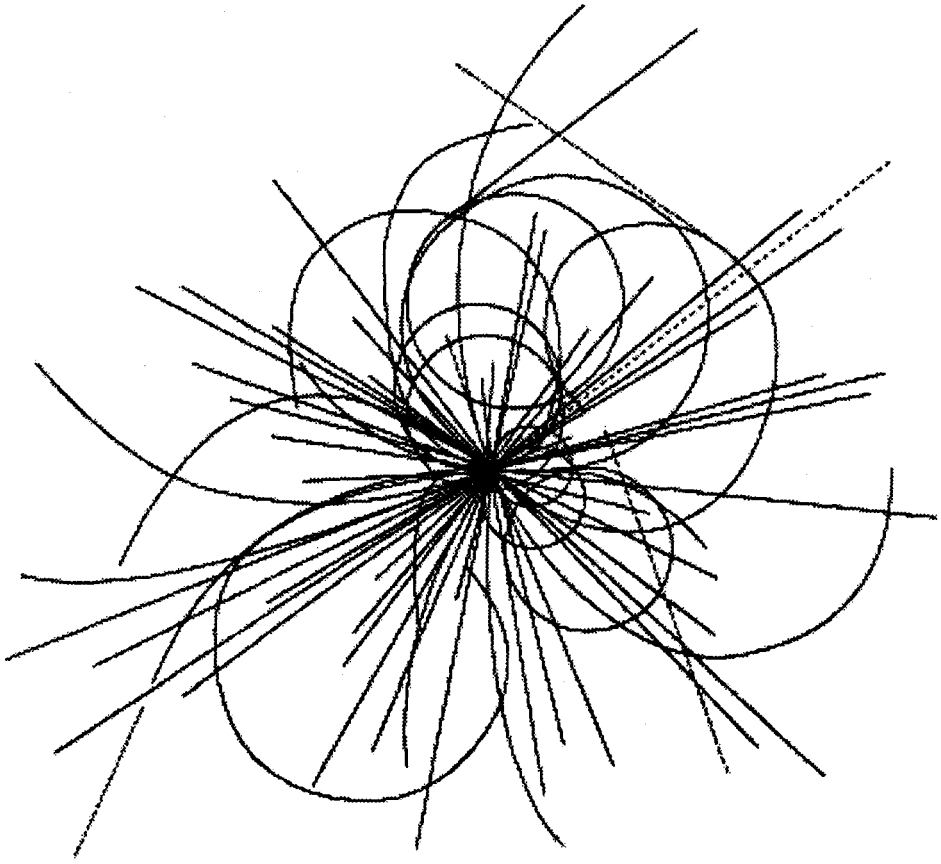

Superconducting Super Collider Laboratory

To be published in *Supercollider 5* SSCL-Preprint-309

Structural Behavior of the Six-Strut Support System*

B. Dao

Superconducting Super Collider Laboratory†
2550 Beckleymeade Ave.
Dallas, TX 75237

April 1993

*Presented at the Fifth Annual International Symposium on the Super Collider, May 6–8, 1993 San Francisco, CA.
†Operated by the Universities Research Association, Inc., for the U.S. Department of Energy under Contract No. DE-AC35-89ER40486.

STRUCTURAL BEHAVIOR OF THE SIX-STRUT SUPPORT SYSTEM

Bui Dao

Mechanical Engineering Department
Accelerator Systems Division
Superconducting Super Collider Laboratory*
2550 Beckleymeade Avenue, MS 4006
Dallas, TX 75237-3997

ABSTRACT

A simple mathematical model was used to understand the structural behavior of the six-strut support system. By breaking the system into symmetry and antisymmetry configurations, the vertical and torsional displacements were decoupled, thus making simple calculations possible.

INTRODUCTION

As its name implies, the six-strut system supports the accelerator component with six struts arranged in various ways. The arrangement considered in this paper has three vertical, two transverse, and one axial strut as graphically shown in Figure 1. This support system will be used to support many components for the Superconducting Super Collider. Figure 2 shows a photograph of the SSC Linear Accelerator (LINAC) Radio Frequency Quadrupole (RFQ) utilizing this support system. By using differential threads on both ends, the six-strut system increases movement resolution, ease of installation, and alignment efforts. It is of interest to determine the effect of the support system on the deformation of the components.

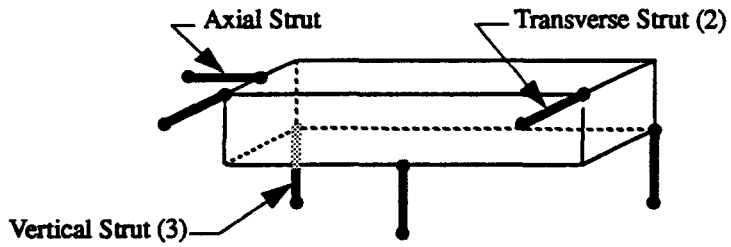

Figure 1. Six-Strut Support Arrangement with 3 Verticals.

---

* Operated by the Universities Research Association, Inc., for the U.S. Department of Energy under Contract No. DE-AC35-89ER40486.

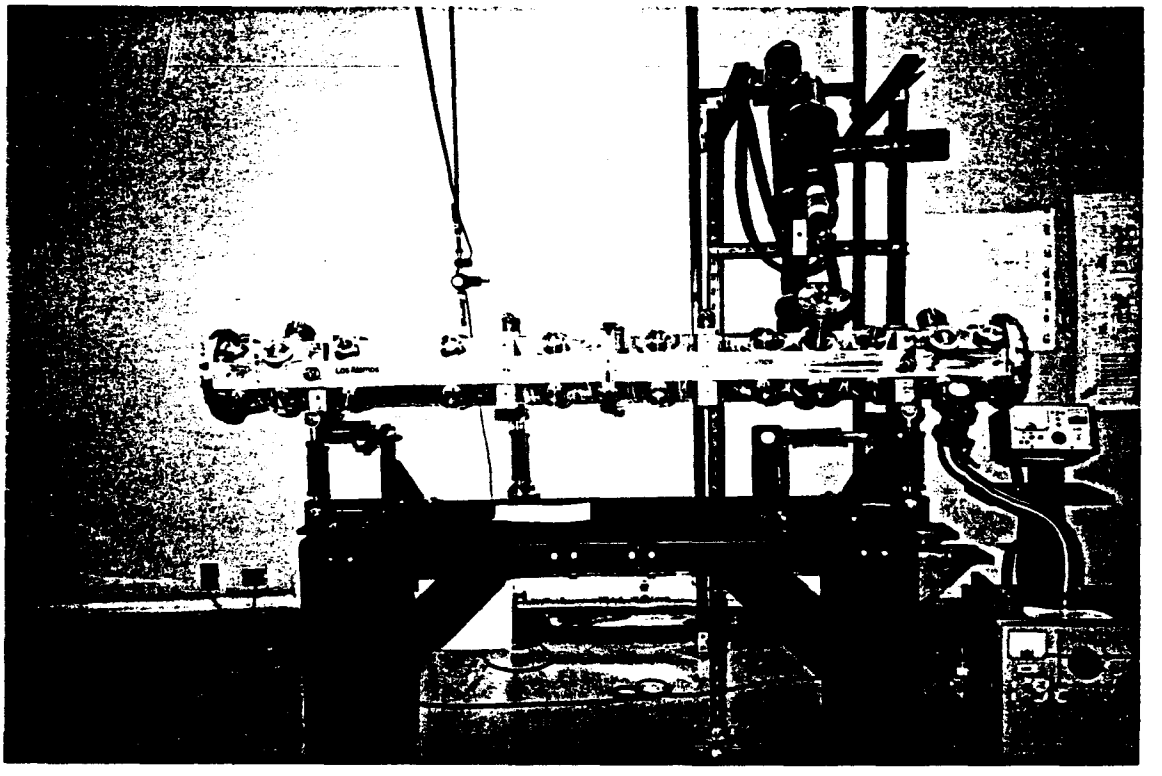

Figure 2. The SSC LINAC RFQ with Six-Strut Support System.

STRUCTURAL BEHAVIOR

The six-strut system puts the minimum constraint on the component. The system is structurally determinate. Because of the bearing mounts, the struts only resist axial loads. The reactions of the six struts can be computed using the static equations:

$$\Sigma F = 0 \quad \text{for } x, y, z$$

$$\Sigma M = 0 \quad \text{for } x, y, z$$

Any solution of the displacements will be a combination of elastic deformation and rigid body displacements. The latter one is due to and depends upon the boundary conditions applied at the support end of the struts. Because the structure is determinate, from the small displacement point of view, rigid body displacement is not a primary concern. It does not generate any additional stresses nor affect the deformed shape. This is not completely true if large displacements are imposed. Geometric effects will take place. In the normal case, only the deformed shape due to gravity is of interest. The transverse and axial struts provide the movements for alignment but they do not participate in resisting the gravity loads. The primary deformed shape can be understood by decomposing the problem into symmetry and an antisymmetry components as shown in Figure 3. The former provides a solution for the vertical deformation. The latter provides a solution for the torsional deformation.

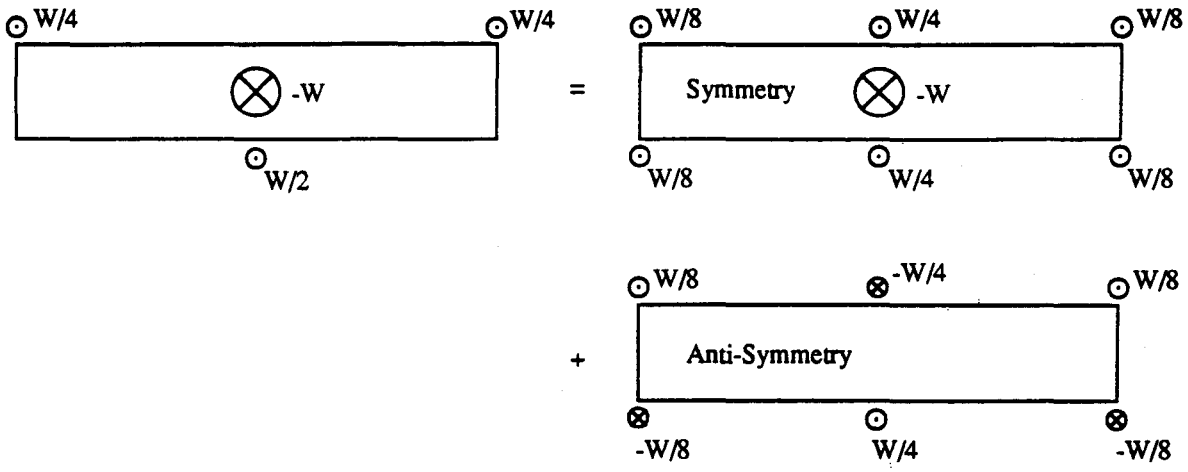

Figure 3. Problem Decomposed into Symmetry and Antisymmetry Solutions.

VERTICAL DEFORMATION

For resisting the vertical loads, the six-strut system leads to many misconceptions. This system is not similar to a three point supported beam. Since the six-strut is determinate, the reactions of the vertical struts are independent of their axial position along the beam, unlike the three point support beam. Figure 4 shows the middle reaction for the two different support cases. The vertical deflection depends on the location of the supporting strut. Figure 5 shows the effect on vertical displacement as the location of the outside strut varies. Since the outside strut carries 1/4 of the weight, the deflection can be minimized by optimizing the location of the support between the quarter point and the end of the beam. The lowest maximum vertical displacement for the six-strut system is 0.28mm compared to 0.68mm for a 2-point simple support system.

TORSIONAL DEFORMATION

This arrangement of the six struts will inherently generate a torsional deformation in the structure. This is due to the asymmetry of the arrangement as shown in Figure 3. The torsional angle can be computed as

$$\theta = \frac{TL}{JG}$$

where
W = component weight
T = Wd/8
J = torsional moment of inertia
G = shear modulus
d = transverse distance between support
L = axial distance between outer and middle supports

CONCLUSION

Superimposing the two solutions gives the total deformation. The method above can give a quick assessment on the deformed shape. Local deformation due to the strut is not considered in the solution. This methodology applies for arbitrary loading and non-symmetry location of the struts as well. In such a case, the reaction on a strut is not trivial but can be obtained from the static equations.

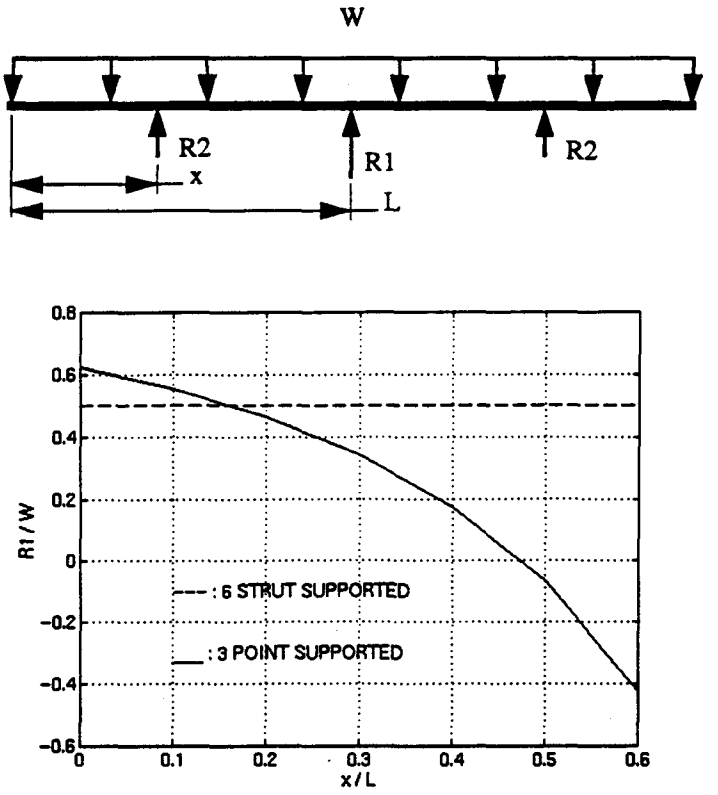

Figure 4. Middle Reaction is a Function of Support Location.

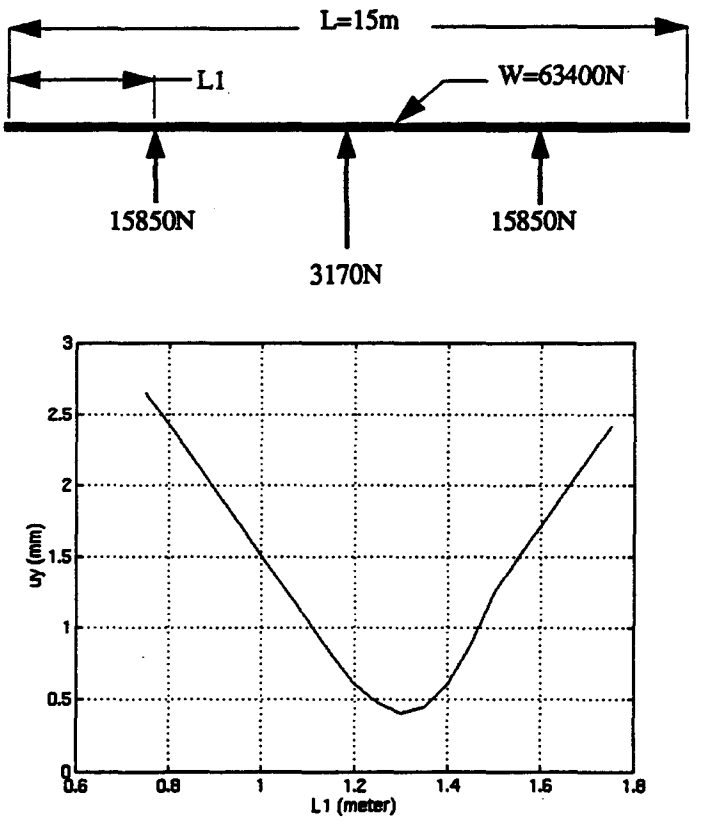

Figure 5. Six-Strut Support Maximum Vertical Deflection is a Function of Outside Support Location.