SSCL-Preprint-305

SSCL-Preprint-305
April 1993
Distribution Category: 414

C. Goodzeit
R. Jayakumar
F. Nobrega
G. Snitchler
R. Stiening

Parameters and Conceptual Design of a Vertical Bending Magnet for the Super Collider

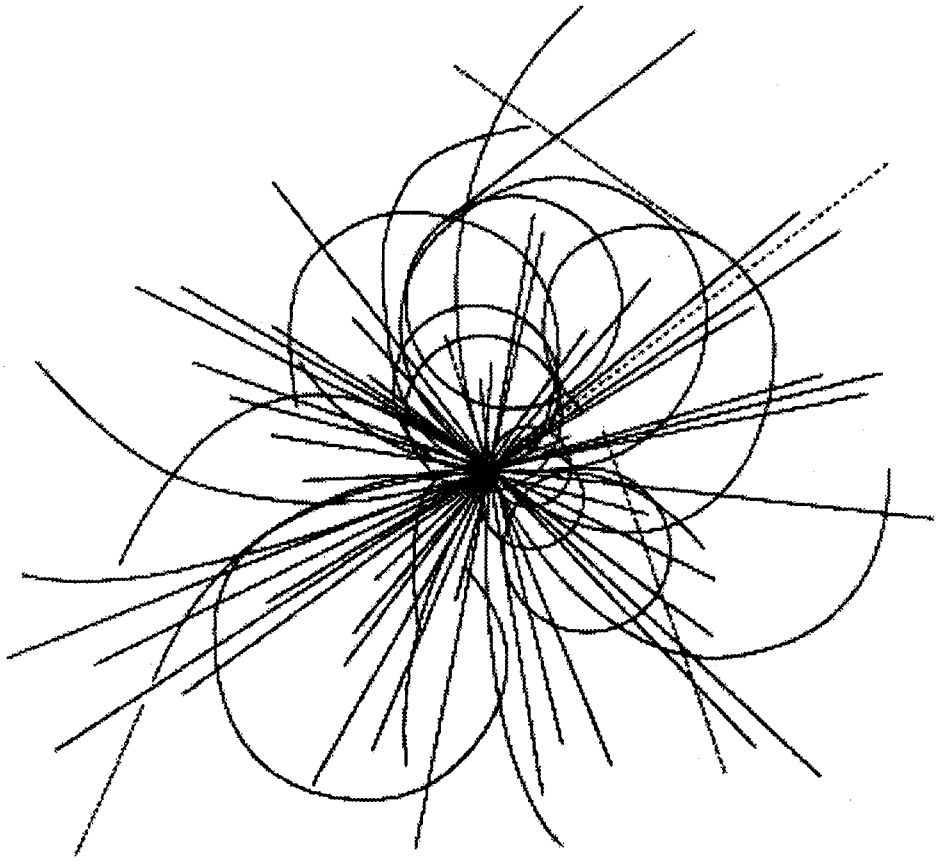

Superconducting Super Collider Laboratory

To be published in *Supercollider 5*

SSCL-Preprint-305

Parameters and Conceptual Design of a Vertical Bending Magnet for the Super Collider*

C. Goodzeit, R. Jayakumar, F. Nobrega, G. Snitchler, and R. Stiening

Superconducting Super Collider Laboratory†
2550 Beckleymeade Ave.
Dallas, TX 75237

April 1993

*Presented at the Fifth Annual International Symposium on the Super Collider, May 6–8, 1993 San Francisco, CA.
†Operated by the Universities Research Association, Inc., for the U.S. Department of Energy under Contract No. DE-AC35-89ER40486.

PARAMETERS AND CONCEPTUAL DESIGN OF A VERTICAL BENDING MAGNET FOR THE SUPER COLLIDER

C. Goodzeit, R. Jayakumar, F. Nobrega, G. Snitchler, and R. Stiening

Superconducting Super Collider Laboratory*
2550 Beckleymeade Avenue
Dallas, Texas 75237-3997

INTRODUCTION

Special dipole magnets are required near the intersection regions of the Supercollider to bend the beams in the vertical plane so that they can be made to converge for collision. This paper presents the design requirements and parameters for one of these magnets (the BV1C splitter) along with the magnetic design and conceptual mechanical design for the cold mass.

FOREWORD

A high field (6.5 T), large aperture (87mm) dipole magnet is required to bend the Collider beams in the vertical plane to cause them to converge and then separate in the SSC Interaction Regions. The location of these magnets in the lattice is shown in Figure 1 and eight such magnets are required for the Collider. Presently the magnet is in the conceptual design stage and a program has been planned for its development. This paper presents: (a) the design requirements, (b) the parameters and conceptual design, and (c) outlines the development plans for the cold masses for these magnets.

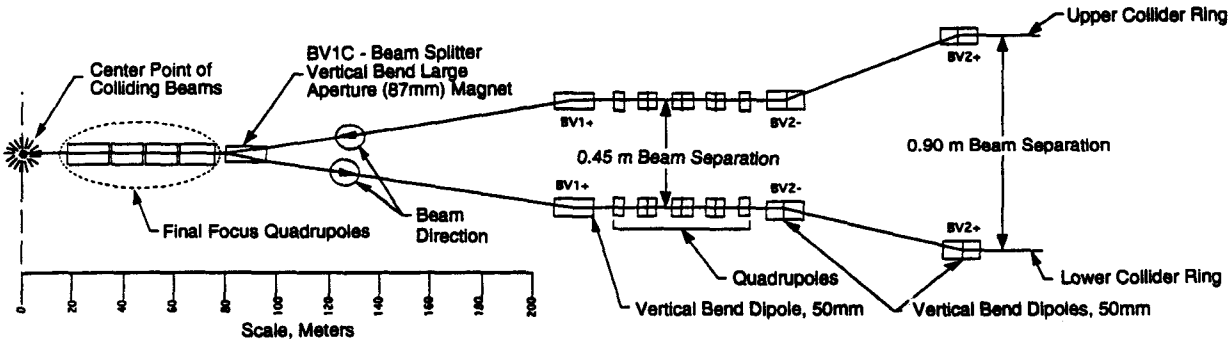

Figure 1. Position of BV1C- in the Lattice

* Operated by the Universities Research Association, Inc., for the U. S. Department of Energy under Contract No. DE-AC35-89ER40486.

DESIGN REQUIREMENTS

These magnets are related in performance to the Collider dipole magnets; however, they have to achieve this performance at the large aperture of 87mm. In general the requirements are as follows in Table 1.

Table 1. General Magnet Requirements.

Parameter	Requirements
1. Aperture	Between 85 and 100mm (87mm selected)
2. Magnetic Length	To match that of the CDM. Two versions may be required, one at 15m and the other @ 13m.
3. Central Field	6.5±5% at 6714A
4. Operating Temperature	4.2K
5. Multipole Tolerances	High field only. Obtained by scaling the high field CDM multipole tolerance to 2.5 cm radius from 1 cm radius. No specification for persistent current multipoles.
6. Energy Deposition in Coils	Synchrotron radiation: ≤ 0.69 W/m Beam Scattering: 2.90 W per magnet
7. Operating Margin	≥10% at high field in the presence of the above heat load.
8. Training Performance	No training quenches to reach full field. No more than 2 to reach 105% of full field.
9. Coil End Design	Design objective is to have zero net multipole content when averaged over the individual coil end regions.
10. Helium Containment	The helium containment assembly is to required to be inspected and stamped for conformance to the ASME Unfired Pressure Vessel Code, Div. 1.
11. Radiation Hardness	Coil and components $\geq 10^9$ Rads without significant deterioration.

PARAMETERS AND CONCEPTUAL DESIGN

The cold mass uses a two-layer cosine theta coil design with an 87mm aperture. A detailed discussion of the magnetic design for this magnet along with the multipole requirements is given by Venkatraman, et. al[1]. Table 2 lists cold mass parameters while Table 3 shows the conductor characteristics used in this design. In order to satisfy the performance requirements for this magnet, the superconducting cable that is used for the inner coils of the CDM has been selected for both the inner and outer coils.

Table 2. Magnet Parameters

	Inner Coil	Outer Coil
Number of Turns	32	32
Number of Wedges	4	1
Inner Diameter, mm	87	112.7
Outer Diameter, mm	111.7	137.4
Calculated Critical Current, A	7522	8847
Operating Margin, B_0/B quench	11%	25%
Other dimensions:		
Width of Collar @ Outer Coil, mm		30
Inner Diameter of Yoke, mm		197
Outer Diameter of Yoke, mm		470

Table 3. Cable Characteristics

	Units	Value
NbTi, High Homogeneity, %Ti	%	47
Strand Diameter	mm	0.808
Twist Pitch of Strand	mm	13±.15
Copper: S. C.		1.3
Number of Strands per Cable		30
Width of Cable (Bare)	mm	12.34
Mid-Thickness of Cable (Bare)	mm	1.458
Keystone Angle	Deg.	1.2
Lay Pitch of Strands in Cable	mm	86
Filament Diameter	μ	6
Number of Filaments/Strand		8000
Critical Current Density in NbTi @ 4.2K and 7T	A/mm^2	1700
Critical Current in Cable @ 4.2K and 7T	A	10000

The two dimensional cross section of BV1C- is shown in Figure 2. In addition to the above features, the baseline design concept uses:

a. A horizontally split yoke with notches at the midplane for a weld backup strip. The yoke contains features for stacking and alignment at the 45° position which are used to obtain a "twist free" cold mass during the shell welding process. Standard bus slots and helium by pass holes are also present in the yoke. It is intended that these yoke lamination will be fine blanked from 6.35mm thick ultra low carbon steel.

b. High manganese steel collars which index in precision slots at the poles and have a line to line fit with the yoke. These collars will be stamped from 1.5 mm thick material and spot welded into left/right alternating pairs. Hard phosphor bronze keys having a taper angle of 3° are used to assemble the pre-stressed coils into the collars.

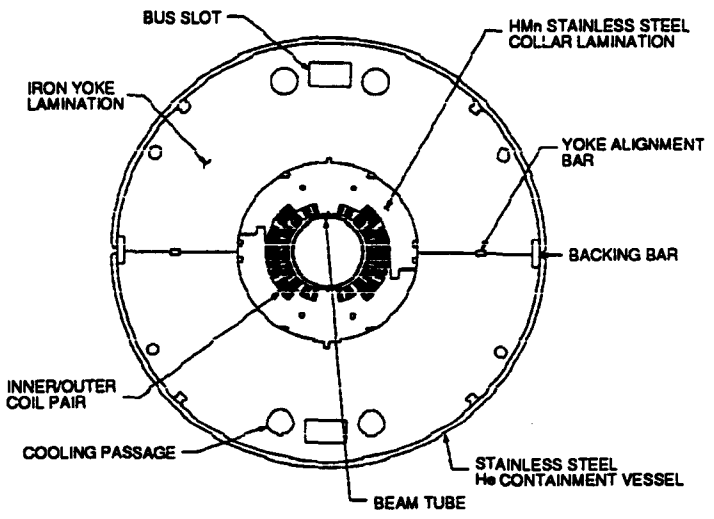

Figure 2. Two Dimensional Cross Section of the 87mm BV1C- Dipole

The baseline cable insulation is to double wrap the cable first with a 48-50% overlap layer of a 1-mil thick polyimide insulation such as Kapton® or Apical® without adhesive. The second layer is a butt wrap of the same type of film as used in the first wrap covered with a thin film of thermosetting adhesive such as Sheldahl 3PM® or Cryorad®. This system has been tested for punch through resistance and compressed insulation thickness indicating that

it has about twice the punch through rating for the previously used insulation with fiberglass-epoxy outer wrap and the compressed insulation thickness is 4.25 mils per side.

The construction of the cold mass at the (lead) end of the magnet is shown in Figure 3. The end plate is welded to the inside of the shell and supports the ends of the coils. In the non-lead end of the magnet, coil ends are loaded with four end force transducers which are adjusted to the required end load of about 20 KN. Four set screws are used in the lead end to apply a similar load. Other details of this construction include a ramp section of the inner coil first turn which is contained in an insulated section clamped in the collars at the end of the straight section as shown. This cable is solder spliced to the outer coil first turn at the radius of the outer coil. The upper and lower coils are solder spliced together using the outer coil leads on the outside of the end plate and encapsulated in the insulated retainer. The inner coil leads continue into the end region where they are connected to the power busses. The 6.35mm thick ultra low carbon laminations terminate at the end of the straight section of the magnet. The collared coil is then supported radially by 3mm thick stainless steel lamination which extend over the saddle end region of the coil to reduce the peak field effect at the ends. Helium containment is provided by the end dished heads which are welded to the shell and by the beam tube which passes through the inner coil aperture and it welded to the end domes. One end of the beam tube is supported from the end dome by a bellows to take up the differential contraction in case of a large transient temperature difference that might occur between the beam tube and the rest of the cold mass.

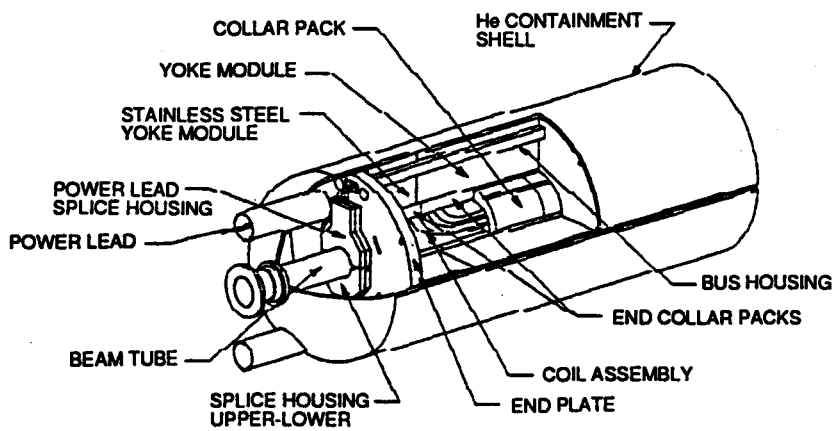

Figure 3. Lead End of the BV1C- Dipole Cold Mass

PROGRAM PLAN

One lot of 4 model magnets, each 1.8 meters long is scheduled to be completed and cold tested by July 1995. The prototype magnet phase begins after the completion of the model phase in July 1995. This phase consists of one prototype cold mass and cryostat and is scheduled to be completed in December 1996. The cold test measurements of the model and prototype phases will be used for the final magnetic iteration if needed in the production phase that will begin in July 1997. The production phase consists of eight magnets.

REFERENCES

1. V. Venkatraman, et, al., "Magnetic Design Considerations for the SSC Vertical Bending (BV1C) Magnet", IISSC 1993, Plenum Publishing Corporation, 1993.