SSCL-Preprint-292

SSCL-Preprint-292
May 1993
Distribution Category: 414

G. Chapman

The Proposed Vacuum System for the Interaction Regions of the Superconducting Super Collider

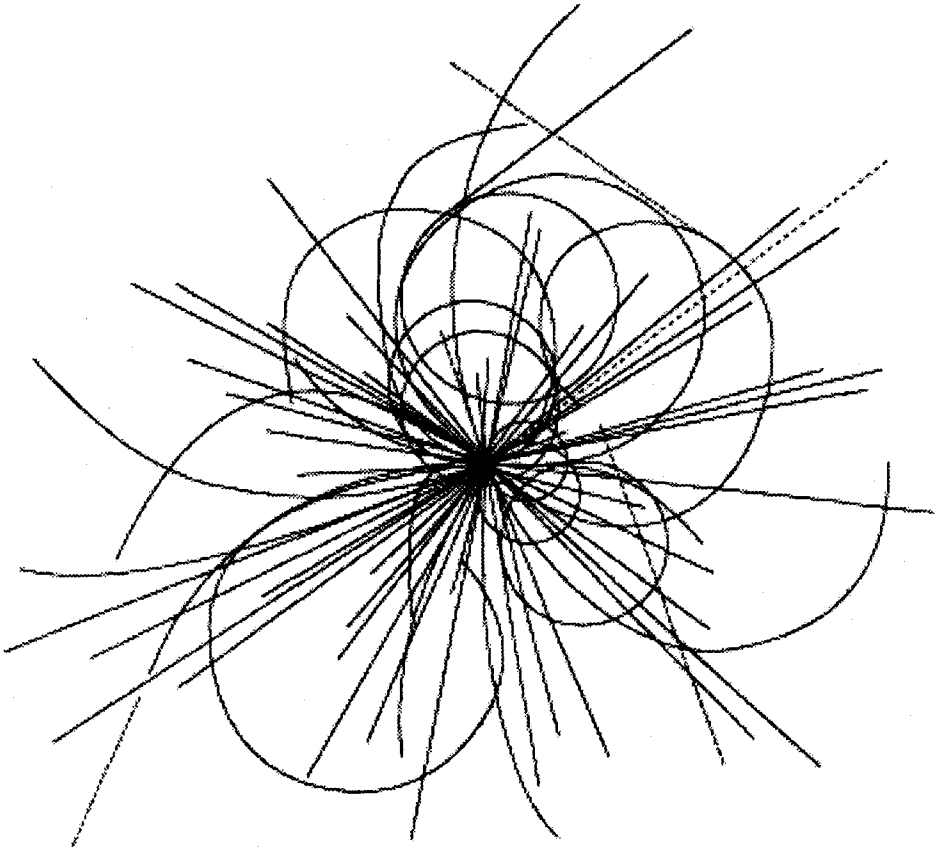

Superconducting Super Collider Laboratory

To be published in *Supercollider 5*

SSCL-Preprint-292

The Proposed Vacuum System for the Interaction Regions of the Superconducting Super Collider*

G. Chapman

Superconducting Super Collider Laboratory†
2550 Beckleymeade Ave.
Dallas, TX 75237

May 1993

*Presented at the Fifth Annual International Symposium on the Super Collider, May 6–8, 1993 San Francisco, CA.
†Operated by the Universities Research Association, Inc., for the U.S. Department of Energy under Contract No. DE-AC35-89ER40486.

THE PROPOSED VACUUM SYSTEM FOR THE INTERACTION REGIONS OF THE SUPERCONDUCTING SUPER COLLIDER

G. R.Chapman

Superconducting Super Collider Laboratory*
2550 Beckleymeade Avenue
Dallas, TX 75237-3997

INTRODUCTION

The design of the beam pipe located in the GEM and SDC detectors situated at interaction regions 5 and 8 of the SSC is influenced by three major considerations. The first is the desired pressure in the vacuum system. Experience has shown that a pressure of 10^{-8} torr is achievable under realistic operating conditions. Preliminary calculations show that at 10-8 torr, the beam gas background will remain acceptably low. In the Central Tracker, the beam gas contribution at a pressure of 10^{-8} torr is 2 orders of magnitude below that due to primary interactions. In the muon system, the neutron fluence due to beam gas is a factor of 20 below that due to particle-to-particle (pp) interactions. However, if the vacuum were degraded to 10^{-7} torr, the neutron fluence in the muon system due to beam gas interactions, would become comparable to the rate of pp interactions. Furthermore, continuing studies will enable us to better shield the pp source rather than the beam gas source. The second major input to the beamline design is driven by the desire to minimize secondary interactions in the beam pipe itself. In the central region, this is achieved by the use of a thin walled Beryllium section of pipe. In the forward regions, the path length of particles traversing the beam pipe is much longer, and it is necessary to avoid a potentially large flux of neutrons which could be created in the beam pipe walls. The GEM vacuum assembly has been designed to provide a conical section of beamline arranged such that it lies outside a cone of 0.5 degrees from the interaction point and is therefore entirely in the shadow of the Forward Calorimeter. Work is ongoing to incorporate appropriate flares in SDC beam pipe. The third consideration is a more practical one. The assembly sequence of both the GEM and SDC Detectors proceeds in such a way that the beam pipe must be designed in discrete sections that can be installed concurrently with the overall installation of the experiment.

BEAM LINE DESCRIPTION FOR THE GEM VACUUM SYSTEM

Length and Diameter

The total length of the beam pipe between the collimators of the final focusing quadrupoles is 62 m: ±31 m from the Interaction Point (IP). It consists of a central section of Beryllium pipe running through the Central Tracker, coupled to successive lengths of Stainless Steel, or Aluminum alloy pipe which vary in diameter. In addition to the pipe itself, there are associated pumps, bellows, valves and Beam Position Monitors. The beam pipe and its associated hardware from the IP to +31 m is shown in Figures 1 and 2. The current length, diameter and location of each sector are listed in Table 1.

Material and Thickness

The beam pipe passing through the Tracker is Beryllium, nominally 1.5 mm thick. The low density, low out-gassing rate and high rigidity of Beryllium makes it an ideal material to satisfy the design requirements.

* Operated by the Universities Research Association, Inc., for the U. S. Department of Energy under Contract No. DE-AC35-89ER40486.

Stainless Steel and Aluminum alloys have been considered for the subsequent sections of pipe. Stainless Steel is preferred for its ease of fabrication and vacuum conditioning. Aluminum is more difficult to fabricate and condition, and its use could result in a higher average pressure; however, it's residual activation characteristics are better than those of Stainless Steel. Never the less, GEM is designing with stainless steel as the beam pipe in the Calorimeters is so close to the cryostat walls that there will be negligible difference in activation.

The nominal thickness of the Stainless Steel pipe will be not greater than 1 mm for 80 mm diameter sections and not greater than 2 mm for 200 mm diameter sections. The thickness of the conical section can be gradually increased by increasing the pipe diameter, from 1.2 mm, where the diameter of the pipe is 134 mm, to 4.2 mm thick at its largest. Table 2 lists the beampipe by values for the SDC.

Table 1. Current length, diameter and location of eack sector.

PIPE SECTION	NO.	LOCATION (MM)	LENGTH (MM)	DIAMETER (MM)
Central Tracker with Bellows	1	IP to ±2000	4000	80
End Cap Calorimeter with NEG	2	±2000 to ±3500	1500	200
Forward Calorimeter with BPM Assembly	2	±3500 to ±8512	5012	80
Forward Field Shaper conical with Ion Pumps	2	±8512 to ±31000	22488	134 TO 518

Table 2. SDC Configuration.

PIPE SECTION	NO.	LOCATION (mm)	LENGTH (mm)	DIAMETER (mm)	TAPERED ANGLE (deg)
Central Barrel Tracker	1	IP to 4327	8654	80	
End Cap Calorimeter	2	±4327 to ±6837	2510	80 to 126.95	0.53
From Far End of End Cap Calorimeter to Near End of Forward Calorimeter (with Sector Value)	2	±6837 to ±12670	5833	126.95 to 204	0.53
Forward Calorimeter	2	±12670 to ±15420	2750	60 to 90.446	0.140
From Far End of Forward Calorimeter to Collimator with Sector Value	2	±15420 to ±21240.8	5820.8	90.446 to 121.61	0.140

PRESSURE REQUIREMENTS IN THE BEAM PIPE VACUUM SYSTEM

To achieve reliable operating pressure of 10^{-8} torr under realistic conditions, requires a conservative approach to the design of the vacuum system. For example, it is desirable to perform a final *in situ* bake-out of the entire beam pipe although at present this appears to be difficult in certain areas of the experiment and impossible in others. To understand the vacuum profile under these conditions, a more detailed set of vacuum calculations, assuming less than perfect conditions, has been accomplished and is discussed in detail in technical note GEM TN-93-290. This information is summarized in Figures 3 and 4. For GEM and Figure 5 for the SDC vacuum system.

The pumping speed requirement and pumping locations are determined by these calculations, consistent with the detector geometry. This implies that unique pumping systems are required.

GEM Vacuum Assembly

A combination of ion pumps and Non-Evaporable Getter (NEG) pumps are required to reduce pressure in the Beam Pipe to the required ultra high vacuum range (10-9 torr) or a lower parameter will require ion pumps plus sublimation with pumping speeds of about 1000 Liters-per-second (1/s) located at positions shown in Figure 1. The ion pumps must be able to operate in the GEM magnetic fields. These pumps will be specially designed to operate without the use of standard permanent magnets. Pumping will be achieved using the magnetic field of the GEM solenoid when it is on. The pumps will be fitted with a supplementary coil to supply a low magnetic field (1.5 k gauss) for pumping when the GEM magnet is off. To maximize pumping speed, the connections between the ion pumps and the beam pipe must be the same diameter as the ion pump inlets and as short as possible.

In the central region the problems are more acute. The long distance and low conductance of the 80 mm beam pipes in the Central Tracker and Endcap Calorimeter sections require some auxiliary pumping. We plan to use heat activated Non-Evaporable Getter (NEG) pumps with pumping speeds of 300 l/s in front of the End Cap Calorimeters in order to achieve the best possible vacuum without the inclusion of more massive ion pumps. A prototype NEG pump is currently under construction. It uses conduction heat activation rather than a direct electrical connection through the vacuum wall. If successful, this technique will allow for more reliable operation in the inaccessible Central Tracker region.

The SDC detector assembly (due to a smaller solenoid) is arranged so that it is possible to locate all ion pumps outside the influence of the magnetic field of the solenoid, hence commercially available ion/sublimation pumps are proposed to be used positioned as shown in Figure 5.

Calculation Results for GEM and SDC

GEM contains one NEG of 300 l/s and four ion pumps plus sublimation of 1000 l/s, the calculated pressure distribution for the beam pipe from the interaction point to 31 m is shown in Figure 4. The average pressure is 7.06×10^{-9} torr. The calculation in the interaction region, shown in Figure 3, shows that the pipe diameter of the End Cap Calorimeter section is critical to the average pressure in this region. If an 80 mm diameter pipe is used in this section, the average calculated pressure changes from 1.02×10^{-8} to 1.28×10^{-8} torr, remaining below the design figure, no matter where the NEG is placed. However, if a 200 mm diameter pipe is used in the End Cap section, the average calculated pressure drops to 7.66×10^{-9} torr.

SDC consists of the calculated average pressure without the addition of a supplementary NEG pump and with ion pumps positioned as shown in Figure 5 is 4.87E-9 torr with a pressure profile as shown in Figure 6.

Out-gassing Rate for standard calculations for pressure distribution in beam pipes assumes perfect conditions with correctly baked-out pipes. As mentioned above, a final bake-out of the GEM and SDC beam pipes appears to be difficult for most of the pipe sections and impossible for the Central Tracker area. Therefore, less perfect conditions must be assumed in our calculations. The out-gassing rates in these calculations, in contrast with perfect conditions, are listed in Table 3.

Table 3. Out-gassing Rates (torr.liter/sec. cm^2).

MATERIAL	IN THIS CALCULATION	PERFECT CONDITIONS
Beryllium	5.0×10^{-11}	7.0×10^{-14}
Stainless Steel	5.0×10^{-11}	2.0×10^{-13}

INTERFACES

Detector Beamline/Machine Interface

The final focusing quadrupoles are located at ±35 m from the interaction point, with 3 m long protection collimators located in front of the quads, beginning at ±32 m. It is proposed that the warm flange of this collimator should be the connecting interface between the Gem Detector vacuum assembly and the collider vacuum assembly. This and other machine/detector interface issues are being defined and documented in an ongoing series of machine/detector interface meetings.

Beamline/Detector Interface

Assembly of the beam pipe will be in sections as the assembly of the GEM and SDC Detector progresses. This assembly procedure (for GEM) is described in detail in Chapter 9, Facilities, Assembly and Installation. Further documentation is provided in a Gem Technical Note, GEM TN-93-289.

GEM: Beam Position Monitors (BPM) and Pumping Station Provisions are being made for the installation of two Beam Position Monitors (BPM's), one on each side of the interaction point, located immediately after the Forward Calorimeter. Each BPM assembly would consist of a gate valve (about 4" ID), a BPM and two bellows assemblies. A decision on the final location of the BPM's will be made after the details of other detector parameters are frozen.

There are four pumping stations on each side of the interaction point. Each pumping station consists of an ion pump plus sublimation with pumping speeds of 1000 l/s, a 6" diameter gate valve and a cross, which has a port for an ion gauge or a probe of a mass spectrometer and a port for the roughing line. The positions of the pumping stations are shown in Figure 1. A pressure distribution calculation of the beam pipe is shown in Figures 3 and 4. The pumping speed requirements and pumping locations are determined by this calculation. Access must be maintained to all ion pumping stations. To minimize material in the highly radioactive

environment near the beam line, there are no permanently mounted roughing pumps included in the design. Any routine maintenance or repairs will require access for personnel and equipment to the ion pumping stations.

SDC: No firm decision has yet been taken concerning the installation of beam optic monitors in the beam line of the interaction region of the SDC detector.

Beam Pipe Support and Alignment of the support of the beam pipe and associated hardware must meet two requirements: 1) it must support the weight of the pipe and vacuum related hardware, and 2) it must be adjustable to accommodate deflections. In most of the sections, the beam pipe must also be able to slide horizontally along the beam direction during the installation procedure. A wire or band support will be used between the Central Tracker pipe section and the Barrel Calorimeter. It must be vertically adjustable and should allow a small amount of movement along the pipe direction due to thermal retraction. The beam pipe, in the Endcap Calorimeter section, needs a guiding-slide support mechanism to meet the requirement of installation. The section of conical pipe through Forward Field Shaper (FFS) (unique to GEM)will be supported on the inner wall of the FFS. In front of the collimator, there will be a 4 m outer diameter concrete shield around the beam pipe. The support for the pipe and pumps should sit within the shielding. The detailed design of these supports is on going.

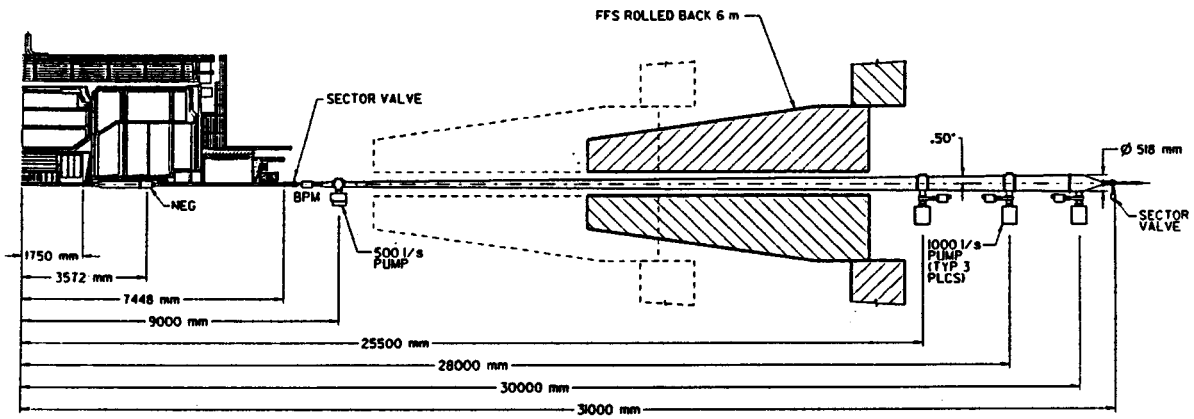

Figure 1. Beam Pipe in the Entire Interaction Region.

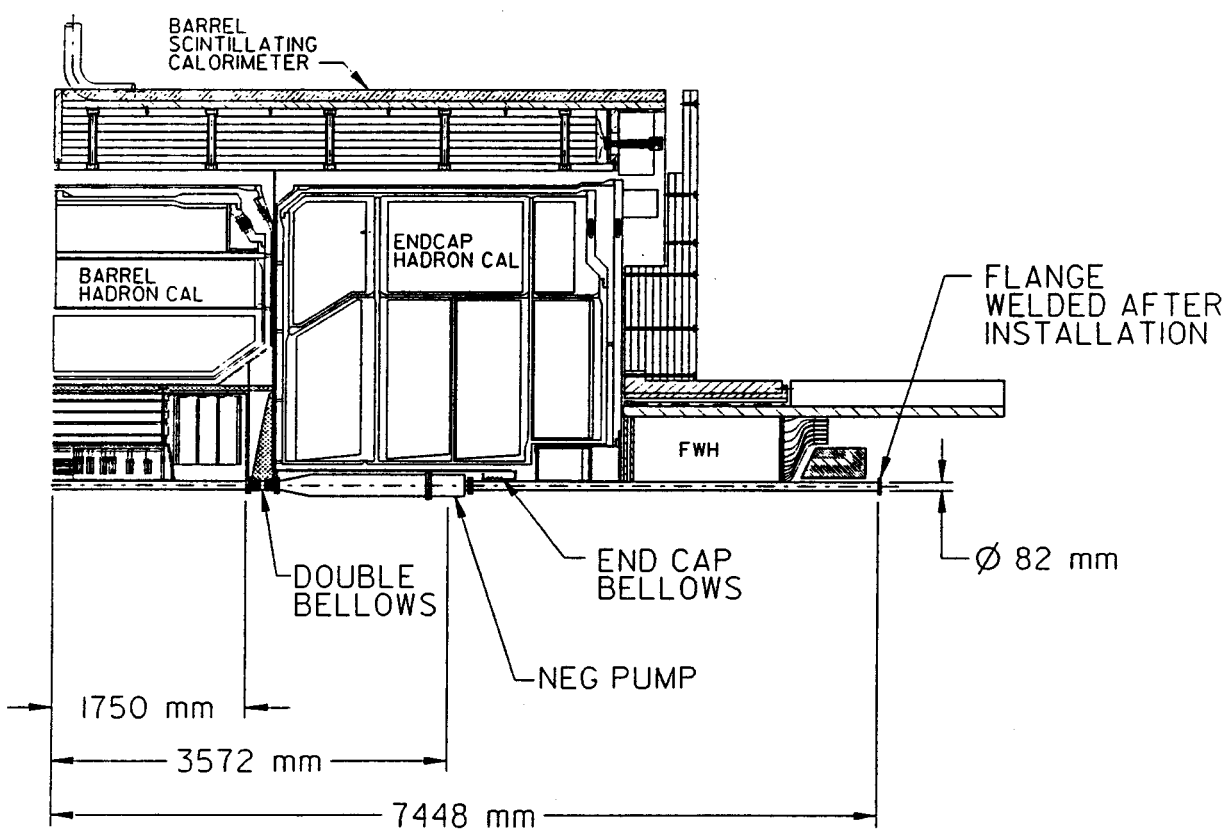

Figure 2. Beam Pipe Installed in the Central Region of GEM.

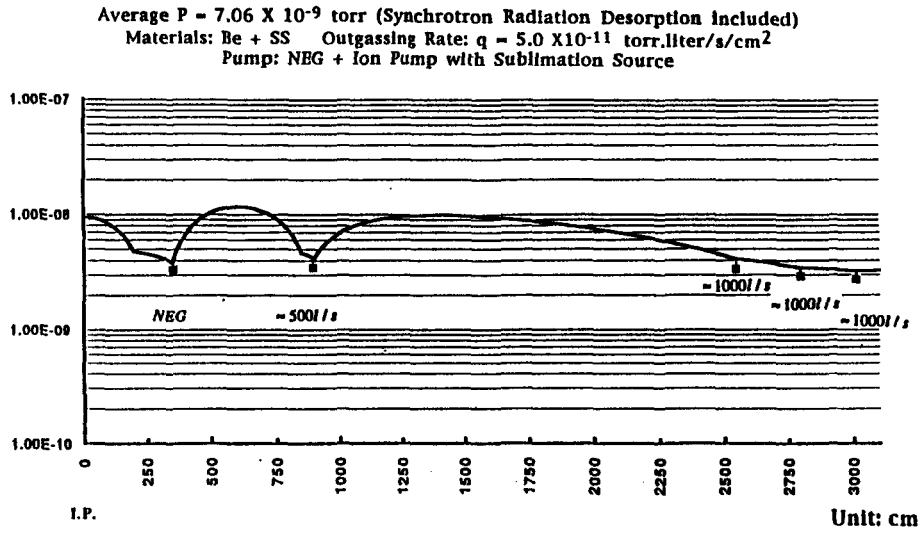

Figure 3. Pressure Distribution in the Entire Interaction Region of GEM.

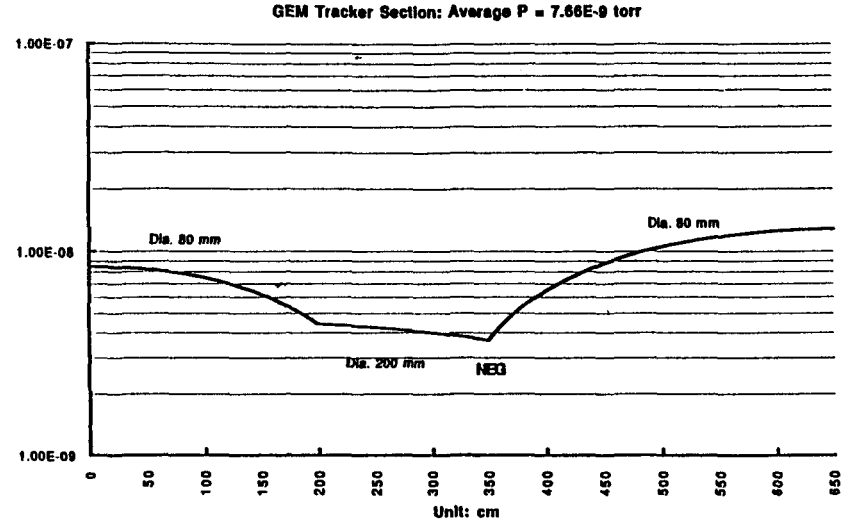

Figure 4. Pressure Distribution in the Central Region of GEM.

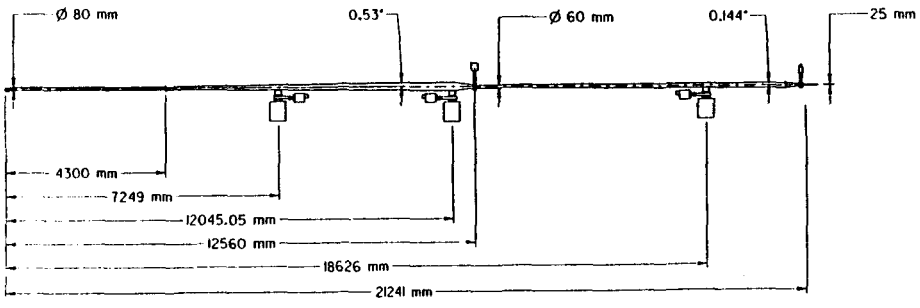

Figure 5. Beam Pipe in the SDC Interaction Region

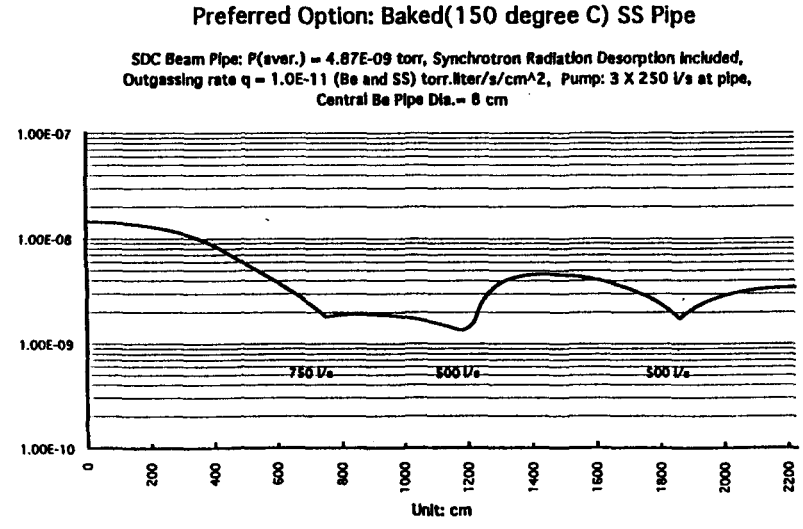

Figure 6. Pressure Distribution iin the SDC Interaction Region.