SSCL-Preprint-284

SSCL-Preprint-284
April 1993
Distribution Category: 414

C. Corbett
L. Ketcham
R. Pletzer
S. Shapiro
R. Viola
J. Walton
R. Wilkins
S. Bagwell
W. Barnes

Optical Measurement of SSC ARC Quadrupole Cold Mass Location

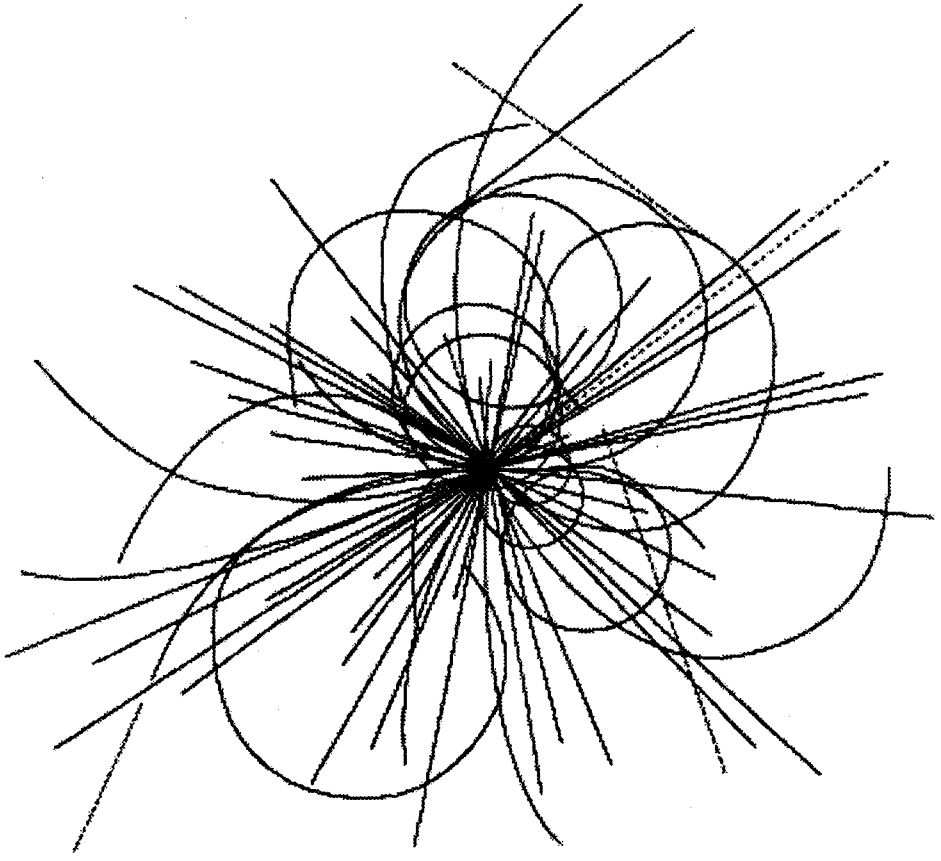

Superconducting Super Collider Laboratory

To be published in *Supercollider 5*

SSCL-Preprint-284

Optical Measurement of SSC ARC Quadrupole Cold Mass Location*

C. Corbett, L. Ketcham, R. Pletzer, S. Shapiro,
R. Viola, J. Walton, R. Wilkins, and S. Bagwell

Superconducting Super Collider Laboratory†
2550 Beckleymeade Ave.
Dallas, TX 75237

W. Barnes

Precision Optics Corporation
22 East Broadway
Gardner, MA 01440

April 1993

---

*Presented at the Fifth Annual International Symposium on the Super Collider, May 6–8, 1993 San Francisco, CA.
†Operated by the Universities Research Association, Inc., for the U.S. Department of Energy under Contract No. DE-AC35-89ER40486.

OPTICAL MEASUREMENT OF SSC ARC QUADRUPOLE COLD MASS LOCATION

C. Corbett,[1] L. Ketcham,[1] R. Pletzer[1] S. Shapiro,[1] R. Viola,[1] Jeff Walton,[1] R. Wilkins,[1] S. Bagwell,[1] and W. Barnes[2]

[1]Superconducting Super Collider Laboratory*
2550 Beckleymeade Ave.
Dallas, TX 75237

[2]Precision Optics Corporation
22 East Broadway
Gardner, MA 01440

INTRODUCTION

The operation of the collider requires that the ARC quadrupoles' beam center and rotational configuration be held to the tight tolerances of 0.2 mm rms and 0.5 mradian rms. The design of the collider superconducting magnets prevents direct access to the cold mass during operation. As a result, cold mass position is inferred from the relationship established by warm measurements relative to a secondary fiducial located on the vacuum vessel and an offset (warm to cold correlation) to account for the position change for a cold magnet. There is concern that the relation of these fiducials to the magnet centerline may change unpredictably due to the temperature drop required for superconducting operation or due to long term creep. This paper reports on a design that will allow visual observation of the cold mass shell position and roll orientation under cold as well as warm conditions.

This paper will present a description of the window configuration and status/results of tests which have been conducted warm and cold in the single magnet configuration. Future testing in a multiple string configuration is being considered.

OPTICAL WINDOW DESIGN

The optical window design was considered as the most straightforward design approach of measuring cold mass position during cold operating conditions. Babcock & Wilcox (B&W) conducted a trade study on various approaches to an "in-situ" cold mass fiducial.[1] The conclusion of the B&W study was that the optical system presented potential reliability problems with vacuum integrity. CERN's approach to the problem[2] is to attach a silicon rod, covered with gold for electrical contact, to the cold mass and determine cold mass position through eight active capacitive sensors which are installed around the rod on two levels and in two directions. One additional sensor is located above the rod and used to determine vertical movements. All nine sensors are attached to

* Operated by the Universities Research Association, Inc., for the U.S. Department of Energy under Contract No. DE-AC35-89ER40486.

the flange of the cryostat and there is no physical contact between the rod and the sensors and the sensors work at normal temperatures.

The design goals for our project were to not compromise vacuum integrity, minimize any extra heat leak to the cold mass, and to have enough resolution to make meaningful measurements relative to the tight tolerance for the quadrupole. The design which met these goals is detailed below. The design assumed the position of the magnet field relative to these fiducials on the cold mass would not change from warm to cold.

Mechanical Design

The mechanical design is composed of a clear optical window in the vacuum vessel, an optically coated window in the 80 K shield, a through hole in the 20 K shield, cold mass autocollimation mirrors and targets, and vacuum vessel fiducials. Four locations, at two axial stations on the magnet were instrumented in this manner. A cross section showing the assembly is shown in Figure 1. The tolerances and specifications for the glass, and mechanical parts are contained in Reference 3. A pentaprism was used to make the optical measurements through the top ports.

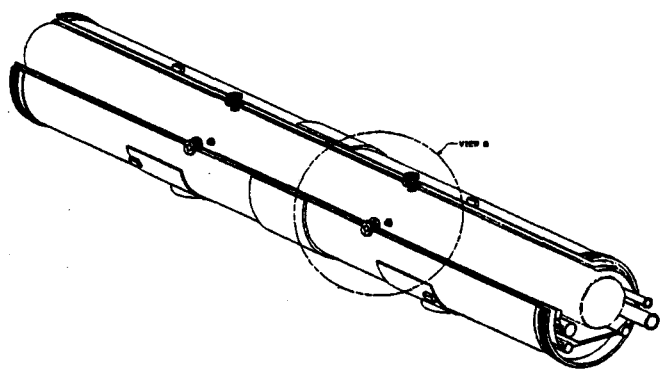

Figure 1. Optical Window Installation.

Thermal Analysis

A thermal analysis was performed in order to determine the effect of the optical windows on the 4 K heat load. The baseline QCC 4 K heat load is predicted to be 0.086 watts (0.232 watt 4 K static budget). Without windows in either the 20 K or 80 K thermal shields the 4 K heat leak would rise to 2.087 watts or a factor of 20. With no 20 K window and an 80 K window with a surface emissivity of 0.15 (actual coating was less) the heat leak was 0.104 watts or a 16% increase over the baseline. This was considered acceptable for these R&D magnets.

Optical Design

A first item of concern was the possibility of apparent mirror displacement caused by warpage in the 80 K shield. A ray tracing analysis performed at Precision Optics for an initial window angle of 20 degrees, yielded an apparent fiducial motion of 6.4 micrometers for a 2 degree change in window tilt. It was judged that this would not invalidate the observations of mirror fiducial motion.

Heating of the window by the 300 K vacuum vessel is of concern since the center of the 80 K window could be at a significantly higher temperature than 80 K. Assuming a good conduction path provided to the aluminum flange by the pressure of the wavy washer, the modified Bessel function solution[4] for this case of heat conduction may be simplified to obtain the center to edge temperature difference in the window as:

$$\Delta T = (300\text{-}80) \times \left[\, 1\text{-}1/\, I_0\left(a\sqrt{(h/kd)}\right)\right] .$$

I_0 is the modified Bessel function of the first kind, a is the window radius, h is the coefficient of heat transfer, k the window thermal conductivity, and d is the window thickness. The temperature differential is 95 K for an uncoated window. An indium tin-oxide (ITO) coating reduces this temperature differential to 9.3 K. ITO coating both sides of the window would further reduce the temperature difference even further but would also reduce the visible transmission to 65%.

The optical aberration effect of the radial temperature distribution was also examined by Precision Optics. At these low temperatures the index of refraction and thermal length change are not linear functions of temperature. Index values for fused silica are found in Waxler and Cleek[5] and length data as NIST SRM 739. Data for BSC-2 glass appear in Molby.[6] Calculations for the 80 to 175 K temperature differential range give values of optical path difference of 113 nm for BSC-2 and 438 nm (about 0.7 visible wavelengths) for fused silica. The effect of these changes on alignment might be acceptable since most of the temperature difference occurs near the edge of the window; however, the use of the ITO coating substantially eliminates this source of optical aberration.

INSTALLATION

There were no major obstacles to the installation of the optical windows into the QCC magnets. Surveyors were required to get the proper orientation of the cold mass mirrors/targets or else a slight cold mass rotation during cooldown might have resulted in the loss of the ability to autocollimate. Precise placement of the mirrors and targets was observed to make sure that everything would line up and there would be enough room to see the targets warm as well as cold. Worst case axial thermal movement of the cold mass at the axial location selected was predicted to be 7.3 mm. The MLI covering the thermal shields will shrink more than the thermal shields, as a result, it must be cut back slightly larger than the window aperture. In the second magnet, the MLI was taped over to prevent water vapor condensation from the MLI spacer material as discussed below.

TEST PLANS

The assessment of adequate warm/cold alignment correlation and long term stability will be made by optically measuring cold mass position while warm and then again after cooldown to operating temperature to determine the change in position. Periodic measurements will be made over time to determine long term stability. These optical measurements will be cross checked with a beam tube optical target to survey beam tube positional changes between warm and cold states. The use of an optical target requires that a single magnet be tested on a cold test stand in order to make these measurements.

SSCL Applied Geodesy will establish warm and cold mass position relative to a monumented position by both autocollimation and physical measurements of the coordinates on the cold mass mirror. The same procedure will be followed after magnet cooldown, and the change of cold mass position and roll angle will be determined by the difference between the measured values. Additionally, these measurements will be repeated over time to determine long term positional stability. Applied Geodesy has estimated the accuracy of these measurements to be in the range of +/– 50 micron and 20 microradians. The expected results of these tests will be a measurement of the cold mass positional change from warm to cold and a comparison to the overall CQM alignment budget.

This test will be done at the ASST phase II string test; however, prior to installation in the string QCC 406 was cold tested as a single magnet. This provided an opportunity to make an independent assessment of the optical measurement of cold mass position by a second method. The second method requires a survey of cold mass position warm and cold by using a beam tube optical target. A secondary goal of this test is to measure the stability of the cryostat vacuum vessel fiducials which will be mounted in locations that will closely approximate the production CQM positions.

TEST RESULTS TO DATE

Currently, four epochs of measurements have been completed on QCC 406. Unfortunately, difficulties were encountered in the data collection for the first two measurement epochs. Between the first and second epochs of measurement, going from the warm to cold state, the quadrupole was moved along the test bench a number of centimeters, which negated the first epoch of warm measurements. For the second epoch, cold measurements directly to the cold mass were prohibited by a buildup of ice crystals on the 80 K windows and condensation on the mirrors attached to the cold mass. Although three autocollimations and a single vertical translation value were measured,

the accuracy of these measurements is dubious at best due to the difficulties created by the limited line of sight access and the possible refraction problems created by the ice particles. Epochs three and four were performed with the quadrupole in its warm and cold states, respectively, and a full set of measurements to the cold mass were successfully gathered for each epoch. These results are summarized in Table 1 with the positions 1 and 2 located at the fixed post end of the quadrupole while positions 3 and 4 are located in the sliding post region.

This single comparison shows the cold mass arching slightly in the horizontal plane (the horizontal directions at positions 1 and 4). The vertical translation is the same at each of the post locations. The magnitude of this "monolithic" translation downward when the magnet is cooled is consistent with warm/cold survey measurements of the center of the beam tube made during an earlier thermal cycle.

The measurement of roll through the side windows, positions 1 and 4, is as much as a factor of six less than that measured through the top windows (positions 2 and 3). The reason for this variation between the top and side positions at each post region is unclear and is still under investigation. More study and/or measurements will be required before any definite conclusions can be drawn from the data.

Table 1. QCC 406 Test Results to Date.

Position	Azimuth Cold – Warm (mrad)	Zenith Angle Cold – Warm (mrad)	Vertical Translation Cold – Warm (mm)	Horizontal Translation Cold – Warm (mm)
Epoch 3 – 4				
Fixed Post				
#1 (side)	0.34	0.13	–0.67	N/A
#2 (top)	N/A	–0.50	N/A	–0.16
Sliding Post				
#3 (top)	N/A	–0.20	N/A	–0.11
#4 (side)	–0.23	0.03	–0.67	N/A

N/A – not applicable, that type of measurement not possible

FUTURE WORK/SUMMARY

The data from the single magnet test stand will continue to be evaluated. Similar measurements will be taken for QCC 405A and QCC 406 as they are installed and operated in the ASST string tests. The ultimate result is to determine the validity of the warm to cold correlation approach and the stability of the correlation over time. The authors acknowledge that two magnets are not statistically significant. Further work might also include an assessment of the physical stability of the mirror fiducial and cold mass shell as they are cooled to liquid helium temperature.

A simple design to measure cold mass position while under operating conditions is now under evaluation. While it is hoped this method will not be required in the tunnel, the authors believe the design is capable of acting as an in-situ fiducial.

REFERENCES

1. Babcock & Wilcox, "Final Report for the Development of the In-situ CQM Alignment Measuring System Proposal," MD-200023, dated 22 September 1992.
2. CERN, Private Correspondence between Jeane-Pierre Quesnel , dated 6/26/92 and 8/24/92.
3. SSCL Document M35-000105, "Installation Procedure for Optical Windows in QCC Quadrupoles," 10-20-92, Charles Corbett.
4. W. P. Barnes, "Some Effects of Aerospace Thermal Environments on High-Acuity Optical Systems," App. Opt., 5, 5, 701–711, (May 1986).
5. R. M. Waxler and G. W. Cleek, "The Effect of Temperature and Pressure on Refractive Index of Some Optical Glasses," J. Res. NBS-A, 77A,6,755-763,(Nov.–Dec. 1963).
6. F. A. Molby, "Index of Refraction and Coefficients of Expansion of Optical Glasses at Low Temperature," JOSA, 39,7, 600–611, (July, 1949).