SSCL-Preprint-283

SSCL-Preprint-283
April 1993
Distribution Category: 414

D. Baritchi
A. Jalloh

Multilayer Insulation for the Interconnect Region in the Accelerator System String Test – A Practical Engineering Approach for a New Scheme of Design and Installation Bridges

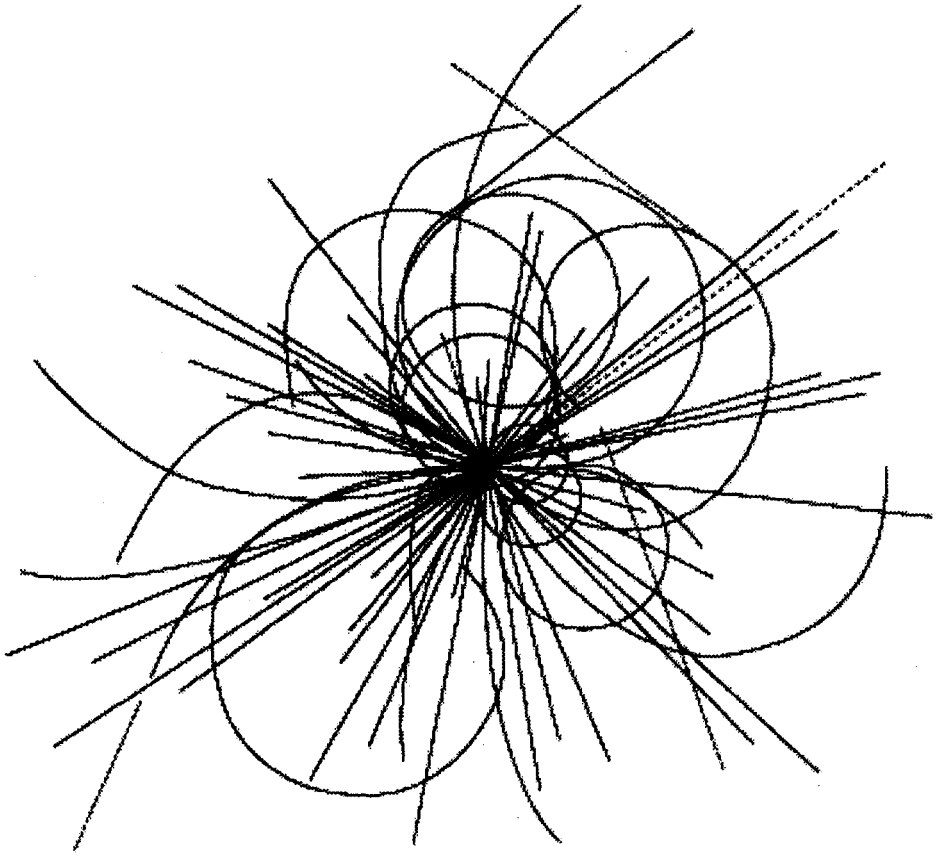

Superconducting Super Collider Laboratory

To be published in *Supercollider 5*

SSCL-Preprint-283

Multilayer Insulation for the Interconnect Region in the Accelerator System String Test – A Practical Engineering Approach for a New Scheme of Design and Installation Bridges *

D. Baritchi and A. Jalloh

Superconducting Super Collider Laboratory†
2550 Beckleymeade Ave.
Dallas, TX 75237

April 1993

*Presented at the Fifth Annual International Symposium on the Super Collider, May 6–8, 1993 San Francisco, CA.
†Operated by the Universities Research Association, Inc., for the U.S. Department of Energy under Contract No. DE-AC35-89ER40486.

MULTILAYER INSULATION FOR THE INTERCONNECT REGION IN THE ACCELERATOR SYSTEM STRING TEST – A PRACTICAL ENGINEERING APPROACH FOR A NEW SCHEME OF DESIGN AND INSTALLATION BRIDGES

D. Baritchi and A. Jalloh

Superconducting Super Collider Laboratory*
2550 Beckleymeade Avenue
Dallas, TX 75237-3997

ABSTRACT

In order to minimize the heat leak in the Accelerator System String Test (ASST) interconnect region, shield bridges and multilayer insulation (MLI) are provided. A sliding joint between shield bridges on adjacent magnets accommodates the contraction that occurs during cooldown. In the original design of the MLI bridges, thermal contraction was provided for by compressing the MLI. During assembly of the interconnect region, it was realized that there was not enough room for the required compression. This resulted in a redesign of the MLI bridges. The new scheme involves splitting and overlapping the MLI. This scheme has worked very well in subsequent assembly of the interconnect region. In this paper, we are going to present the new design scheme. We will also compare this design with the original design and present its advantages.

INTRODUCTION

The objective of the MLI system in the interconnect region is to limit heat leak from thermal radiation and residual gas conduction to the level specified by the design criteria. The MLI must maintain this level for 20 plus years lifetime of the SSC. Essential to meeting design requirements is an insulation system design that addresses transient conditions through high layer density for improved gas conduction shielding, having also enough mass and heat capacity to restrict the effect of thermal transients. At the same time, materials suitable for use in a high radiation environment must be considered. The insulation system must have a mean apparent thermal conductivity of 0.76×10^{-6} W/cm-K in order to meet the design heat load budget. This is achieved by using an MLI system comprised of reflective layers of double aluminized Mylar (DAM) separated by layers of spunbonded polyester (Reemay). The reflective layer consists of flat polyester film (polyethylene tere phtalate PET) aluminized on both sides to a nominal thickness not less than 350 Å. The spacer material consists of randomly-oriented spunbonded polyester fiber mats. The mean apparent thermal conductivity of an MLI comprised of these materials has been measured to be 0.52×10^{-6} W/cm -K.[1-2]

* Operated by the Universities Research Association, Inc., for the U. S. Department of Energy under Contract No. DE-AC35-89ER40486.

The MLI system for the ASST 80 K thermal shield consists of two 32 reflective layer blanket assemblies, for a total of 64 reflective layers. The reflective layers are separated by a single layer of Reemay spunbonded polyester. The blankets are designated as the inner 80 K and the outer 80 K blanket, respectively.

The MLI system for the ASST 20 K thermal shield consists of 10 layers of double aluminized Mylar (DAM), each separated by 3 layers of Reemay spunbonded polyester.

DESIGN ANALYSIS

For the ASST dipole the MLI blankets were fabricated using a large diameter winding apparatus.[3] Using this 18 ft diameter apparatus for winding blankets, we are going to get extra material in successive layers in the length and width directions to aid thermal contraction. The first layer of MLI will have the following length:

$$18\ [\text{feet}] \times 12\ [\text{inches}] \times \pi = 678.58\ [\text{inches}].$$

In order to calculate the length of the last layer of MLI we have to consider the fact that the diameter of the winding apparatus will be increased by the thickness of the MLI. Thus the diameter for the 80 K blanket will be:

$$18\ [\text{feet}] + 2 \times 5/8\ [\text{inches}] = 217.25\ [\text{inches}].$$

The diameter for a 20 K blanket will be calculated as follows:

$$18\ [\text{feet}] + 2 \times 1/4\ [\text{inches}] = 216.5\ [\text{inches}].$$

The length of the last layer of MLI will be:

$$217.25\ [\text{inches}] \times \pi = 682.51\ [\text{inches}] \text{ for 80 K blanket,}$$

$$216.50\ [\text{inches}] \times \pi = 680.15\ [\text{inches}] \text{for 20 K blanket.}$$

In order to calculate the extra material due to the increase of the MLI thickness (occurring during winding) we have to divide the maximum diameter of the 80 K MLI by the minimum diameter of the 80 K MLI. We do the same for the 20 K MLI.

$$682.51 / 678.58 = 1.0057 \text{ for the 80 K MLI,}$$

$$680.15 / 678.58 = 1.0023 \text{ for the 20 K MLI.}$$

These numbers show that there is a reserve of 5.7 Mils per inch for thermal contraction for the 80 K MLI and 2.3 Mils per inch for the 20 K MLI.

The distance between two supports posts in a dipole magnet is 125 inches. In order to provide extra material for contraction, the distance between the centers of the holes cut out in the MLI blankets for the posts will be 126.5 inches. From here we are going to get another reserve for thermal contraction.

$$126.5\ [\text{inches}] / 125\ [\text{inches}] = 1.012.$$

The reserve is 12 Mils per inch for 80 K and also 12 Mils per inch for 20 K. Adding these two numbers gives 17.7 Mils per inch for the 80 K MLI and 14.7 Mils per inch for the 20 K MLI. We are now considering the thermal contraction reserve that occurs at a dipole magnet with 80 K MLI equal to 593 inches length and 20 K MLI equal to 595 inches length.

$$593\ [\text{inches}] \times 17.7\ [\text{Mils / inch}] = 10.49\ [\text{inches}] \text{ for 80 K blanket,}$$

$$595\ [\text{inches}] \times 17.7\ [\text{Mils / inch}] = 8.75\ [\text{inches}] \text{ for 20 K blanket.}$$

The thermal expansion coefficient for PET (Mylar)[4] is $6.5 \times 10^{-5}\ K^{-1}$.

Next we try to calculate the thermal contraction considering that the above number is a real number for the MLI (in reality the MLI is composed of PET and Reemay). Also let us consider the worst case: a connection between two dipole magnets with an interconnect region with a length of 55 inches for 80 K and 53 inches for 20 K blankets. The formula for thermal contraction is:

Thermal contraction = $\alpha \times l \times \delta T$, where: α = coefficient of thermal expansion,

δT = change in temperature,

l = length.

The contraction for the 80 K MLI is :

$$6.5 \times 10^{-5}\ K^{-1} \times (593 + 27.5) \times 220\ K = 8.87\ [\text{inches}].$$

The contraction for the 20 K MLI is :

$$6.5 \times 10^{-5}\ K^{-1} \times (595 + 26.5) \times 280\ K = 11.3[\text{inches}].$$

SUMMARY

As we can see the thermal contraction calculated exceeds the reserve provided for the 20 K MLI. For this reason providing extra material for the contraction in the interconnect region for both the 80 K and 20 K blankets has been considered. Besides this consideration the coefficient of the thermal contraction used in the calculations covered only the double aluminized Mylar (DAM). No coefficient of thermal expansion for Reemay spunbonded polyester, the second component of MLI, could be found.

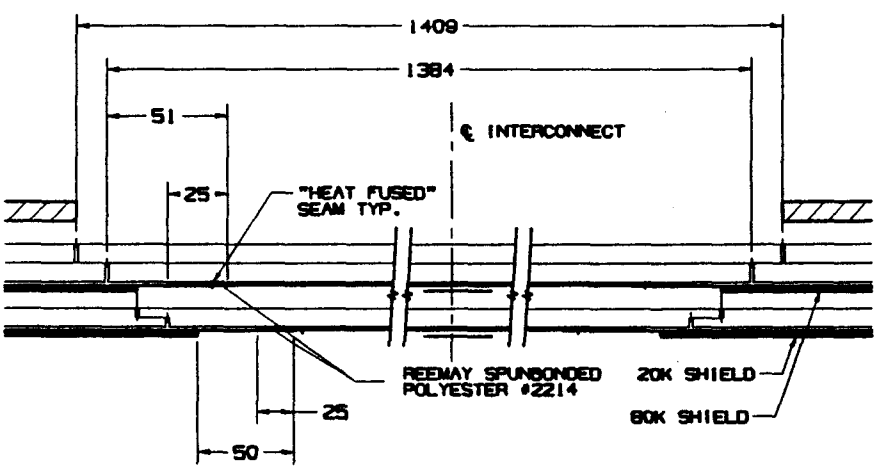

Figure 1. Interconnect region MLI bridges (The old concept using ultrasonic welding).

In Figure 1 the first concept of the interconnect MLI bridges is shown. In this design we try to compress the MLI. We did not succeed in compressing the MLI and we had to change the conceptual design. The MLI bridge is now split and overlapped. In the first conceptual design we used an ultrasonic welding machine in order to connect magnet MLI with bridge MLI. This ultrasonic welding fuses a heavy-duty cover layer, made from the same material as the spacer (Reemay spunbonded polyester), but five times thicker. This connection can be seen in Figure 1. In the new conceptual design, the connection between magnet MLI and bridge MLI is realized with aluminized tape. With this new scheme the installation of the ASST components is much easier and less expensive. The new conceptual design is shown in Figure 2.

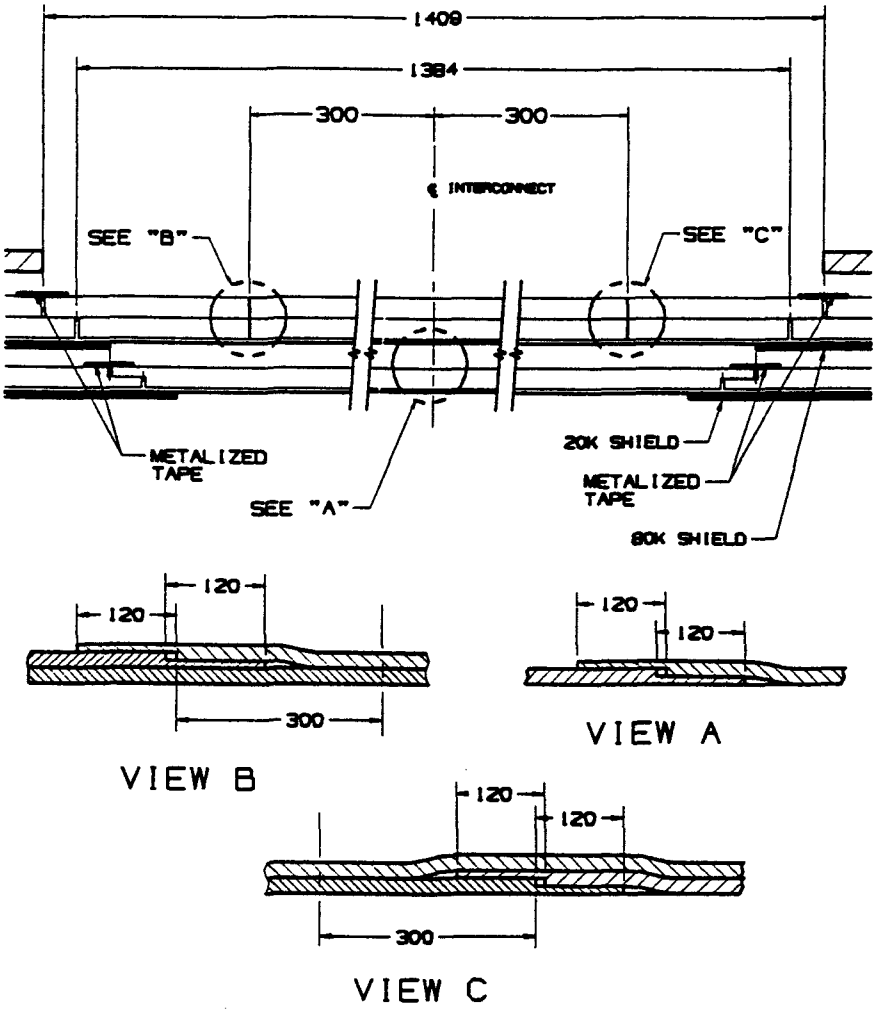

Figure 2. Interconnect region MLI bridges (The new concept with MLI split and overlapped).

REFERENCE

1. W. N. Boroski, J. D. Gonczy and R. C. Nieman, "Thermal Performance Measurement of a 100 Percent Polyester MLI System for the Superconducting Super Collider Part 1: Instrumentation and Experimental Preparation (300K–80 K)," Advance in Cryogenic Engineering, Vol. 35, Plenum Press, New York, 1990, pp. 487–496.
2. W. N. Boroski, J. D. Gonczy and R. C. Nieman, "Thermal Performance Measurement of a 100 Percent Polyester MLI System for the Superconducting Super Collider Part 1: Instrumentation and Experimental Preparation (300K–80 K)," Advance in Cryogenic Engineering, Vol. 35, Plenum Press, New York, 1990, pp. 497–506.
3. J. D. Gonczy, W. N. Boroski, and R. C. Nieman, Multilayer insulation (MLI) in the Superconducting Supercollider – a practical engineering approach to physical parameters governing MLI Thermal performances.
4. U. S. Department of Commerce, Frederick B. Dent, Secretary National Bureau of Standards, Richard W. Roberts, Director Issued September 1973: "A compilation and Evaluation of Mechanical, Thermal, and Electrical Properties of Selected Polymers."