SSCL-Preprint-277 Erratum

SSCL-Preprint-277 Erratum
May 1993
Distribution Category: 414

K. Leung
Q. Shu
G. Snitchler
K. Yu
J. Zbasnik

Effective Stress of a 4.2 K Beam Tube in a Quenching Collider 50 mm Dipole Magnet for the SSC

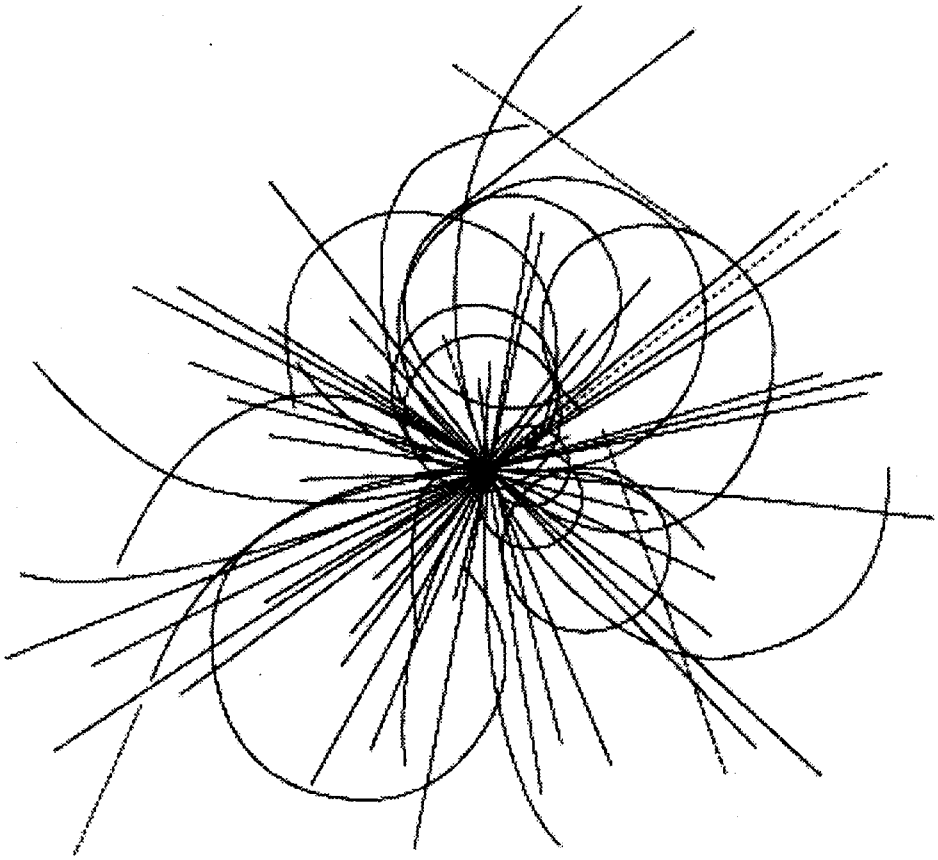

Superconducting Super Collider Laboratory

To be published in *Supercollider 5*

SSCL-Preprint-277 Erratum

Effective Stress of a 4.2 K Beam Tube in a Quenching Collider 50 mm Dipole Magnet for the SSC*

K. Leung, Q. Shu, G. Snitchler, K. Yu, and J. Zbasnik

Superconducting Super Collider Laboratory†
2550 Beckleymeade Ave.
Dallas, TX 75237

May 1993

*Presented at the Fifth Annual International Symposium on the Super Collider, May 6–8, 1993 San Francisco, CA.
†Operated by the Universities Research Association, Inc., for the U.S. Department of Energy under Contract No. DE-AC35-89ER40486.

EFFECTIVE STRESS OF A 4.2 K BEAM TUBE IN A QUENCHING COLLIDER 50 mm DIPOLE MAGNET FOR THE SSC

K. K. Leung, Q. S. Shu, G. Snitchler, K. Yu, and J. Zbasnik

Magnet Systems Division
Superconducting Super Collider Laboratory*
2550 Beckleymeade Ave.
Dallas, TX 75237-3997

INTRODUCTION

Two mechanical design requirements are defined for the SSC Collider beam tube.[1] First, the vacuum requirement (luminosity lifetime=150 hrs). It requires the design of a pressure boundary within the cold mass vessel to provide a vacuum tunnel for the proton beam and to minimize the synchrotron radiation gas desorbtion with a suitable material. The Collider beam tube design is under an intensive activity to search for a material that will meet the luminosity requirement without a distributed pump or liner.[1] Second is the tube wall's resistivity requirement (σ*t = 2E5 Ω^{-1}). For a 4.2 K beam tube,[1] the Cu thickness is 100 μm (RRR=30,6.7 T, σ=2E9$\Omega^{-1}m^{-1}$). The copper yield strength is relatively low in comparison to steel and, therefore, the design of the steel layer is governed by the copper layer yield stress limit. A beam tube subjected to eddy current load in a quenching dipole requires an optimum diameter design to provide maximum aperture and adequate cooling space for the liquid Helium flow to cool the beam tube. This paper presents a mechanical design procedure using an established finite element analysis and modelling method[2] to produce a design with safety, matching the dipole cold mass vessel as designed by the ASME[3] code, and to generate a steel tube wall thickness to ensure the copper coating stress below the yield stress limit in a quenching dipole.

DESIGN CONSIDERATIONS

The SSC beam tube subjected to eddy current force[4,5,6] is designed as two-shell laminate. Material selection maximizes the vacuum and cooling space with acceptable structural safety and vacuum compatibility. Nitronic-40 steel is selected as the outer layer for its structural strength in cryogenic environment, non-magnetic properties and a close thermal expansion match to the copper layer.

*Operated by the Universities Research Association, Inc., for the U.S. Department of Energy under Contract No. DE-AC35-89ER40486.

The steel layer is designed to withstand the thermal and eddy current loads as well as the external pressure from the vaporized liquid Helium. Copper is selected as the inner layer of the beam tube for low electrical resistivity. It minimizes power loss from the image currents induced by the circulating protons on the wall of the beam tube. The copper must also retain high surface finish to shorten the path of the high frequency image current and reduce power loss.

OBJECTIVE OF THE BEAM TUBE EFFECTIVE STRESS ANALYSIS

Effective stress analysis helps produce a high quality design that enhances the magnet cold mass vessel reliability. Beam tube stress in a quenching dipole involves dynamic, magnetic, thermal, and structural loading on non-linear material. The Safety factor of the ASME SEC.VIII, DIV. 1 is employed for the beam tube design. SSC test data is used in computing the beam tube stress including, for example, the magnetic field strength and its rate of change with respect to time in a quenching dipole, and the dynamic amplification factor for the duration and shape of the transient eddy current pressure. The use of "stress ratios," the non dimensional coefficients denoting the fraction of the allowable stress (including the buckling strength by ASME code) for the combined loadings help qualify the beam tube design. Design of the beam tube is determined by its structural integrity, but more importantly to sustain the high surface finish of the copper layer and to ensure the copper stresses within the elastic limit during quench. Predicting the service life of the beam tube with plastic stress in copper layer is a complicated process. Post yield copper layer stress analysis needed information of the cold work substantiated by tests and, therefore, is not considered in the present analysis.

DESIGN LOADINGS, STRESS RATIOS AND ALLOWABLE STRESS

The beam tube loadings except the external buckling load are not included in ASME code[2] (UG-22). Use of ASME U-2 (g) and stress analysis by the finite element method for the following loads on non-linear material are proposed: (a) eddy current and quench helium external pressure, (b) eddy current torque or eddy current lateral bending force, (c) cooldown thermal load on the bimetallic tube, and (d) axial load induced by temperature rise of the beam tube heating by the coils can be reduced with a bellow. The beam tube's high ratio of length to radius of gyration ($l/\gamma>200$) produces zero axial structural capacity. Beam tube stresses are calculated under loadings (a), (b), (c). Stress ratios are applied to qualify the beam tube design.The sum of the stress ratio is directed to be near 1.0 for a minimum tube wall thickness design. Yield strength of the Nitronic-40 at 4 K is 1185 MPa (172 ksi). The allowable tensile is established as 172/4= 43 ksi using the ASME factor. For allowable buckling stress, no general theory exists which will apply in all cases. A 46.5-mm OD beam tube with 2-mm N-40 steel wall is calculated to have 131 MPa (19 ksi) allowable buckling stress from ASME UCS-28.3.

EDDY CURRENT PRESSURE EVALUATION

(A) The static equatorial eddy current pressure (see Figures 1 and 2) may be evaluated by finite element codes such ANSYS or EMAS . Code calculated pressure by SSC indicates that the following closed form equation[4] is conservative for beam tube design.

$$P_{Lmax} = B * (dB / dT) * b * t * \sigma$$

P_{Lmax}	= equatorial eddy current pressure.
B	= dipole field strength. (SSC test data[7] see Figure 3)
dB/dt	= field strength change at quench. (SSC test data,[7] see Figure 3)
b	= the "mean" radius of the copper layer.
t	= the layer thickness of the copper.
σ	= the copper electrical conductivity depends on RRR ratio, temperature, magnetic flux density and cold-worked condition.

For a 4.2 K beam tube with ID= 42.3 mm and copper layer = 100 microns. The calculated pressure is 93 psi with its distribution shown in Figure 2.

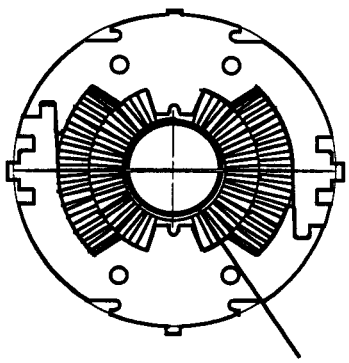

Figure 1. Beam Tube in Dipole.

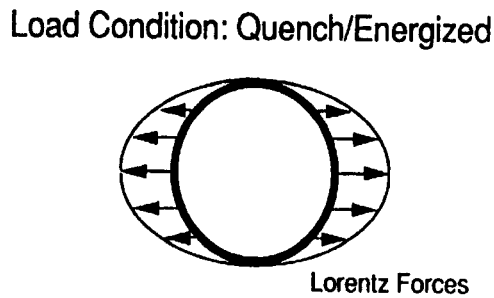

Figure 2. Eddy Current Pressure.

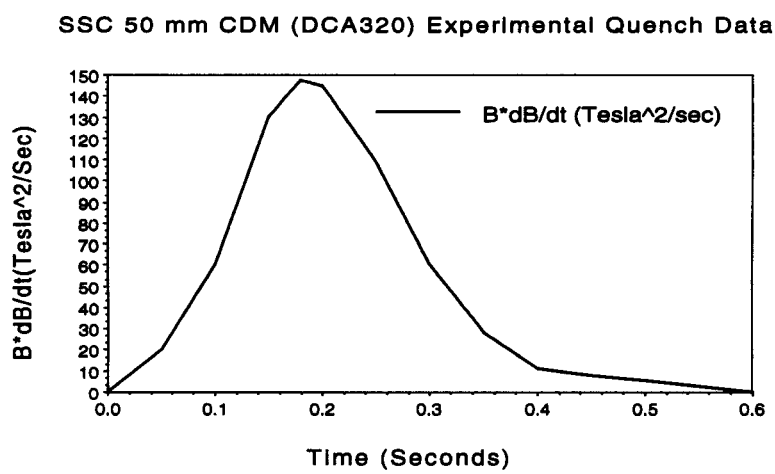

Figure 3. Dipole Field Strength at Quench.[7]

Considering eddy current load on copper[1] RRR=30 The equatorial static eddy current pressure (max. Lorentz pressure) equation is given as

P_{Lmax} = B * (dB / dT) * b* t * σ = * B(tesla) * dB/dT (tesla/sec) *b (m) *t (m) *σ (Ω-1* m-1) (MPa).

Where T= 0.18 sec., B = 6.01 (tesla), dB/dT= 24.52 (tesla/sec)
B*dB/dT= 147.26 T^2/sec,
r = 0.02115 (m),
b = 0.0217
t =1.0-4 m
$\sigma^{1}_{(6.7,\,4.2))}$= 2E9 x ($\Omega$m) $^{-1}$

P_{Lmax} = 1.45E-4 *147.26 T^2/sec* 0.0217 (m)* 1.E-4 (m)
2 E9 (Ω-1*m -1) = 0.64 MPa (93 psi)

STRESS ANALYSIS FOR A 42.3 MM ID COLLIDER DIPOLE MAGNET (CDM) BEAM TUBE WITH 2.0 mm STEEL WALL AND 0.1 mm COPPER LAYER

A sample calculation is included for the proposed SSC CDM beam tube. The CDM beam tube is subjected to the largest eddy current force and its thickness represents a conservative design for all other SSC mgnet systems. The design data for the CDM beam tube design is summarized as follows:

(1) L. He. Pressure = 2 MPa = 290 psi at 0.20 seconds, SSCMSD specification
(2) The static eddy current pressure is 0.64 MPa (93 psi) at 0.18 seconds
(3) Beam tube buckling stress from L. He. = 290*46.5 / (2*2) = 23.2 MPa (3.37 ksi). The Stress ratio = 3.37 / 19 (ASME Code Allowable) = 0.17737
(4) Eddy current and cool down stress = 19.45 ksi (From 3D model FEM analysis). The stress ratio = 19.45 / 43 (ASME Code safety factor included)) = 0.463
(5) Estimated maximum non-axisymmetrical eddy current pressure = 20 psi,[6] and the tube bending stress is = 28.9 MPa (4.2 ksi). The stress ratio = 4.2/43 (ASME Code safety factor included) = 0.1
(6) The total stress ratio = 0.17737 + 0.463 + 0.1 = 0.74 < 1.0 and is acceptable
(7) The combined copper stress is 34.5 MPa (5.02[8] ksi) <44 MPa (6.4 ksi) yield
(8) The dynamic factor is estimated as 1.1 to 1.3 and is not included in this analysis.

CONCLUSIONS AND DISCUSSIONS

A beam tube with 100 μm copper (RRR-30) bonded to a 2.0 mm layer of stainless steel (Nitronic-40) fulfills the structural requirement based on the SSC Magnet System Division quench pressure specification.[8,9] Reduction of the steel wall thickness is possible because test data[7,8] indicating that the helium pressure is less than the specification limit. Designing a beam tube with a minimum wall should be governed by the copper yield stress limit. Designing the copper for post-yield strength is not acceptable because of the development of micro-cracking in the copper. A bellow is required to reduce the beam tube axial stress.The high slenderness ratio of the beam tube (l/γ>200) practically has no axial load capacity. The non-axisymmetrical eddy current loads need to be considered in the bellow and the end joints design. The present beam tube analysis is performed on a 3-D finite element model in a non-linear stress analysis including non-linear material properties and "beam-column" effect. We learn from this analysis that a 2D linear stress analysis produces unacceptable erroneous copper layer stress.

REFERENCES

1. W. C. Turner. "Collider Beam Tube Vacuum," Presentation at SSCL, March 1983.
2. K. K. Leung. "Seismic Stress of Heat Exchanger Supporting Structures," 3rd International Conference on Structural Mechanics in Reactor Technology, London, 1975.
3. American Society of Mechanical Engineers. "ASME Code Sec. VIII, Div. 1," 1992.
4. A. Chao. "More on Copper Coating Considerations," Report, SSC-N-434.
5. K. Y. Ng, et al., "Allowable Stress in The SSC Beam Tube During A Quench," SSCL Report, SSC-168, 1988.
6. K. K. Leung. "Non-axisymmetrical Eddy Current Loads on Beam Tube in Quenching Dipole Magnet," SSCL Report, MD-TA-243.
7. Q. S. Shu. "Status of Tests on RF Surface & Magneto-Resistance," SSC Meeting, March 1993.
8. K. K. Leung. "Design of the SSC Collider 4.2 K Beam Tube," SSC Meeting, March 1993.
9. SSCL Specification, "Doc. No.: M80-000001 Rev: A, Magnet System Specification," SSCL, Jan. 1992.