SSCL-Preprint-275

SSCL-Preprint-275
April 1993
Distribution Category: 414

Design of a Model Dipole Magnet for the SSC High Energy Booster

N. Hassan
K. Couzens
S. Dwyer
A. Jaisle
R. Jayakumar
S. Krishnamurthy
R. Mihelic
S. Phillips
R. Puri
K. Sarna
G. Snitchler
V. Venkatraman

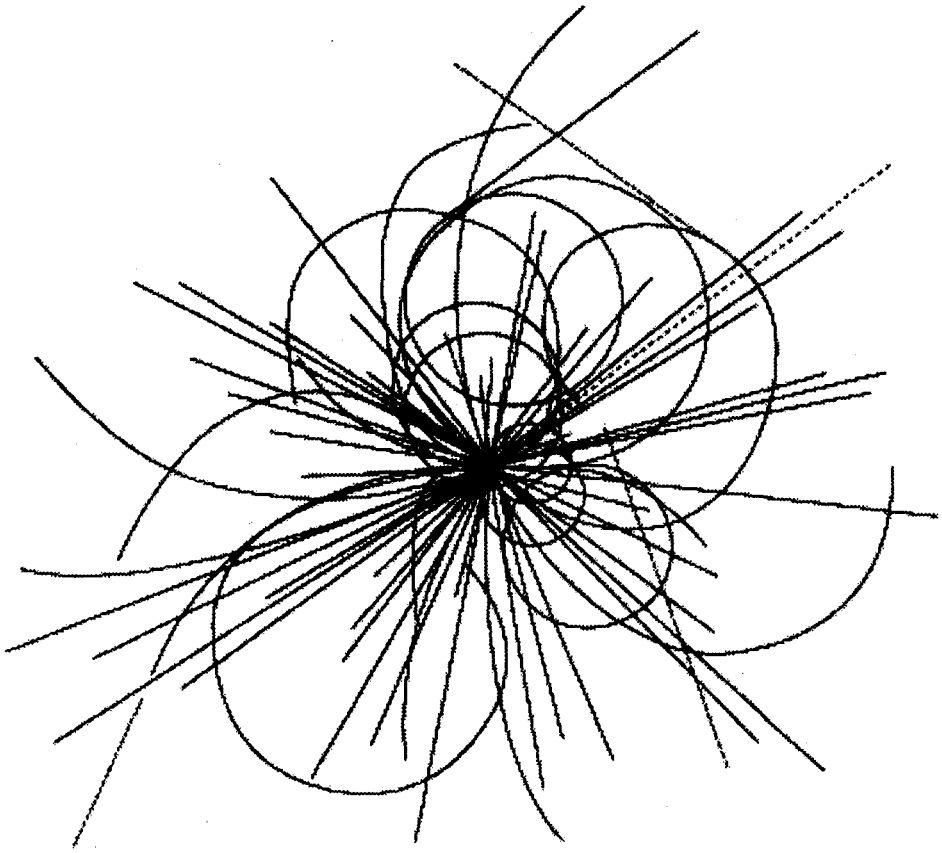

Superconducting Super Collider Laboratory

To be published in *Supercollider 5*

SSCL-Preprint-275

Design of a Model Dipole Magnet for the SSC High Energy Booster*

N. Hassan, K. Couzens, S. Dwyer, A. Jaisle, R. Jayakumar,
S. Krishnamurthy, R. Mihelic, S. Phillips, R. Puri,
K. Sarna, G. Snitchler, and V. Venkatraman

Superconducting Super Collider Laboratory†
2550 Beckleymeade Ave.
Dallas, TX 75237

April 1993

*Presented at the Fifth Annual International Symposium on the Super Collider, May 6–8, 1993 San Francisco, CA.
†Operated by the Universities Research Association, Inc., for the U.S. Department of Energy under Contract No. DE-AC35-89ER40486.

Table 1. Major parameters of HEB model dipole magnet cross section.

Current	6.63 kA	Inner Layer	–
Central Field	6.67 T	Number of turns	19
Non-Linearity	2.07 %	Conductor blocks	5, 7, 5, 2
Margin	13.3 %	Number of strands	30
Operating Temperature	4.25 K	Wire diameter	0.81 mm
Coil Inner Diameter	49.7 mm	Cu/Sc ratio	1.3
Coil Outer Diameter	99.97 mm	Pole angle	76.1 °
Intercoil Spacing	0.47 mm	Outer Layer	–
Collar Width	19 mm	Number of turns	26
Yoke Inner Diameter	140.40 mm	Conductor blocks	15, 11
Yoke Outer Diameter	330.10 mm	Number of strands	36
Cold Mass Diameter	340.00 mm	Wire diameter	0.65 mm
Coil End-to-End Length	1678 mm	Cu/Sc ratio	1.8
Coil Straight Length	1350 mm	Pole angle	44.5 °
Cold Mass Length	1.8 m	NbTi Filament Diameter	6 μm

Table 2. HEB model dipole magnet field quality terms expressed in units of 10^{-4} of the main field evaluated at a radius of 1 cm from the center.

Multipole	b_2	b_4	b_6	b_8
Specification	0 ± 0.8	0 ± 0.08	0 ± 0.013	0 ± 0.01
Optimized	0.000	0.000	0.004	0.002

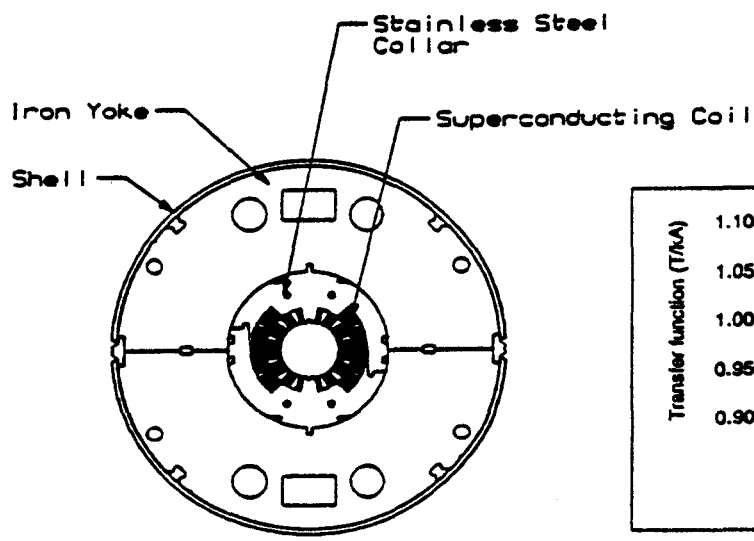

Figure 1. HEB model dipole magnet cross section.

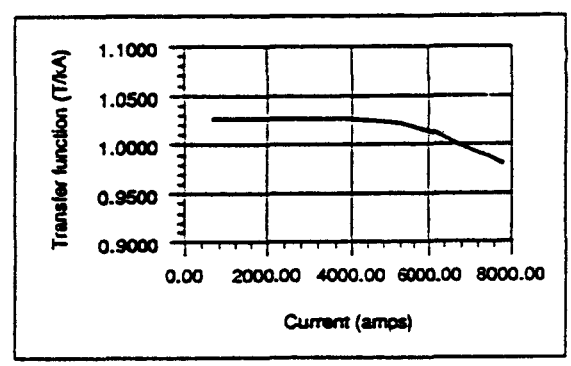

Figure 2. HEB model dipole.magnet transfer vs. current.

MECHANICAL DESIGN

In this section, design of various components of the cold mass is described. The coil assembly consists of two layers. The superconducting cable is insulated with 0.03 mm thick Kapton®,[3] film with 50 % overlap configuration. The insulated cable is then wrapped with 0.11 mm thick fiberglass tape impregnated with B-stage epoxy. The same configuration is used for insulating and wrapping of the copper wedges. BEND,[4] TOSCA,[5] and ENDS3D[6] codes were used to determine the optimum design for the coil ends. The "grouped end" configuration was selected for coil end design. G-11 CR

design for the coil ends. The "grouped end" configuration was selected for coil end design. G-11 CR is the selected material for the coil end parts. Unlike the BNL and FNAL dipole magnets, in which the inner and outer coils are wound and cured separately, the outer coil in the HEB model dipole is wound on the already cured inner coil. This process offers several advantages, the most important of which involves the internal ramp splice[7] designed for the HEB model dipole. With two separately wound coils, as it is done in other SSC dipoles, the splice is made after the coils are assembled together. Making the ramp splice on "separate wound" coils requires breaking the bond between the splice lead and the adjacent turns. That portion of these splice leads which is not contained in the splice housing has to be epoxied back onto the adjacent turns. This is a time consuming operation with potential reliability problems. With the "wind on coil" technique, the lead of the outer cable is soldered to the lead of the cured inner coil prior to winding of the outer coil. This is a simple and quick process. Perhaps, the most important advantage of the "wind on coil" technique is that as the first turn of the outer coil is wound, the splice will be tensioned and will be cured with the outer coil in a tensioned condition. This is considered to be an improvement with regard to ramp splice mechanics, particularly for magnets which have to withstand high ramp rates. Furthermore, the "wind on coil" method allows curing the coil end keys/ramp splice housing with the coil and the ramp. This allows the splice and the ramp to perfectly conform to their mating parts. Using the inner coil as the winding mandrel also allows outer coil to conform to the inner during the curing process. The "wind on coil" approach requires using a spacer between the inner and outer coils. The spacer produces a needed smooth and rigid surface for winding the outer coil. The rigid spacer between the coils offers flexibility to electromagnetic design by eliminating quench concerns with regard to locating the pole of the outer coil on an inner coil turn, instead of an inner coil wedge. The spacer creates a barrier which separates the inner coil conductor from the outer coil pole shim and collar interface. It also provides for a more rigid coil structure as it is bonded to the outer coil during the curing cycle. Another advantage of this winding technique is the cost savings of a die for outer mandrel lamination. Calculations have indicated that the interlayer spacing in the HEB dipole does not adversely effect transfer of heat between the coil layers.[8] Among disadvantages of this coil winding technique are the added cost of the spacer and the slightly more complex ground insulation configuration. The "wind on coil" technique puts the inner coil through two curing cycles, which may increase AC losses. The second cure cycle changes the inner coil size also, resulting in a slight increase in modulus of elasticity of the inner coil. Since the soldered splice between the inner and outer coils will be exposed to high temperatures with the outer coil curing cycle, "silver solder" is selected for joining the coil leads to avoid solder softening and loss of splice tension. In the HEB model dipole several layers of 0.13 mm thick Kapton are used to completely insulate the coils from the collars. A radial space of 0.15 mm is included for installing quench protection heaters that will be needed in full size prototypes of this design. Both the collaring shims and the 0.50 mm thick collaring shoe are made of brass. The collaring shims were designed to clip onto the collars for ease of assembly. The collaring shoe is used to avoid tearing of the ground insulation during collaring, and extrusion of the insulation into the voids of the collar assemblies. A beam tube design was not necessary for the model magnet since it will be cold tested under pool boiling conditions.

Mechanical behavior of the cold mass components and assemblies at various stages such as after collaring, shell welding, cooldown, and excitation were analyzed using ANSYS®,[8,9,10]. Results of the performed structural analysis are presented in Table 3. Design of the 1.5-mm thick collar laminations for the HEB dipole provides an option to make these laminations from Nitronic-40 or high manganese stainless steel. The intent of the program was to build two magnets at the SSC, using Nitronic-40 in one and high manganese in the other. The objective was to evaluate the performance of both materials for use in the future magnets. It is thought that high manganese steel may be more desirable due to its lower coefficient of thermal expansion. The low coefficient of thermal expansion of this material will maintain the collar-yoke contact at 4.3 K and helps to minimize the possibility of premature quenches due to loss of collar-yoke contact. The collar-yoke interface for the HEB dipole has been designed for a line-to-line fit. These collars are circular, i.e., not "antiovalized".[8] This configuration also helps to maintain a vertical collar-yoke contact with cooldown to 4.3 K. The collar laminations are spot welded in left-handed and right-handed pairs to avoid coil twist during assembly. The collar laminations are assembled in packs using swaged tubes and are interlocked using phosphor bronze keys.

Table 3. Structural analysis results for HEB model dipole magnet.

Condition	Inner / Outer Coil Azimuthal Stress (Mpa)	Vertical / Horizontal Collar Deflection (mm)	Yoke Mid-Plane Gap (mm)
After Collaring	69.7 / 54.8	0.10 / -0.03	—
After Shell Welding	85.9 / 68.0	0.06 / 0.007	0.04
After Cooldown	56.5 / 51.20	0.05 / 0.03	0.00
At 6500 A	23.1 / 28.0	0.03 / 0.06	0.00

The HEB model dipole uses horizontally-split yoke laminations made of 6.35 mm thick low carbon steel for the middle and 3.2 mm thick stainless steel for the coil ends. The smoother lamination edge produced in fineblanking is intended to reduce friction at the collar-yoke-shell interfaces and eliminate the "ratcheting" effect observed in BNL dipole magnets.[8] This is an important consideration since these parts shrink at different rates with cooldown. Use of thick laminations on the ends is also intended to eliminate the need to epoxy them in order to avoid buckling under press and welding loads. The iron yoke laminations are coated with manganese phosphate which acts as a rust inhibitor and provides an electrically resistive barrier between adjacent laminations, reducing losses due to yoke eddy currents. The half shells and end plates for the HEB dipole are made of 304 stainless steel. The shell behavior under magnetic, thermal, and mechanical stresses was also analyzed using ANSYS. The cold mass end plates contain the axial force developed with magnet excitation and are welded to the half shells during assembly.

ACKNOWLEDGEMENTS

The authors would like to express their appreciation to B. Archer, A. Fluhmann, Y. Chen, F. Nobrega, D. Orrell, S. Smith, and E. Vrsansky of SSC Laboratory and G. Spigo of CERN for their valuable suggestions and support throughout the design effort.

REFERENCES

1. B. Archer, D. Orrell, and G. Snitchler, SSCMAG users manual, MD-ENG-92-A-005, (1992).
2. PE2D is trademark of Vector Fields, Inc., Oxford, England.
3. Kapton is a registered trademark of DuPont, Inc.
4. J. M. Cook, An application of differential geometry to SSC magnet end winding, SSCL-N-720, (1990).
5. TOSCA is trademark of Vector Fields, Inc., Oxford, England.
6. ENDS3D, Lilly, D. Orrell, G. Snitchler, private communication.
7. N. Hassan and R. Jayakumar, A trade study of using cured inner coil as a mandrel for winding outer coil, (1992).
8. N. Hassan, Design of SSC high energy booster model dipole magnet, (1993).
9. Y. Chen, Mechanical analysis of DSB cross section, (1992).
10. ANSYS is trademark of Swanson Associates, Inc., Houston, PA.