SSCL-Preprint-264

SSCL-Preprint-264
April 1993
Distribution Category: 414

K. Jones

Low Energy Booster Radio Frequency Cavity Structural Analysis

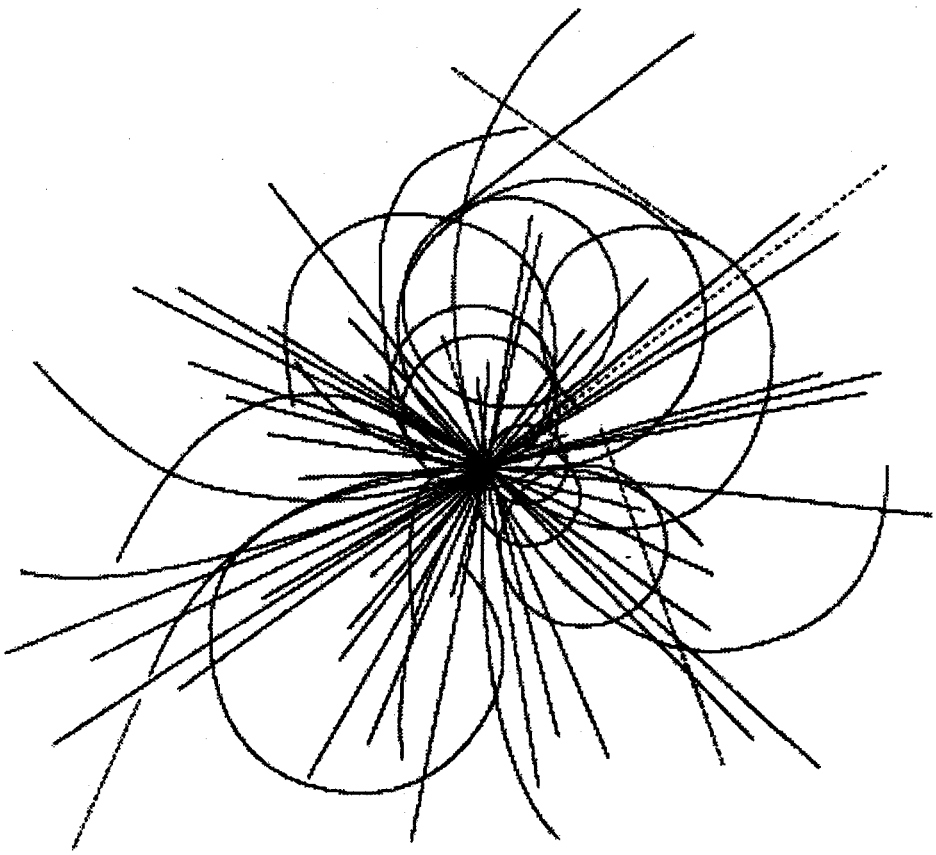

Superconducting Super Collider Laboratory

To be published in *Supercollider 5*

SSCL-Preprint-264

Low Energy Booster Radio Frequency Cavity Structural Analysis*

K. Jones

Superconducting Super Collider Laboratory†
2550 Beckleymeade Ave.
Dallas, TX 75237

April 1993

*Presented at the Fifth Annual International Symposium on the Super Collider, May 6–8, 1993 San Francisco, CA.
†Operated by the Universities Research Association, Inc., for the U.S. Department of Energy under Contract No. DE-AC35-89ER40486.

LOW ENERGY BOOSTER RADIO FREQUENCY CAVITY STRUCTURAL ANALYSIS

Kennedy Jones

Mechanical Engineering Department
Accelerator Systems Division
Superconducting Super Collider Laboratory*
2550 Beckleymeade Avenue, MS 4006
Dallas, TX 75237-3997

ABSTRACT

The structural design of the Superconducting Super Collider Low Energy Booster (LEB) Radio Frequency (RF) Cavity is very unique. The cavity is made of three different materials which all contribute to its structural strength while at the same time providing a good medium for magnetic properties. Its outer conductor is made of thin walled stainless steel which is later copper plated to reduce the electrical losses. Its tuner housing is made of a fiber reinforced composite laminate, similar to G10, glued to stainless steel plating. The stainless steel of the tuner is slotted to significantly diminish the magnetically-induced eddy currents. The composite laminate is bonded to the stainless steel to restore the structural strength that was lost in slotting. The composite laminate is also a barrier against leakage of the pressurized internal ferrite coolant fluid. The cavity's inner conductor, made of copper and stainless steel, is subjected to high heat loads and must be liquid cooled.

The requirements of the Cavity are very stringent and driven primarily by deflection, natural frequency and temperature. Therefore, very intricate finite element analysis was used to complement conventional hand analysis in the design of the cavity. Structural testing of the assembled prototype cavity is planned to demonstrate the compliance of the cavity design to all of its requirements.

INTRODUCTION

This paper presents the stress, displacement, dynamic, random vibration, and thermal analysis preformed on the Low Energy Booster (LEB) Radio Frequency (R F) Cavity. The Cavity is unique in that it is constructed of 304 stainless steel, SS, copper, and a fiber reinforced composite laminate (similar to G10).The SS provides structural strength, the copper is for good electrical conductivity, and the composite is to reinforced the SS in the areas where the

SS housing is slotted to reduce eddy currents. The components of the cavity, figure 1, are the tuner housing, ferrite disks, outer conductor, inner conductor, tetrode, higher order mode damper, and ion pump. The tuner housing, outer conductor, and inner conductor are presented in this paper to show that their prescribed design specifications were met. These components were analyzed with ANSYS revision 44a FE software and conventional hand analyses. The following sections discuss the results that were obtained in conducting these analyses.

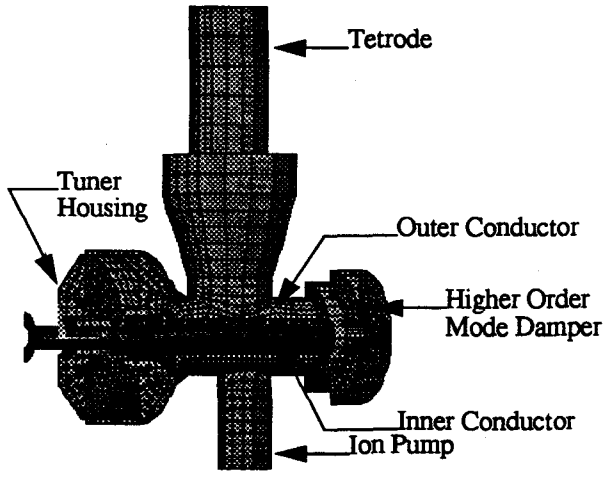

Figure 1. RF Cavity FEM

TUNER HOUSING

The tuner housing serves as a containment vessel for the ferrite and cooling fluid while at the same time providing stiffness for the inner conductor. The tuner has SS fins on both sides, figure 2, which are welded to the SS housing. The surface and perimeter of the

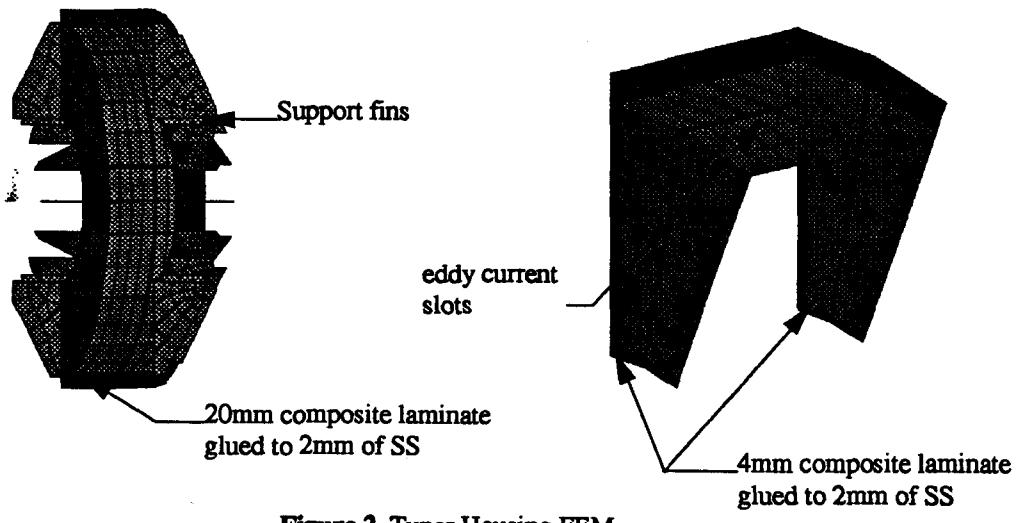

Figure 2. Tuner Housing FEM

housing are slotted to reduce the eddy currents but this also reduces the stiffness. To regain this stiffness a 4-mm composite laminate is glued to the surface and a 20-mm composite laminate is glued to the outer perimeter of the housing. The FEM represents the 20-mm laminate as solid elements layered on plate elements representing the SS housing outer perime-

ter. The surface of the housing is modelled with plate elements having combined properties of SS and a 4-mm laminate of the composite. The major loading on the housing is due to the 875 N weight of the ferrite disks and a 34.5 MPa internal coolant pressure load. The maximum stress levels in the housing are very low with $\sigma_{1\text{-}max}$ less than 7.5 MPa and τ_{max} less than 4.2 MPa. This indicates that there will be low deflection levels in the inner conductor. From hand analysis the maximum stresses in the bolted joints are also less than 20% of the yield stress of 304 SS (205 MPa).

OUTER CONDUCTOR

The outer conductor, figure 3, is made of 8-mm 304 SS with 400 microns of copper plating. It is subjected to structural and thermal loadings. Structurally, it sees a vacuum load and also supports the entire weight of the cavity, including the tetrode and the ion pump. It is also attached to a massive stand by support brackets through which random vibrations are

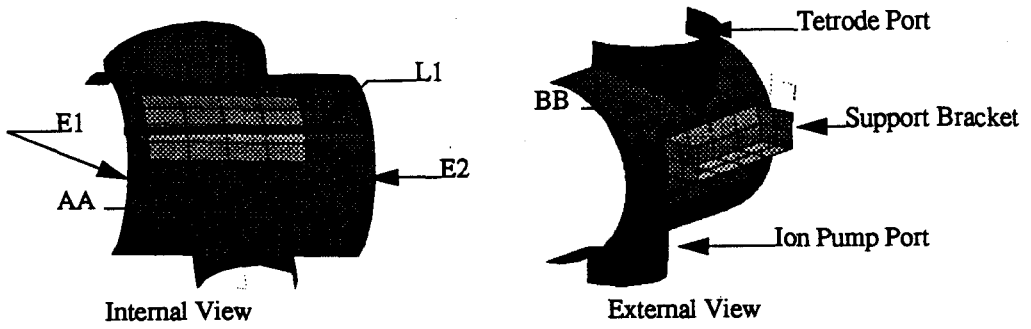

Figure 3. Outer Conductor FEM

introduced. The outer conductor, OC, is copper plated to reduce the RF losses from 3550 watts to 288 watts. Requirements specify that the stress levels in the OC must be less than 136 MPa and the maximum operating temperature be less than 200°C. The thermal boundary conditions are temperatures along the line L1 and at the edges, E1 and E2 are maintained at 45°C. The maximum predicted principle stress due to structural and thermal loading is 81 MPa at point BB. The maximum predicted operating temperature is 126°C at point AA.

INNER CONDUCTOR

The Inner Conductor, figure 4, is the single most important component of the Cavity. It is constructed of a 2-mm copper outer shell brazed to a 2-mm SS inner shell with water

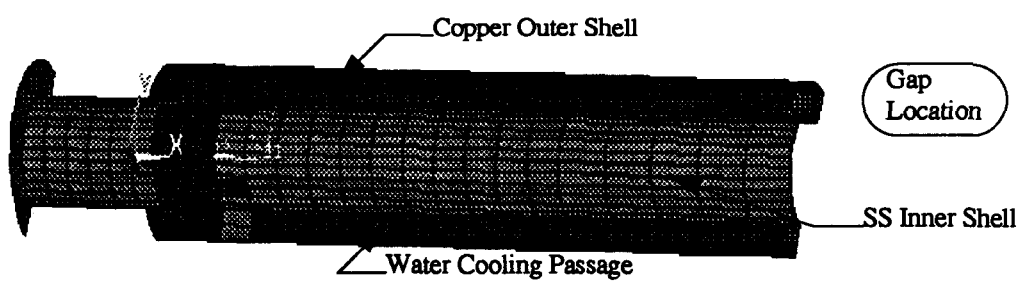

Figure 4. Inner Conductor FEM

cooling channels in between. The maximum allowable static or dynamic vertical deflection at the gap is 25 microns. The maximum allowable static or dynamic horizontal deflection is

also 25 microns. The finite element analysis predicts that the maximum static vertical deflection will be 13 microns and the maximum horizontal deflection will be 19 microns. Once the static analysis was completed a modal analysis was performed to determine if there were any natural frequencies below 100 hz. The first three frequencies were 61 hz, 85 hz, and 123 hz. Since the general requirement specified that all natural frequencies be above 100 hz, it was necessary to perform a random vibration analysis to demonstrate that the excitation of the IC at the gap would be less than 25 microns. The random vibration analysis would allow determination of the mean output displacement generated from random displacements imposed at the support bracket. The input power spectral density, PSD, data that was used in the analysis was obtained from several different laboratory in the United States. The output response of the RF Cavity to this input PSD was a mean frequency, ω_o, of 27 hz and a mean displacement, σ_m, of 0.104 microns. Next a statistical analysis on the probability of the peaks from the output response[1] was done using ω_o, σ_m, and a 25 year time period as input. This yielded a maximum peak response of 1 micron.

CONCLUSION

In conclusion, these analyses demonstrate that the tuner housing, outer conductor, and inner conductor of the LEB RF Cavity will indeed meet and exceed their design requirements. If the components of the Cavity are manufactured within the tolerances called out in the machine drawings and assembled properly, the Cavity should perform structurally and thermally as expected without any problems.

*Operated by the Universities Research Association, Inc., for the U.S. Department of Energy under Contract No. DE-AC35-89ER40486.

REFERENCES

1. M.G. Hallam, N. J. Heaf, L. R. Wootton, "Dynamics of Marine Structures," CIRIA Underwater Engineering Group, Report UR 8, 2nd Edition, pp 57.