SSCL-Preprint-263

SSCL-Preprint-263
April 1993
Distribution Category: 400

S. Mookerjee
W. Shen
B. Yager

Method of Fabricating a Completely Ordered Wound Coil

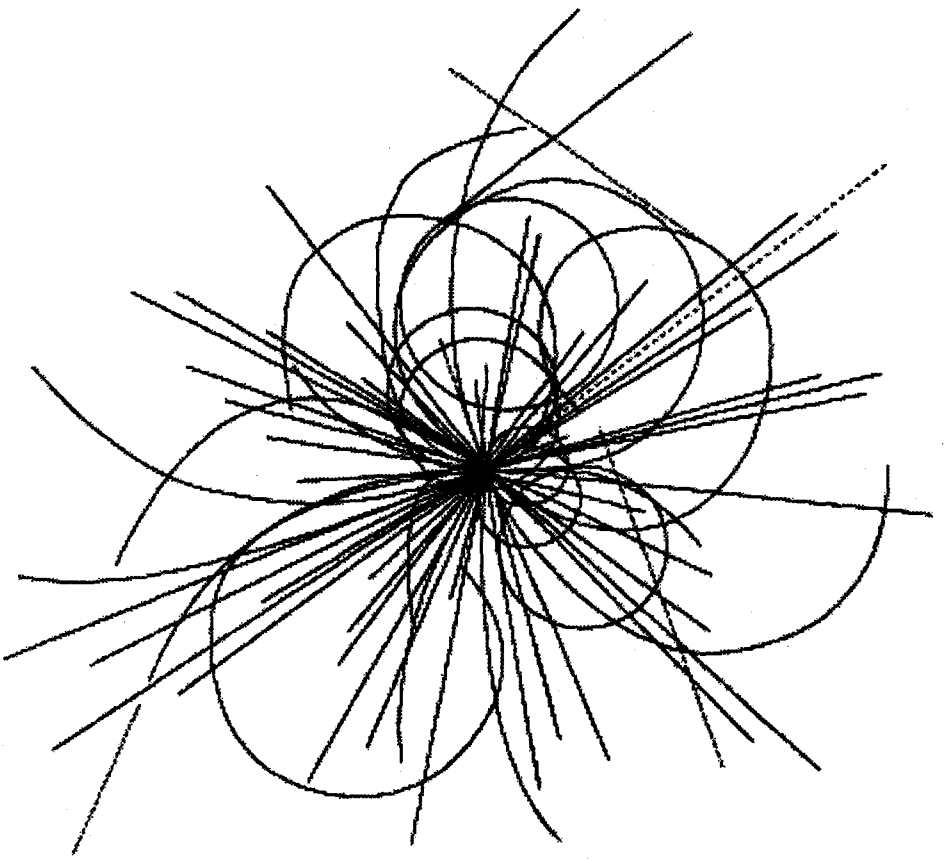

Superconducting Super Collider Laboratory

To be published in *Supercollider 5*

SSCL-Preprint-263

Method of Fabricating a Completely Ordered Wound Coil*

S. Mookerjee, W. Shen, and Yager

Superconducting Super Collider Laboratory†
2550 Beckleymeade Ave.
Dallas, TX 75237

April 1993

*Presented at the Fifth Annual International Symposium on the Super Collider, May 6–8, 1993 San Francisco, CA.
†Operated by the Universities Research Association, Inc., for the U.S. Department of Energy under Contract No. DE-AC35-89ER40486.

METHOD OF FABRICATING A COMPLETELY ORDERED WOUND COIL

S. Mookerjee, W. Shen* and B. Yager

Superconducting Super Collider Laboratory†
2550 Beckleymeade Ave.
Dallas, TX 75237

ABSTRACT

An innovative four step coil winding process is under development at the Superconducting Super Collider Laboratory. This method is to be used for correction coils used in magnets for the HEB and Collider Rings of the SSC. High density, orderly wound coils with good mechanical stability and dimensional control are the end products of this technique.

INTRODUCTION

Approximately 10,000 Superconducting Correction Magnets are required for the HEB and Collider Rings of the Superconducting Super Collider. These magnets serve to fine tune the properties of the particle beam in the accelerators. They must operate at cryogenic temperatures for long periods of time while exposed to high radiation. Relatively low operating currents (< 100 A) and tight space constraints result in magnet designs having coils with high conductor densities. The large number of magnets places a premium on methods that can reliably mass produce coils, each with up to hundreds of turns of small (<20 mil) diameter wire. The SSCL has invented a four step coil production process that involves winding multiple layers of flat racetracks without splices and forming them into their final coil shape. Two curing steps are also employed in the process. The paper describes this "flat and form" coil fabrication process that is under development for making "ordered wound" correction coils.

FABRICATION TECHNIQUE

The flat and form coil winding technique consists of four steps. First, a stack of flat "racetrack" layers are simultaneously wound without splices between the layers (see Figure 1a.). The second step is a curing cycle that bonds the wires in each layer together without bonding the layers together. The third step forms the coil into its final shape and the fourth step is a second cure cycle that bonds the layers into a rigid coil (see Figure 1b).

---

* Present address: Texas Accelerator Center, 4802 Research Forrest Dr., The Woodlands, TX 77381.

† Operated by Univerities Research Association, Inc., for the U.S. Department of Energy, under Contract No. DE-AC35-89ER40486.

For each cure cycle, the coil is supported by the tooling used in the prior step. The method is dependent on the tooling design as well as the use of thermoplastic bonding materials as part of the wire insulation. To date, the wire used has been 15 mil diameter NbTi superconductor (Cu:Sc = 2.4:1). It is insulated with 0.5 mil Kapton film (with a minimum of 50% overlap). The wrapped wire is overcoated with 0.5 mil layer of XMPI, a radiation resistant thermoplastic made by E.I Dupont Nemours Co. This thermoplastic is used as a bonding agent. The thermoplastic characteristics are integral to the bonding process. The following subsections will describe the bonding and fabrication steps in more detail. Brief descriptions of the tooling will also be included.

Step 1: Flat Winding Process

The flat wound uses a parallel plate mandrel. This is a series of thin plates of alter * Present address Texas Accelerator Center, 4802 Research Forrest Dr., The Woddlands TX, 77381 -nating thickness that are sandwiched between two thicker plates (the base plate and the top plate) Half of these thin plates are referred to as the Mandrel Plates. They are approximately the same thickness, if not thicker than the insulated conductor and, looking at an end view, these plates are of increasing width. This is so that when the coil is formed, the flat ends are all flush in height. The desired thickness of the coil (i.e., how many layers of "racetracks") determine the number of mandrel plates required.The other thin plates are the spacer plates. Their function is to separate and add rigid support to the conductor layers. The important characteristic feature of these spacer plates is that they all have a slot cut in one end. This is where the wires make their transition from layer to layer. (see Figure 2)

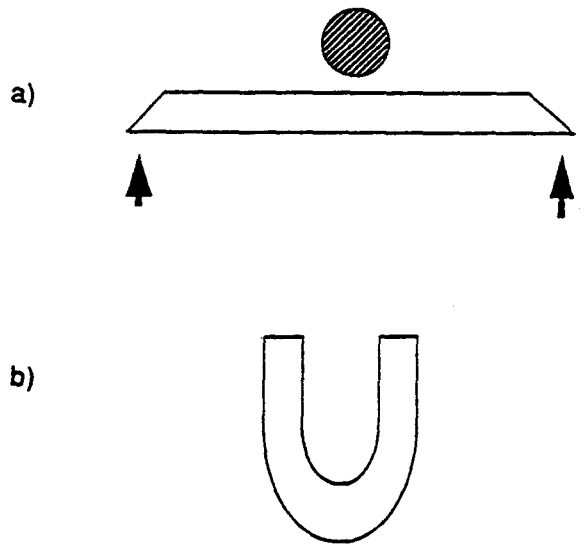

Figure 1. a) Unformed coil end view b) formed coil end view.

When the actual winding procedure is ready to commence, the winding fixture is fastened to a rotating table. The free end of the superconductor is fastened to either the base or top plate. The wire passes through a tensioning system. As the table begins to rotate, the wire will form itself around the bottom-most mandrel plate. After one full revolution, the wire is guided through the slot in the end of the spacer plate outwardly and is wound around the slightly wider mandrel plate on the next layer. Again, after one revolution, the wire filament is guided through the slot in the end of the spacer plate and helped up to the next level. This continues until the wire filament has made it to the topmost layer of the winding fixture. Once this has occurred, the process is repeated, working the wire inward, toward the table. This continues until the desired amount of turns in each layer has been reached.

Step 2: First Curing Cycle

Once the coil has been wound, fins are inserted into the slots where the conductor filament has been wound. The transverse pressure exerted by the fins enables the adhesive to extrude evenly, producing a better bond between layers. The winding fixture is then put in an oven preheated to 230° C. Presently, the bake time is approximately ten minutes at temperature. Thermocouples inserted into the winding mandrel monitor its temperature. After the cure time has elapsed, the winding fixture is removed from the oven and allowed to cool. Once this has been completed, the finished coil will resemble a series of Superconducting ribbons that are all joined at one end.

Step 3: Forming Procedure

The next step is to form the coil into its desired shape. The bending tool diagram is shown in figure 3. The coil is aligned properly and fastened to the center block. The center block serves to form the coil. The flat coil and center block assembly are placed into the channel, formed by the base plate and the two side rails. Pressure is applied all around the coil to ensure that the layers bond. Once the coil has been securely captured in the fixture, it is ready for its second cure cycle.

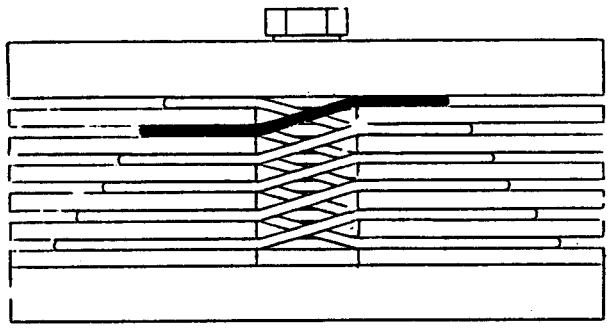

Figure 2. Winding tooling end view (Crossover-slotted end).

Step 4: Final Cure Cycle

Once again, the oven is preheated, this time to 250° C. The bending fixture assembly is placed in the oven for about 15 minutes at temperature. As with the winding fixture, thermocouples are used to monitor the fixture temperature. After time has elapsed, the oven is shut down, the doors opened and the bend fixture is allowed to cool. The coil is then carefully removed from the fixture and is now solidly formed in its desired configuration. For ease of removal, the bending fixture is coated with a Kapton film in areas that contact the coil.

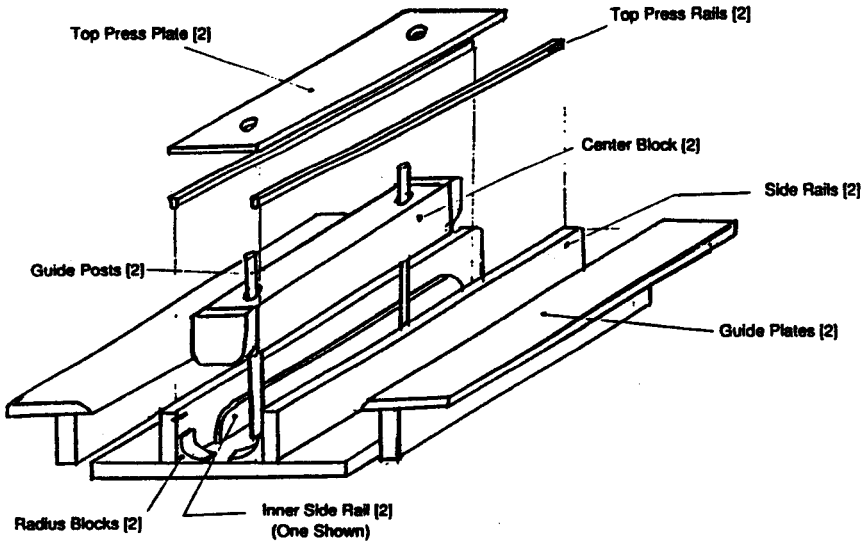

Figure 3. Bending tool.

PERFORMANCE RESULTS

This method of fabricating superconducting coils has been used for the past year-and-a-half by both the SSC Labs and by Everson Electric, a subcontractor to SSC. These coils have been used to manufacture eleven prototype Correction Magnets. Their performance has been inconsistent so far, but they have demonstrated potential. It must be noted that this technique is still under development. The best magnet to date (designated SCOb0.3) had a first quench at 89% design I_{SS}. It performed consistently well in four thermocycles. It was then disassembled for further study. Observation showed that these coils had a very small percentage of voids. One of the goals this technique promises to accomplish is to eliminate voids altogether. These two coils also demonstrated remarkable structural integrity, having an elastic modulus of between 1.3 million psi and 1.6 million psi. It must be pointed out that there are several factors involved in the performance of the Correction Magnets. Many of these factors, such as coil/yoke interface and coil end /support, are directly related to the assembly procedure. Definitive correlations have not been made but the better magnets have had the best coils. As stated before, the technique is still being researched and observations and suggestions have been proposed to improved performance. These will be addressed in the following section.

Further Research

Most of the problems associated with the Ordered Wound Magnet performance seem to do more with the assembly of the Magnet than the fabrication of the Coils, although significant research has not been done to rule out any possibility. The main problem that occurred during coil fabrication was turn-to-turn shorts occurring in the bending phase of the coil. At first it was believed that reducing the pressure that the coils experience would eliminate this problem. This however, resulted in weaker bonds between the layers of the coil. It is now believed that thicker and more durable insulation around the conductor itself would be the best solution. One magnet made by Everson Electric was made in order to test this theory. It was free of shorts and performed moderately well in its quench test.

It was surmised that another possible reason for the turn-to-turn shorts may have been due to the material that the tooling was fabricated from. It was calculated that aluminum had the same thermal coefficient of expansion as the superconducting coil and hence would be the best material choice. It was later proved that the aluminum expanded much more than the superconductor at the higher range of temperatures it was exposed to. This caused large amounts of shear and tensile stress in the insulation. Currently, the material being used is stainless steel. While switching materials has reduced the amount of turn-to-turn shorts, it has not eliminated them completely.

A third alternative recently was discovered. Recent data has shown that if the superconducting wire is not properly annealed, the wire actually stress-relieves itself during the first bake after winding. The result of this is that the coil appears to shrink. If this is the case, the wire is inducing stresses in itself against the tooling.

Another parameter that is currently being studied is the cure time/temperature/pressure relationship. There appears to be a definite impact between this relationship and the structural integrity of the coil. In the early stages of development, there were some problems with delamination between layers. The problem was researched and ultimately solved by adjusting the temperature and pressure during first and second cure cycles. Further studies must be made to determine a method of controlling coil stiffness by adjusting these parameters.

While there are many variables in the performance of a Correction Magnet, the coils are the most significant part. If they are not properly and rigidly constructed, the magnet will display a poor quench performance. The flat and form technique has the potential to produce strong, densely packed coils with a minimum of voids. It is also a relatively simple alternative to coil fabrication. The potential of adapting it to mass production is currently being explored by industrial collaborators of the SSCL.