SSCL-Preprint-260

SSCL-Preprint-260
April 1993
Distribution Category: 40(

R. Ranganathan
A. Propp
B. Campbell
B. Dao

Three-Dimensional Model of a Liquid-Cooled, Low Energy Booster, Radio-Frequency Cavity Tuner at the Superconducting Super Collider

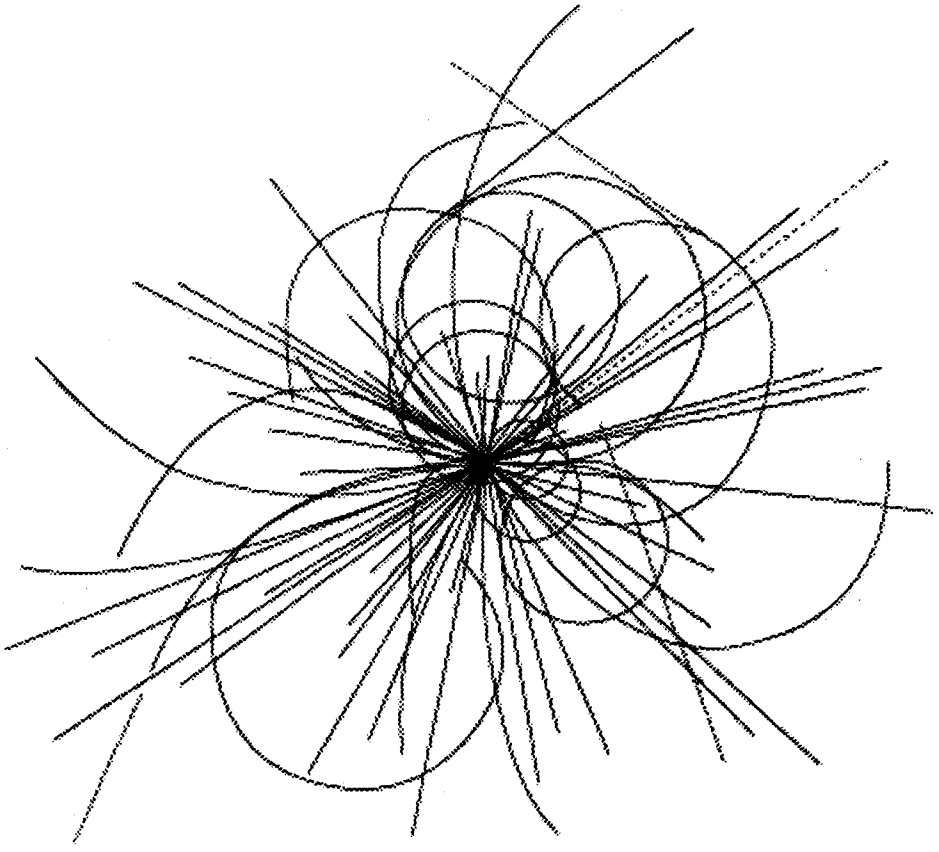

Superconducting Super Collider Laboratory

To be published in *Supercollider 5* SSCL-Preprint-260

Three-Dimensional Model of a Liquid-Cooled, Low Energy Booster, Radio-Frequency Cavity Tuner at the Superconducting Super Collider*

R. Ranganathan, A. Propp, B. Campbell, and B. Dao

Superconducting Super Collider Laboratory†
2550 Beckleymeade Ave.
Dallas, TX 75237

April 1993

*Presented at the Fifth Annual International Symposium on the Super Collider, May 6–8, 1993 San Francisco, CA.
†Operated by the Universities Research Association, Inc., for the U.S. Department of Energy under Contract No. DE-AC35-89ER40486.

THREE-DIMENSIONAL MODEL OF A LIQUID-COOLED, LOW ENERGY BOOSTER, RADIO-FREQUENCY CAVITY TUNER AT THE SUPERCONDUCTING SUPER COLLIDER

R. Ranganathan, A. Propp, B. Campbell, and B. Dao

Mechanical Engineering Department*
Accelerator Systems Division,
SSC Laboratory, Dallas, TX 75237

ABSTRACT

A three-dimensional computational heat transfer and fluid flow model was developed to analyze a forced-flow, liquid-cooled, low energy booster (LEB), radio-frequency (RF) cavity, tuner concept. The results for a commercial dielectric heat transfer fluid[1] indicated safe temperatures in the ferrite.

INTRODUCTION

The RF cavity tuner (modeled) consisted of four ferrite rings encased in a copper-plated titanium housing (Figure 1). A ceramic vacuum window is present at the inside radius of the housing. The perpendicular biasing of the ferrites used for tuning the LEB RF cavity results in heat generation in the ferrites, copper and the coolant. A cooling system is needed to remove this heat[2,3] and ensure that the peak ferrite temperature is maintained at safe levels. Therefore, a model was developed to analyze liquid cooling of the tuner. The results for a commercially available dielectric coolant[1] (chosen based on RF considerations) are reported here. Details of this work are documented elsewhere.[2]

ANALYSIS

Due to symmetry, only one-fourth of the tuner was modeled. The flow and heat transfer were assumed to be steady, three-dimensional, turbulent and incompressible. Buoyancy effects were included and the thermo-physical properties assumed to be constant. The problem was solved using PHOENICS.[4] The heat generated in the ferrites, housing and the coolant were estimated to be 1150, 5000 and 300 W, respectively. Row 1, Table 1 specifies the baseline. Grid dependence (rows 1, 2, Table 1) and other studies[2] were made to obtain reliable results. The uncertainty of the results should be of the order of 10°C.

RESULTS

Qualitative Results for the Baseline (Figure 1)

The velocities show the path of least resistance to be the annular space between the ferrites and the housing. The isotherms (in the ferrite) indicate recirculation cells, where peak temperatures are present. The isobars show a large pressure drop at the exit.

*Operated by the Universities Research Association, Inc., for the U.S. Department of Energy under Contract No. DE-AC35-89ER40486.

Quantitative Sensitivity Results (Table 1)

A 35°C reduction in the coolant inlet temperature, lowers the peak temperatures by a similar amount (row 3), indicating a linear dependence. Multiple inlets and exits lower the peak temperatures due to better coolant distribution (row 4) but do not affect the pressure drop (rows 1 and 4). This may be because the total exit flow area was a held constant. A smaller annular space lowers the peak temperatures by inducing coolant into the interior (row 5). The peak temperatures are sensitive to the inlet cross-section area (row 6) since they are located near the ceramic window across from the inlet. A lower coolant flow rate results in higher peak temperatures and a lower pressure drop (row 7) as expected. Further, the location of the peaks for this case shifted to the top of the ceramic window (not shown in this paper), since at a lower flow rate buoyancy effects are relatively stronger. Buoyancy effects were found to be important (rows 8–11), consistent with other findings.[5,6] The only exception is row 10 where a more optimal coolant distribution due to multiple inlets and exits reduces the relative influence of buoyancy.

Absence of Copper Plating

Without the copper plating, the heat generation in the housing increases five–fold. Therefore, the space between the ferrites and the side walls of the housing was increased to increase coolant circulation there. The overall coolant flow rate was also increased in proportion to the total heat load. The results indicate safe temperatures (row 12).

SUMMARY

A three-dimensional, numerical model was developed to evaluate a liquid-cooled LEB RF cavity tuner. The model was used to evaluate the performance of a commercially available dielectric coolant.[1] Results show that the peak temperatures are sensitive to: the coolant flow rate and inlet temperature, the number of inlets and exits, the space between the ferrites and the housing, and the inlet area. The pressure drop across the tuner was dependent on the coolant flow rate and exit area. Buoyancy effects were found to be important. When the tuner walls are not copper plated, an increased coolant flow together with increased space near the housing can ensure safe temperatures.

REFERENCES

1. Galden Heat Transfer Fluid, AUSIMONT, Morristown, New Jersey.
2. R. Ranganathan, "Three dimensional numerical analysis of a liquid-cooled LEB RF cavity tuner," AMC-2210001, SSC Laboratory, (1992).
3. R. Ranganathan, R., "LEB RF cavity tuner solid cooling," AMC-2210005, SSC Laboratory, (1993).
4. PHOENICS, an acronym for Parabolic, Hyperbolic or Elliptic Numerical Integration Code Series, software developed by Concentration Heat and Momentum Ltd., United Kingdom.
5. B. Campbell, "SSC LEB cavity mechanical design considerations," presented at the RF Workshop, TRIUMPF, Vancouver, B.C., October 25–26, (1990).
6. B. Campbell and R. Ranganathan, "An experimental and analytical study of a buoyancy driven cooling system for a particle accelerator," 1993 Particle Accelerator Conference, May (1993).

NOMENCLATURE AND UNITS

a_e (a_i)	total cross–section area of all the exits (and inlets), mm^2
B	buoyancy effects included or not ? yes (Y) or no (N)
C	is a copper coating present on the housing or not ? yes (Y) or no (N)
ΔP	pressure drop across the tuner cavity, Pa
ΔT	average temperature rise of the coolant across the tuner cavity, °C
Grid	number of cells used in computations
m	coolant flow rate, kg/minute
N_e (N_i)	number of coolant exits (and inlets)
S_a	annular space between the ferrites and housing, mm
S_w	space between the ferrites and the side walls of the housing, mm
T_{ci}	average coolant inlet temperature, °C
T_{pc} (T_{pf})	peak coolant (and ferrite) temperature, °C

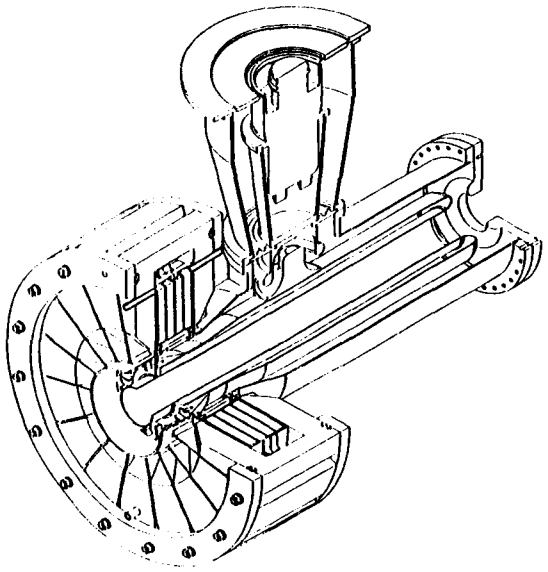

TYPICAL LEB RF-CAVITY

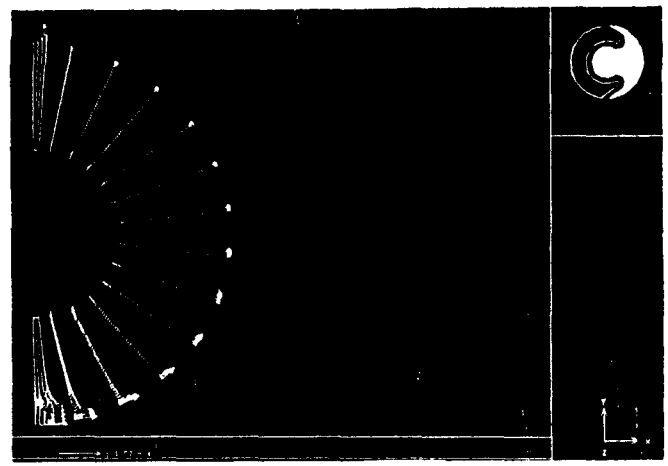

FLOW FIELD

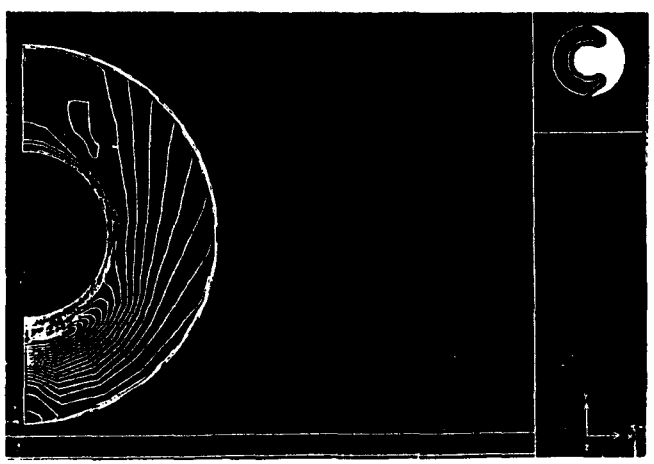

ISOTHERMS IN THE FERRITE

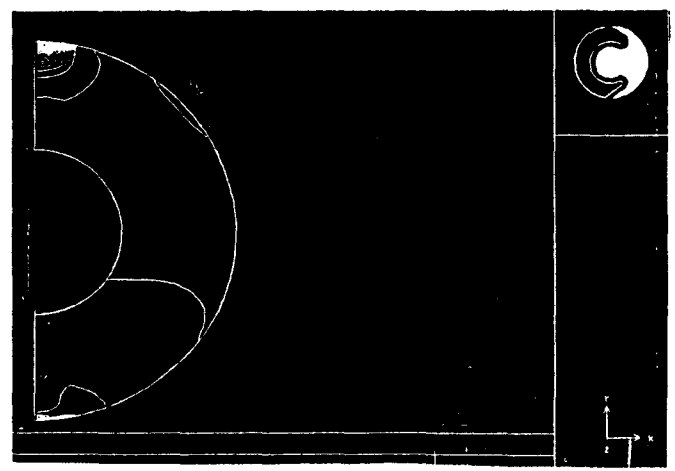

ISOBARS

Figure 1. Qualitative results for the baseline.

Table 1. Sensitivity Results

Row	Grid	T_{ci}	ΔT	N_i	N_e	S_e	a_i	a_e	m	B ?	C ?	S_w	ΔP	T_{pc}	T_{pf}
1	25000	5	5	2	2	6.5	585	585	80	Y	Y	3.8	4800	21	28
2	50000	5	5	2	2	6.5	585	585	80	Y	Y	3.8	4800	29	21
3	25000	-30	5	2	2	6.5	585	585	80	Y	Y	3.8	5200	-14	-9
4	25000	5	5	6	6	6.5	585	585	80	Y	Y	3.8	4600	24	23
5	25000	5	5	2	2	2.5	585	585	80	Y	Y	3.8	3850	18	26
6	25000	5	5	2	2	6.5	1170	585	80	Y	Y	3.8	4800	18	23
7	25000	5	5	2	2	6.5	585	585	20	Y	Y	3.8	560	41	39
8	25000	5	5	2	2	6.5	585	585	80	N	Y	3.8	4900	38	33
9	25000	-30	5	2	2	6.5	585	585	80	N	Y	3.8	4900	3	-4
10	25000	5	5	6	6	6.5	585	585	80	N	Y	3.8	4700	28	23
11	25000	5	5	2	2	2.5	585	585	80	N	Y	3.8	3850	24	25
12	25000	5	5	2	2	6.5	2377	2377	325	Y	N	10.0	-	41	23