SSCL-Preprint-233

SSCL-Preprint-233
April 1993
Distribution Category: 400

C. Chang
S. Chen
A. Jalloh
D. Martin

A Study of Structural Integrity of the SSC Magnet Six-Strut Support System

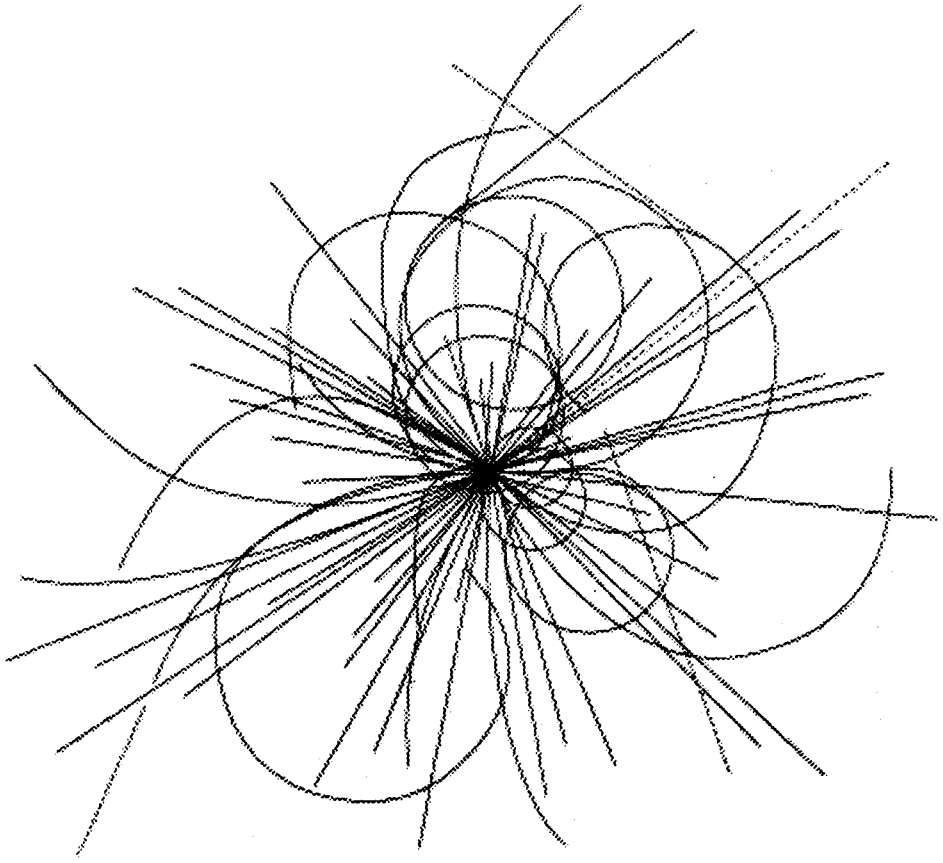

Superconducting Super Collider Laboratory

To be published in *Supercollider 5* SSCL-Preprint-233

A Study of Structural Integrity of the SSC Magnet Six-Strut Support System*

C. Chang, S. Chen, A. Jalloh, and D. Martin

Superconducting Super Collider Laboratory†
2550 Beckleymeade Ave.
Dallas, TX 75237

April 1993

*Presented at the Fifth Annual International Symposium on the Super Collider, May 6–8, 1993 San Francisco, CA.
†Operated by the Universities Research Association, Inc., for the U.S. Department of Energy under Contract No. DE-AC35-89ER40486.

A STUDY OF STRUCTURAL INTEGRITY OF THE SSC MAGNET SIX-STRUT SUPPORT SYSTEM

C. J. Chang, S. Chen, A. Jalloh, and D. M. Martin

Magnet Systems Division
Superconducting Super Collider Laboratory
2550 Beckleymeade Avenue
Dallas, TX 75237

INTRODUCTION

In the preliminary SSC design configuration, the overall magnet cryostat assembly is supported externally at three mechanical positioning points by two stands attached to the collider tunnel floor. Differing from the SSC design concept, a well designed and simply operated six-strut support system has been used at the Lawrence Berkeley Laboratory/Advanced Light Source (LBL/ALS) successfully.[1] In brief, the struts are equipped with ball joints at each end, and the struts are so arranged in a manner of three vertical, two lateral, and one longitudinal directions that provide the minimum constraints necessary to support the ALS system in the accelerator tunnel. Because the struts are made of differential screws which are adjustable in length, the six-strut system also provides minute controllability for cryostat alignment purposes. Also, the six-strut support system keeps the magnet from direct exposure to the accelerator tunnel floor which may lower the potential risks for the magnet from the ambient vibration and ground motion.[2] Because of the mentioned merits, the six-strut support configuration is being considered as an alternative to the SSC magnet support system.

This paper presents a qualitative study for the structural integrity of the SSC six-strut support system. Several six-strut design configurations are investigated.

THEORETICAL BACKGROUND

The six force equilibrium equations required for a three dimensional system are

$$\Sigma F_x = 0 \qquad \Sigma F_y = 0 \qquad \Sigma F_z = 0$$

$$\Sigma M_x = 0 \qquad \Sigma M_y = 0 \qquad \Sigma M_z = 0$$

*Operated by the Universities Research Association, Inc., for the U.S. Department of Energy under Contract No. DE-AC35-89ER40486.

where the summations imply the inclusion of all force and moment components in the specified coordinate system. The above equations can be deduced to a fact that at least six reactions are required to maintain overall equilibrium of a body in space, which is the basis for the six-strut support system design.

BASELINE SIX-STRUT DESIGN

The SSC magnet baseline six-strut support system design configuration uses three vertical, two lateral, and one axial struts to maintain the overall cryostat assembly in the collider tunnel space. Two of the three vertical struts are placed on one side near both ends, and the third vertical strut is placed at the midpoint of the opposite side of the cryostat shell, which provide the vertical movement, axial rolling, and pitching controllability for the cryostat. The two lateral struts are connected to the attachment bosses on the bottom shell near both ends of the cryostat to control the lateral movement and yawing of the cryostat assembly; the axial strut is connected to the middle attachment boss on the cryostat bottom shell to control the cryostat axial movement.

Figure 1 shows the cryostat finite element analysis result for a typical SSC 15 meter long dipole magnet for the baseline six-strut design configuration.

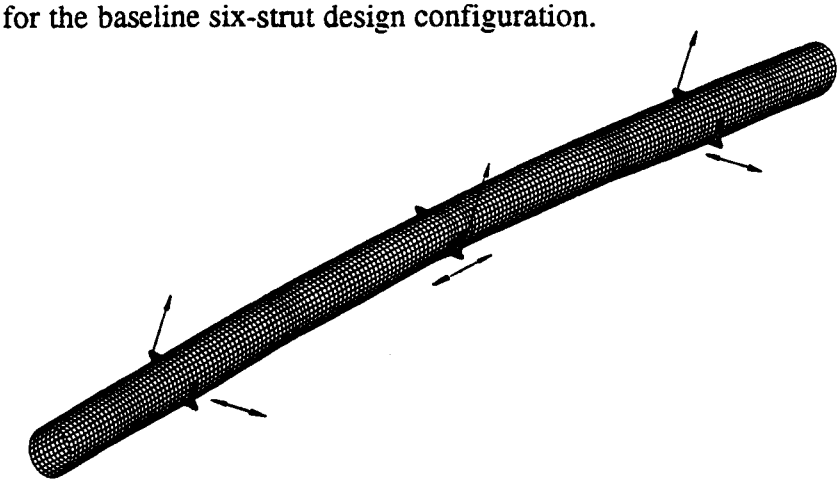

Figure 1. Cryostat deformed shape for the baseline six-strut configuration for a typical SSC 15 meter long dipole magnet.

Note that the cryostat has a twist, toward the opposite direction of the vertical struts, which results from the couples produced at the vertical-strut lug positions. Analysis results also indicate that the cold mass is shifted laterally and has a roll, following the cryostat deformed pattern, which increases the cold mass deflection. Also, the cold mass support posts are no longer in the original upright positions and remain in a bending state, that may cause the support posts to buckle during the operating life of the magnets. Although, by relocating the vertical struts along the cryostat axis it is possible to reduce the cryostat twist, the twist presents a significant cryostat design effort to meet the SSC magnetic alignment requirements.

ALTERNATE SIX-STRUT DESIGNS

Three-Symmetrical-Vertical-Strut System

To avoid the cryostat twist, as seen in the baseline six-strut design, one alternative is to place two of the three vertical struts symmetrically at both sides near one end, and the third vertical in the centerline of the other end of the cryostat, as shown in Figure 2. As in the baseline design, two lateral struts are used to control the lateral movement and yawing, and one axial strut is used to control the axial movement of the cryostat.

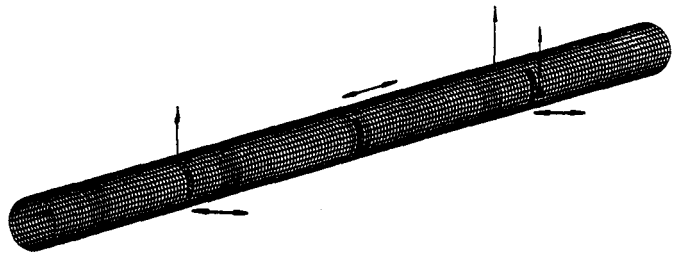

Figure 2. Alternate six-strut configuration with three vertical struts.

Two-Symmetrical-Vertical-Strut System

Another alternate six-strut configuration is to use two vertical, three lateral, and one axial strut to support the cryostat. The two vertical struts are placed in the centerline of the cryostat to control vertical movement and pitching; the three lateral struts are used to control the lateral movement, axial rolling, and yawing; the longitudinal strut is to handle the axial movement of the cryostat.

Cryostat Deformed Shapes

For the two above mentioned alternate six-strut configurations, because the space of the SSC collider tunnel is limited, the upper cryostat assembly must be suspended from the top and the lower cryostat supported at the bottom. Finite element analysis results for the upper and lower cryostats supported with two vertical struts are shown in Figures 3 and 4, respectively.

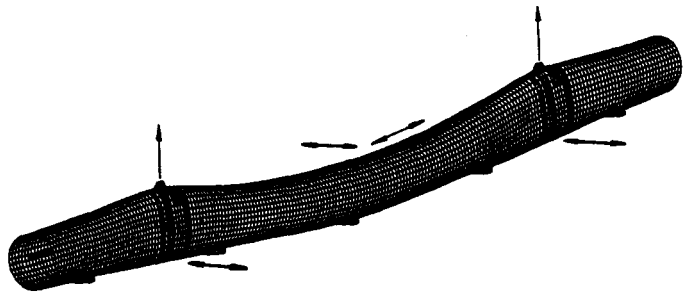

Figure 3. Upper cryostat deformed shape with two vertical struts suspended from the top.

The upper cryostat shell is pulled into a thin oval shape and the lower cryostat is compressed into a fat oval shape at the vertical-strut lug position. Similar deformed shapes were observed for the upper and lower cryostats (not shown in the paper) for the alternate three-vertical-strut design configuration.

Although these two alternate six-strut configurations avoid the cryostat twist, as seen in the baseline six-strut design, the significantly different cryostat deformations for the upper and lower magnets in the collider tunnel still present complexity for alignment purposes.

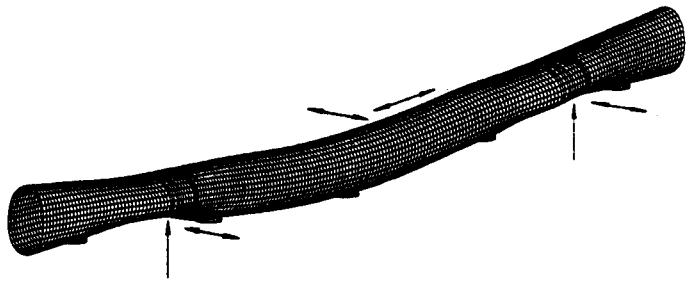

Figure 4. Lower cryostat deformed shape with two vertical struts supported at the bottom.

MODIFIED SINGLE VERTICAL-STRUT ATTACHMENT

To eliminate the cryostat shell deformation difference between the upper and lower magnets in the collider tunnel, the single vertical-strut attachment to cryostat for the above mentioned alternate six-strut configurations may be replaced with an adapter connected to both sides of the cryostat shell as shown in Figure 5.

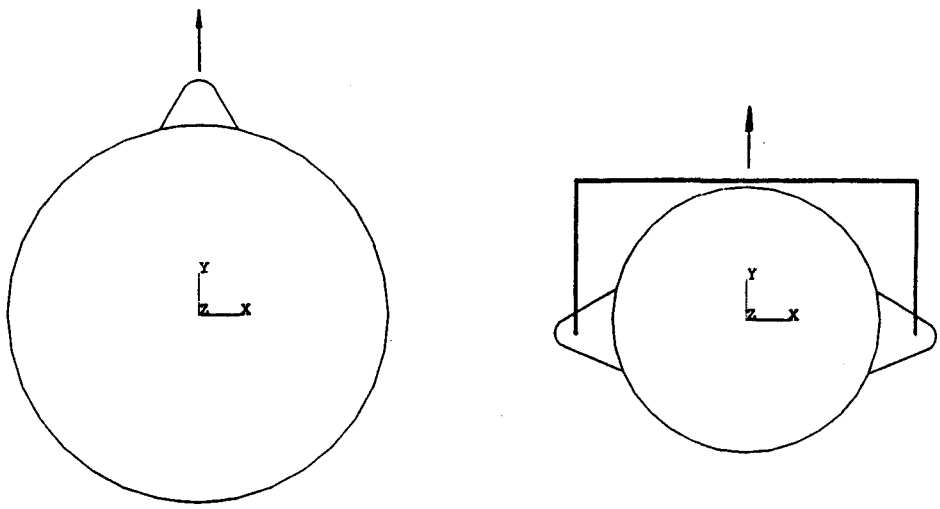

Figure 5. Illustration of a modified attachment for the single vertical-strut to cryostat.

SUMMARY

The SSC magnet baseline six-strut design configuration results in a cryostat twist, which presents significant design efforts and magnetic alignment complexities. To avoid the cryostat twist, two possible alternate six-strut configurations are examined first; after that, a modified attachment concept for the single vertical-strut to cryostat is proposed, which may provide a direction for the SSC magnet six-strut support system design consideration.

REFERENCES

1. T. Lauritzen, SSC Laboratory six strut support system talk, November 12, 1991, presented at the Superconducting Super Collider Laboratory, Dallas, Texas.

2. P. A. Manning, and R. B. Burdick, Dynamic Analysis of a Six Strut System, June 19, 1992, presented at the Superconducting Super Collider Laboratory, Dallas, Texas.