SSCL-Preprint-222

SSCL-Preprint-222
April 1993
Distribution Category: 400

K. Stifle
B. Zang

Experimental Strength Verification of SSC Cryogenic Transfer Line Internal Suspension System

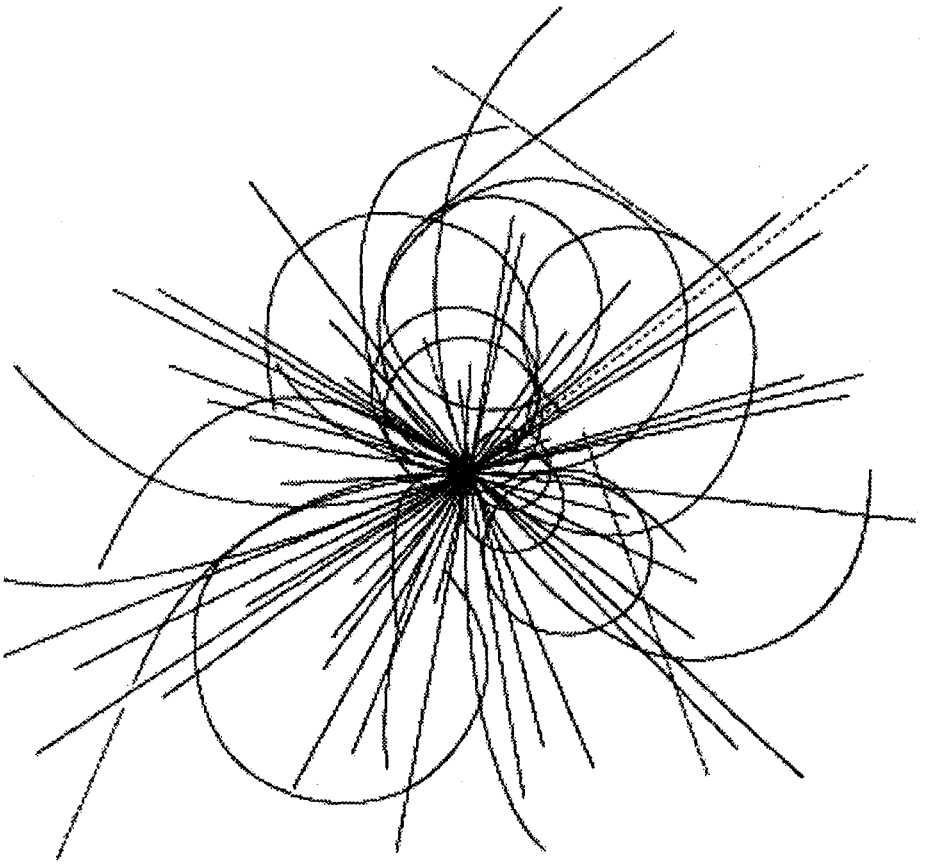

Superconducting Super Collider Laboratory

To be published in *Supercollider 5* SSCL-Preprint-222

Experimental Strength Verification of SSC Cryogenic Transfer Line Internal Suspension System*

K. Stifle and B. Zang

Superconducting Super Collider Laboratory†
2550 Beckleymeade Ave.
Dallas, TX 75237

April 1993

*Presented at the Fifth Annual International Symposium on the Super Collider, May 6–8, 1993 San Francisco, CA.
†Operated by the Universities Research Association, Inc., for the U.S. Department of Energy under Contract No. DE-AC35-89ER40486.

EXPERIMENTAL STRENGTH VERIFICATION OF SSC CRYOGENIC TRANSFER LINE INTERNAL SUSPENSION SYSTEM

Kirk Stifle and Burt Zhang

Superconducting Super Collider Laboratory*
2550 Beckleymeade Ave
Dallas, Texas 75237

INTRODUCTION

A transfer line system and support structure has been proposed by Zhang and Stifle[1] and Zhang[2]. The support structure uses three composite (G-10) plates to support the seven cryogenic lines. The cryogenic lines range in temperature from 80 K to 4 K. There are two 80 K nitrogen lines, two 20 K vapor helium lines, and three 4 K helium lines. The 80 K lines are attached to one plate, the 20 K lines are attached to another plate and the 4 K lines are attached to the last plate. Stainless steel rods are used to connect the plates to each other. This arrangement results in essentially three different temperature levels: an 80 K plate, a 20 K plate, and a 4 K plate.

There are three different support structures; an elbow support, a longitudinal support, and a radial support. Figure 1 shows the longitudinal and radial support structures. The main difference between the structures is the thickness of the plates. The elbow support is the thickest because it must carry the largest load and the radial support is the thinnest because it carries the lightest load. There are slight differences in the 80 K plates of each support but the 4 K and 20 K plates remain virtually unchanged except for the thickness. The 80 K plate of the elbow support has more "tabs" which are used to attach it to the vacuum vessel than the 80 K plate of the longitudinal support. The 80 K plate of the radial support is not attached to the vacuum vessel but has rollers which allow it to move as the tubes expand and contract with temperature changes. Only the elbow and longitudinal supports were tested.

EXPERIMENTAL SETUP

The test setup is shown in Figure 2. A complete description of the test setup and test procedure can be found in Stifle and Zhang[3]. The idea was to test the support structure in as mechanically realistic a condition as possible. The 80K plate was bolted to a hollow ring used to simulate the vacuum vessel. A steel plate was placed on top of the ring and 80 K plate. The 4K and 20K plates were placed on top of this steel plate and attached to the 80K plate. The steel plate had holes drilled to allow the support plates to be connected together. Another steel plate was placed on steel rods which were welded to the bottom steel plate. This plate provided a surface for hydraulic jacks which were used to apply the load. Stainless steel inserts were machined and attached to the G-10 plates at the tube locations. Steel rods were connected to the inserts and to the jacks. Pressure gages on the hydraulic jacks were used to measure the applied load.

Strain gages were placed at various locations on the plates. The location of the gages was determined from finite element analysis of the plates. The gages were general purpose gages of Canstantan foil with a polymide film backing. The gages had maximum strain limits of 3% (30,000 μstrain).

---

* Operated by Universities Research Association, Inc., for the U.S. Department of Energy under Contract No. DE-AC02-89ER40486.

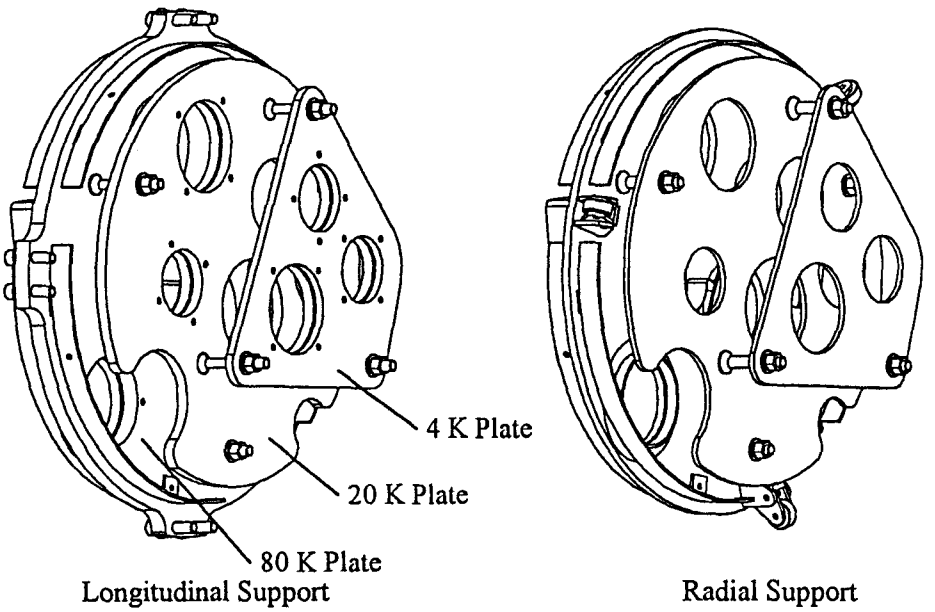

Figure 1. Longitudinal and Radial Supports

The loading on the longitudinal support is due to the weight of the plates, tubes, copper shield, and multilayer insulation blankets. The maximum loading applied to the longitudinal support was three times the design load. The elbow support has the same loading plus the addition of a hydrostatic pressure force from the interconnect bellows. The bellows design has not be finalized and the actual loading cannot be determined until this happens. The actual loading is expected to be in the upper range of the loads tested.

The method of testing was as follows: The jacks were pumped until the desired pressure was achieved on all three plates. Next, the strain from each gage was read from the indicator and manually recorded. The loading on the plates was then increased to the next level and readings taken. The procedure was repeated until the maximum load was reached, after which the pressure was released back to zero. The entire test was then repeated twice more.

RESULTS AND DISCUSSION

For a complete presentation of the data, see Stifle and Zhang[3]. Figure 3 shows typical data for the longitudinal support. The data is for the longitudinal 80 K plate.

The data for all the longitudinal support plates show increasing strain as the loading is increased. The strain for the 80 K plate was almost all compression (negative strain) except for two gages. The two gages were placed on the outside of where the liquid nitrogen lines would be attached and show very large tensile (positive strain) strains. The maximum strain is approximately 1750 μstrain. This gives a stress value of 4375 psi at the SG82 location using a value of 2.5×10^6 for the modulus.

The strains on the 20 K plate were relatively small and should not pose a problem. The strains on the 4 K plate were slightly higher than those on the 20 K plate. However, these values were all much lower than the maximum strains on the 80 K plate.

Figure 4 shows typical data for the elbow support. The data is for the elbow 80 K plate. We believe that the unusual nature of the data is due to the interactions between the plates.

The strain was considerably higher on this support than on the longitudinal support. This was expected because of the increased loading which the elbow support is expected to have. It was anticipated that the majority of the load would be transmitted back to the 80 K plate through the steel connecting rods. The data does not indicate that this happened. The 4 K plate load was not transmitted back to the 80 K plate. This indicates that the 80 K and 20 K plates were too stiff or the 4 K plate was not stiff enough. The 20 K and 80 K plates need to bend more or the 4 K plate needs to bend less to help reduce the strains on the 4 K plate. Otherwise, the 4 K plate will have a much larger stress and will yield before the other plates.

Because no gages placed at the edge of the liquid nitrogen lines, the maximum stress on the 80 K plate may not have been recorded. The maximum measured strain occurred on the 4 K plate and yielded a stress of approximately 7450 psi (2.5×10^6 psi modulus).

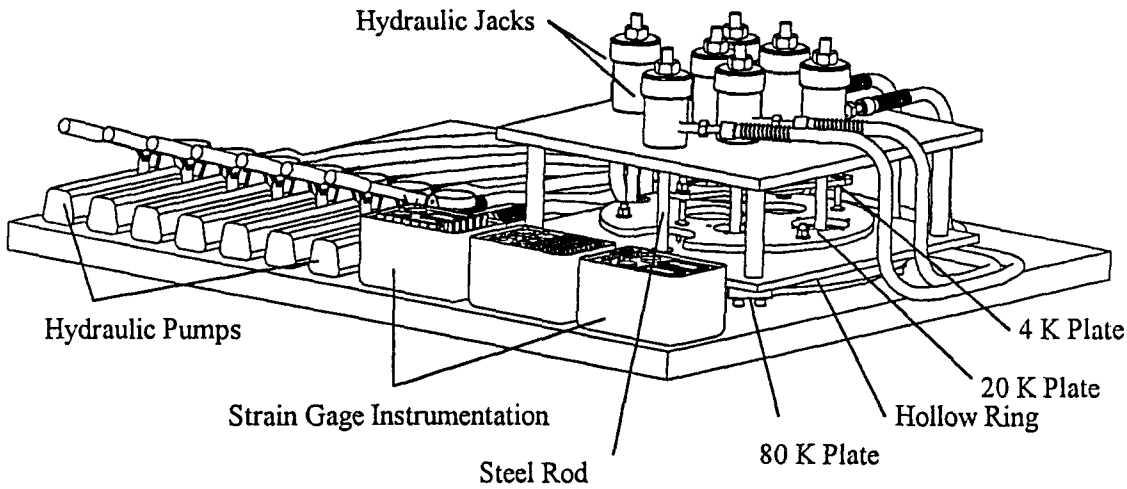

Figure 2. Experimental Setup

The strain gages were placed only on the top surface of the plates. Therefore, we measured axial strain on the top surface of the plates. This number should be compared to the maximum allowable tensile/compressive stress for G-10. A factor of safety of 5 was applied to the ultimate stress to obtain a maximum allowable stress. Using 20% of ultimate gives an allowable stress level of 9000 psi in tension and 10400 psi in compression for the warp direction. The allowable loading is 6000 psi for tension and 8400 psi for compression in the fill direction. The stress on the longitudinal support was below these values. The stress on the elbow support was below these values except for on the 4 K plate where the stress value was larger than the allowable tensile stress in the fill direction.

CONCLUSION

A prototype internal suspension system made from composite (G-10) materials was built and tested. G-10 was chosen as the main support material for convenience and cost and other materials (composite, metal, or combination of composite and metal) could have been used. The parts could have also been made from injection molding or resin transfer molding instead of machined.

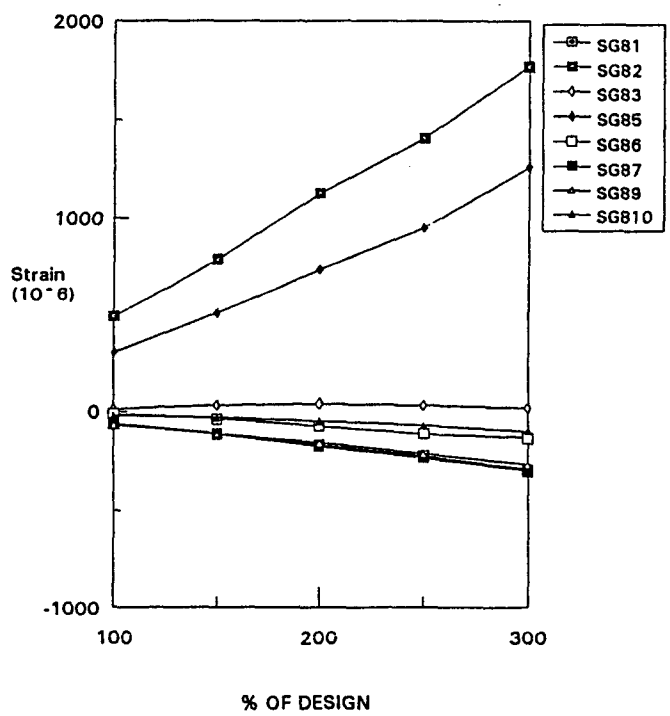

Figure 3. Longitudinal Support 80 K Plate Strain Data

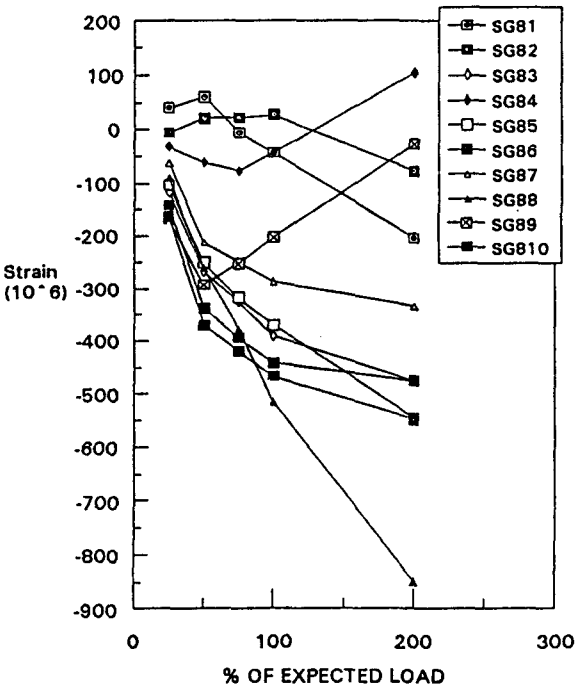

Figure 4. Elbow Support 80 K Plate Strain Data

The prototype suspension system was tested to determine stress levels in the material. We can draw some conclusions from this testing:

1. Neither G-10 support (elbow/longitudinal) yielded when loaded with anticipated loads.
2. The longitudinal support had no problem with the anticipated loads when tested at room temperature..
3. The elbow support stress exceeds 20% of the ultimate stress using a value of 2.5 x 10^6 psi for Young's modulus. This may cause a problem depending on the final bellows design. However, the plates could be made thicker or another material could be used to reduce the stress.
4. When tested at room temperature, the G-10 structure did not have problems with the applied loading. G-10 or another composite can be considered as options for the support structure if further testing is carried out. This testing should show that the material will not lose strength at cryogenic temperatures over the intended operating life time, i.e. 20 year life.

ACKNOWLEDGMENTS

The authors would like to thank the SSC Cryogenics Shop for help in the set up and assembly of the experimental apparatus.

REFERENCES

1. B. Zhang and K. Stifle, "Preliminary Design of Sector Cryogenic Shaft Transfer Line System", Presented at 5th International Industrial Symposium on the Super Collider (IISSC), San Francisco, CA, May 6-8 (1993).
2. B. Zhang, "Stress Analysis on SSC Cryogenic Transfer Line Internal Suspension System", Presented at 5th International Industrial Symposium on the Super Collider (IISSC), San Francisco, CA, May 6-8 (1993)
3. K. Stifle and B. Zhang, "Development and Testing of a Prototype Internal Suspension System Using Composite Materials for Cryogenic Transfer Lines", SSC Cryo Note 92-16 (1993).