SSCL-Preprint-211

SSCL-Preprint-211
April 1993
Distribution Category: 400

H. Krebs
R. Wands
J. Western

An Engineering Design Study of the Support Platform Assembly for the SSC SDC Detector

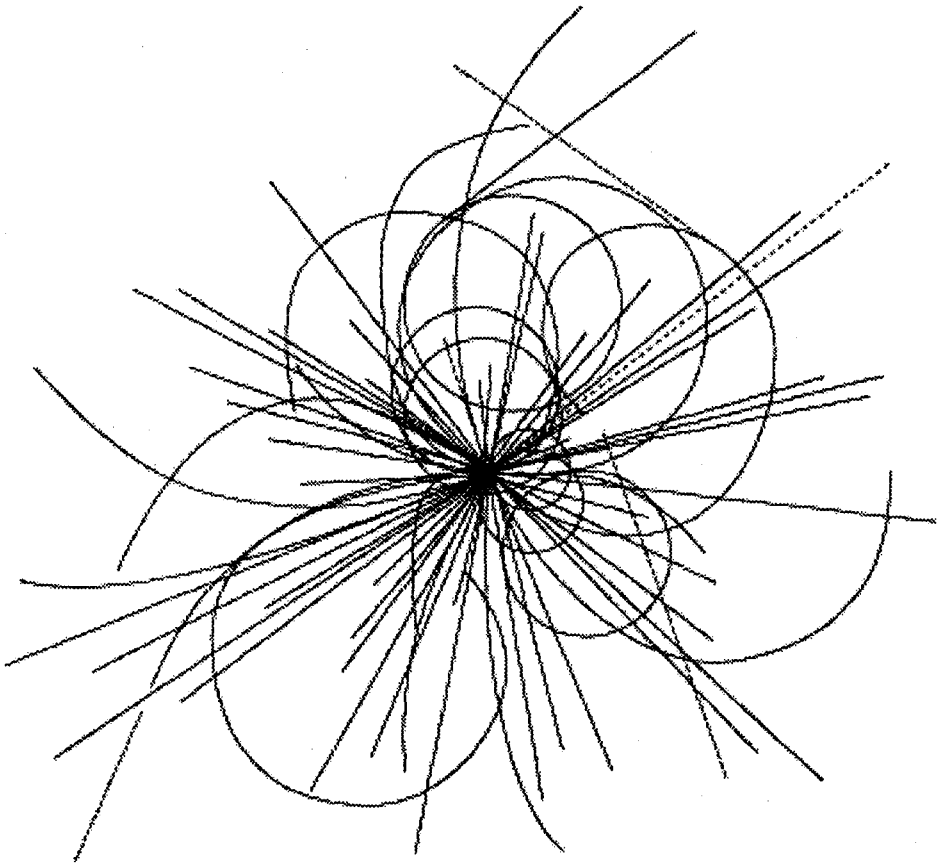

Superconducting Super Collider Laboratory

To be published in *Supercollider 5* SSCL-Preprint-211

An Engineering Design Study of the Support Platform Assembly for the SSC SDC Detector*

H. Krebs, R. Wands, and J. Western

Superconducting Super Collider Laboratory†
2550 Beckleymeade Ave.
Dallas, TX 75237

April 1993

*Presented at the Fifth Annual International Symposium on the Super Collider, May 6–8, 1993 San Francisco, CA.
†Operated by the Universities Research Association, Inc., for the U.S. Department of Energy under Contract No. DE-AC35-89ER40486.

AN ENGINEERING DESIGN STUDY OF THE SUPPORT PLATFORM ASSEMBLY FOR THE SSC SDC DETECTOR

H. J. Krebs, R. H. Wands[1], and J. L. Western

Superconducting Super Collider Laboratory*
2550 Beckleymeade Avenue
Dallas, TX 75237-3997

[1]Fermi National Accelerator Laboratory
Wilson Road, P. O. Box 500
Batavia, IL 60510*

INTRODUCTION

A large angular acceptance high energy physics particle detector is presently being designed by the Solenoidal Detector Collaboration (SDC) for the purposes of doing high p_t physics at the Superconducting Super Collider Laboratory (SSC Laboratory). The support platform assembly is the structural device which transfers the 30,000 tonne gravitational load of the octagonally shaped muon barrel toroid (MBT) and the other detector components to the foundation below. The detector components are very sensitive to differential deflection and rely on the barrel toroid and support platform for stability. Figure 1 shows a front elevation view of the support looking in the direction of the beam axis. A side elevation view of the support looking perpendicular to the beam axis from the collider ring center (looking east) is shown in Figure 2.

The operational load path is provided by two pairs of inclined longitudinal plates resting at 67.5° on three pairs of plate girders that are positioned in-line in Z. The plate girders are held together laterally with 38 tie bars and supported vertically by the vertical adjustment system. The lateral stability of the inclined plates is provided by 22 stabilizer beams with cross bracing between each beam. The Z location of each split in the plate girder is coincident with the Z location of the gap in the calorimeter (4428 mm from the detector center.) The width of each split is 155 mm to allow installation of the alignment reference system.

The collider beam line in the IR-8 underground experimental hall is oriented at a 2.16 mm/m slope from south to north as shown in Figure 2. The support is designed and installed to provide this slope at the top surface of the inclined plates. The assembled support rests on a ten foot thick steel reinforced 8000 psi concrete slab. The slab has a 2 mm differential deflection criteria under normal gravitational loading.

*Operated by the Universities Research Association, Inc., for the U.S. Department of Energy under Contract No. DE-AC35-89ER40486.

The total length of the support platform after assembly is 28,060 mm. The X width of the assembly is 12,430 mm. The height of the assembly is 4650 mm measured perpendicular to the beam line at the detector interaction point. The height of the vertical adjustment system is 1000 mm. The weight of the support platform assembly and the vertical adjustment system is approximately 2000 tonnes. The physical size and weight of the individual components are driven by a 18 meter x 11 meter equipment access shaft and the 100 tonne capacity crane in the underground experimental hall.

OVERVIEW OF PLATFORM PARTS AND THEIR FUNCTIONS

INCLINED PLATE

The inclined plates provide the load path from the detector to the plate girder assemblies below. Precision 100 mm radii are provided top and bottom to provide a moment free connection between the MBT and the inclined plates and also between the plate girder assemblies and the inclined plates. These edges are flame hardened and will be coated with a molybdenum disulfide based lubricant prior to installation. There are vertical grooves machined in the outside surfaces of the plates at Z=4428 mm and Z=11453 mm to provide clearance for the alignment reference system. The grooves are 155 mm wide in Z and 65 mm deep. There are two inclined plates on each side of the support assembly. Each pair of plates is connected tongue-in-groove so that they may act as a single mechanical unit. Each inclined plate is a 275 mm thick by 3220 mm wide by 14,030 mm long stress relieved steel forging. The material will be selected on the basis of weldability and mechanical properties of 40,000 psi minimum yield and 70,000 psi minimum tensile strengths. The weight of each inclined plate is 99 tonnes.

PLATE GIRDER ASSEMBLIES

The plate girder assemblies are ASTM A36 structural steel weldments that provide the load path from the inclined plates down to the vertical adjustment system. The girders have enough axial bending stiffness to allow vertical adjustments by the vertical adjustment system without over stressing the inclined plates. The girders are designed in such a way that the pivot groove centerline and the bottom machined surfaces will provide the 2.16 mm/m angle to allow assembly of the upper detector components parallel to the collider beam.

The girder assemblies consist of dual 50mm thick vertical trapezoidal plates spaced in Z to coincide with the spacing of the base plates that are embedded in the pit floor. The center to center spacing between these plates is 230mm to maximize the effective area of the vertical adjustment system. The trapezoidal plates are connected in Z with 75mm thick vertical webs. The vertical height of the girder is 1585 mm, 1565 mm and 1545 mm for the south, mid and north girder assemblies respectively. The girders also contain 200 mm × 613 mm steel blocks with three 78 mm diameter through holes at each tie bar location. The blocks provide buckling resistance in the vertical webs from bolt preload and aid in the insertion of the three M72 bolts that connect the tie bar yoke to the inner web of the plate girder. The bolts are spaced vertically 219 mm to standardize the assembly tooling with the MBT. The inner and outer surfaces of the plate girder webs are reinforced with a 25 mm thick plate in the area of this bolted connection. The webs and trapezoidal plates are sandwiched between two 75 mm thick plates that run the entire length of the assemblies. The top plate is 700 mm wide and the bottom plate is 3000 mm wide. The Z length of the plate girders is 9525 mm, 8700 mm and 9525 mm for the south, mid and north girder assemblies respectively. The interface between the trapezoidal plates and the base plate is braced with 500 mm tall by 400 mm wide by 50 mm thick gussets.

Two 50 mm thick pads straddle each pair of trapezoidal plates to provide mounting surfaces for the fixtures that are necessary to install and position the inclined plates and the stabilizer beams. The lower pads are horizontal and provide a pushing surface in the vertical direction for positioning of the stabilizer beams during assembly. The upper pads

are located at 67.5° from horizontal to provide a pushing surface that is perpendicular to the inclined plate on the opposite side.

The bottom plate of the plate girder is reinforced locally at the interface with the vertical adjustment system with 900 mm wide by 3000 mm long plates. The stock thickness of these plates varies from 75 mm to 100 mm. The bottom surface of these plates is planed to provide the 2.16 mm/m slope of the detector.

The interface between the plate girder and the inclined plate is a 300 mm x 200 mm saddle block which has been machined to 22.5° with a 100 mm radius semi-cylindrical notch machined to fit the radiused end of the inclined plates. The 22.5° angle limits loading of the inclined plate to the axial direction. The block is inserted in a notch that is provided in the trapezoidal plates thus enabling the trapezoidal plates to resist the shear load that is transmitted from the inclined plate. The shear load that would develop from lateral loading in the Z direction is resisted by mechanical stops machined into the inclined plate/plate girder interface. These stops are located at Z=±2850 mm and ±8815 mm. Lateral loads in the X direction are resisted by the pivot sockets.

The weight of the plate girder assembly is 84 tonnes, 71 tonnes and 83 tonnes for the south, mid and north girders respectively.

STABILIZER BEAMS

The 22 stabilizer beams are W36x210 ASTM A36 hot rolled sections that provide the connection between the inclined plates and are also used to stabilize the support and resist lateral loads. Each connection to the inclined plate is designed as a moment carrying connection with dual L8x8x1 ASTM A36 hot rolled sections with twenty 1.5 inch diameter A325 bolts in shear and forty four 1.5 inch diameter A325 bolts in tension and bending. Each beam has six 500 mm wide x 300 mm tall reinforced openings for cable tray access to the inner muon chambers of the bottom octant. The weight of each beam is 2.5 tonnes.

TIE BARS

38 tie bars run laterally between the plate girder assemblies to react the horizontal component of the detector load on the inclined plate. The tie bars are ASTM A36 steel that are 3700mm long and have a cross section of 200mm wide x 500mm high. The large cross section is necessary to limit axial elongation of the bars (separation of the plate girders) to 1 mm during normal detector operational loading. The connection to the plate girder uses a 175 mm diameter x 225 mm long hardened steel pin in double shear to minimize bending moments when alignment corrections are made with the vertical adjustment system. The weight of each tie bar is 6 tonnes.

UPPER SADDLE BLOCKS AND SHIMS

An upper saddle block will be incorporated as the interface between the support platform assembly and the muon barrel toroid. 2 mm thick shim stock shall be positioned on the top of the blocks to provide the Y (vertical) alignment capability for the barrel floor. The alignment of the barrel in the X direction is accomplished using a two degree stainless steel wedge shaped key between the saddle block and the inner surface of the notch in the MBT bottom block. The wedge key will enable a 5 mm correction in X during installation of the MBT. A 25 mm thick hardened steel sleeve is positioned between the radiused end of the inclined plate and the block, and resides in a semi-cylindrical pocket that has been machined in the block. A 25 mm x 25 mm steel key prevents rotation of the sleeve with respect to the saddle. The saddle blocks are 874mm long and 300 mm wide x 195 mm tall. Some blocks must have machined notches to accommodate clearance for the alignment reference system. The material of the upper saddle block is 6061-T6 aluminum in order to provide magnetic resistance between the support platform and the muon barrel toroid.

CONCLUSION

The support platform assembly is presently in the preliminary design phase and is being optimized for function, material usage, fabricability and ease of installation. A detailed finite element model is being created that will encompass the muon barrel toroid, support platform and foundation as a single mechanical unit. The model will be used to investigate the effects of slab warping as well as failure modes and effects analyses of the vertical adjustment system.

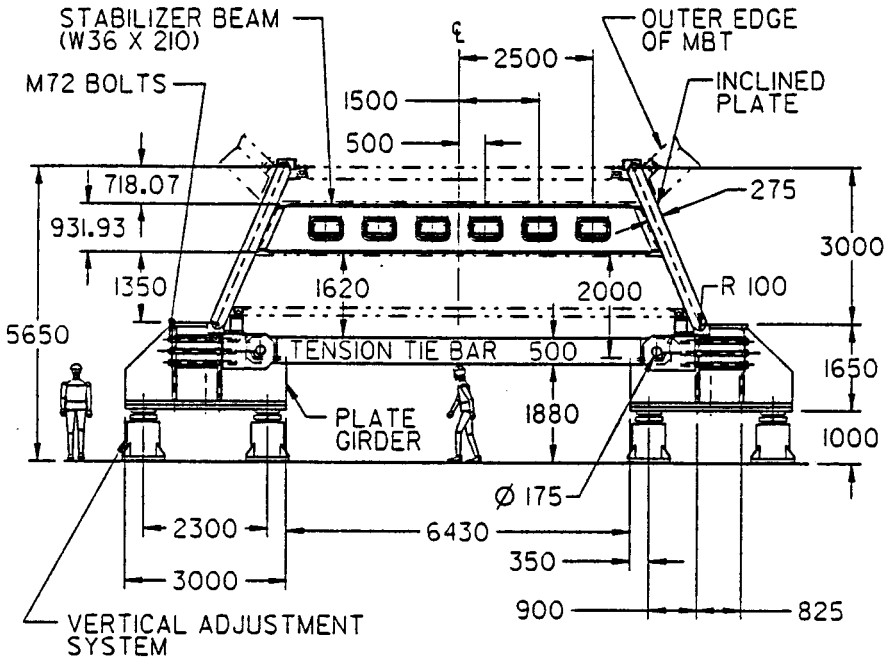

Figure 1. Front Elevation View.

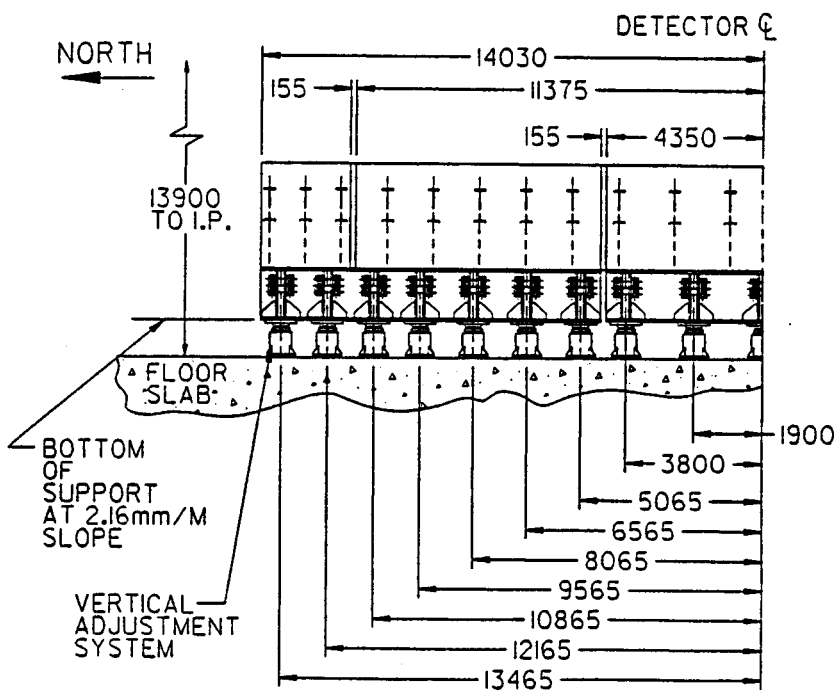

Figure 2. Side Elevation View.