SSCL-Preprint-130

SSCL-Preprint-130

Superconducting Super Collider Laboratory

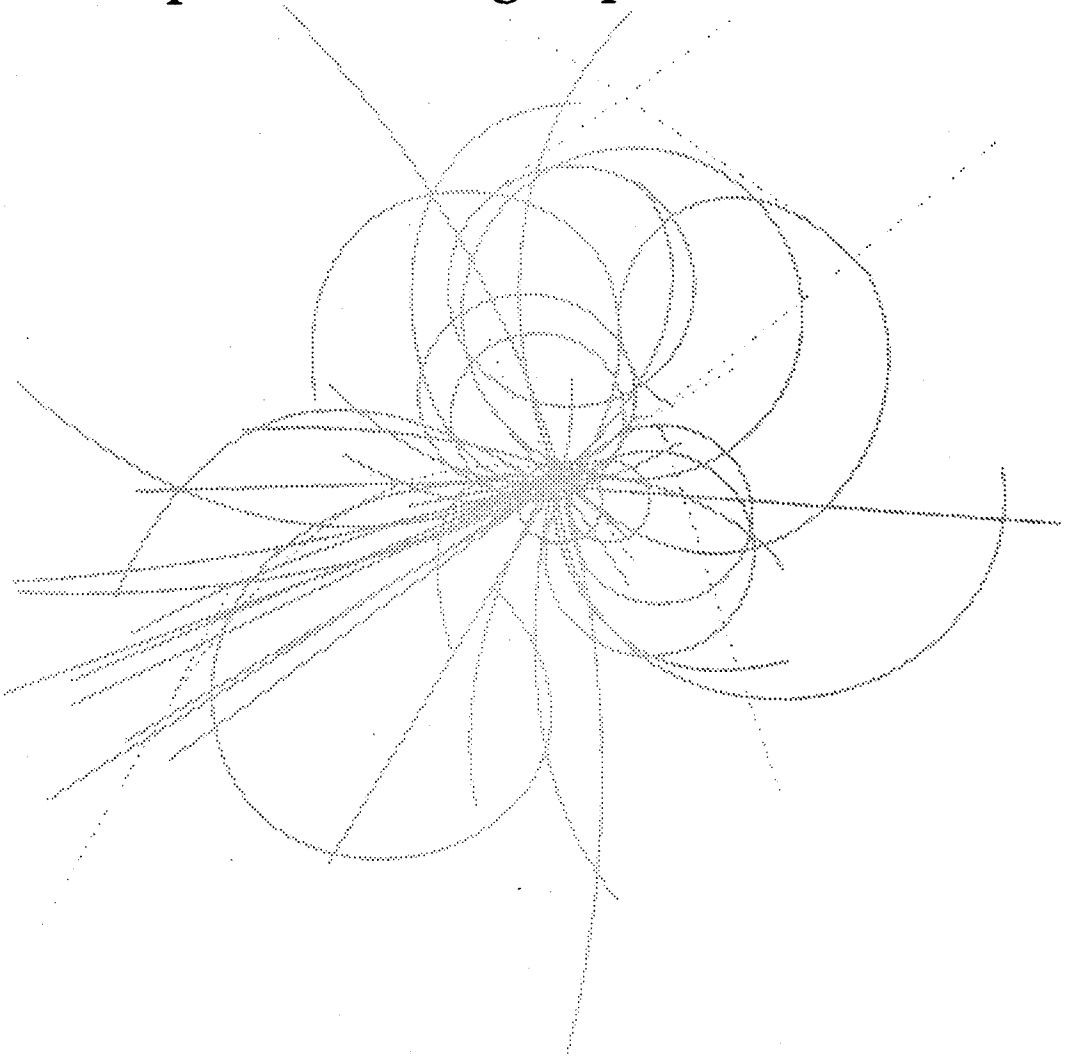

Design of Main Dipoles and Quadrupoles for the SSC Low Energy Booster

V. Thiagarajan, X. Wu, R. York,
R. Schlueter, and K. Halbach

July 1992

SSCL-Preprint-130

Design of Main Dipoles and Quadrupoles for the SSC Low Energy Booster*

V. Thiagarajan, X. Wu, R. York,
R. Schlueter, and K. Halbach

Superconducting Super Collider Laboratory†
2550 Beckleymeade Ave.
Dallas, TX 75237

July 1992

*Presented at XVth International Conference on High Energy Accelerators, July 20–24, 1992, Hamburg, Germany.

†Operated by the Universities Research Association, Inc., for the U.S. Department of Energy under Contract No. DE-AC35-89ER40486.

DESIGN OF MAIN DIPOLES AND QUADRUPOLES FOR THE SSC LOW ENERGY BOOSTER

V. Thiagarajan, X. Wu, and Richard York

Superconducting Super Collider Laboratory*
2550 Beckleymeade Ave., MS-1042
Dallas, Texas 75237-3997

and

Ross D. Schlueter and K. Halbach

Lawrence Berkeley Laboratory†
1 Cyclotron Road
Berkeley,CA 94720

ABSTRACT

The Low Energy Booster (LEB) is a synchrotron which accelerates bunches of protons from a momentum of 1.2 GeV/c at injection to a momentum of 12.0 GeV/c at extraction. The main bending dipoles with a peak field of 1.3 Tesla and the main focussing and defocussing quadrupoles with a peak gradient of about 14.9 Tesla/m operate on the same power supply which ramps up sinusoidally from a current of 0.1 times the peak value at injection to the peak current in a 10 Hz cycle. The ratio of the gradient of the quadrupole to the field strength of the dipole should be constant during the current cycles in order to avoid a tune shift. Also, the magnets have to be designed to achieve the prescribed field quality and keep the multipoles within certain limits so as to keep the emittance growth during the acceleration to a minimum. This paper describes the design of the LEB dipoles and quadrupoles designed with this criteria.

1 INTRODUCTION

The design of dipoles and quadrupoles is described in this paper. The electrical power supply provides current varying from 0.1 times the peak value to the peak value in a cycle of 10 Hz, and is a major cost component. The cost of the resonant power supply increases with the energy stored in the magnet, which in turn increases with the pole width. Hence, the magnets are to be designed to stringent field specifications, keeping the pole width as small as possible and operating the magnets on the same power supply. The dipoles and the quadrupoles are also required to track during the acceleration cycle; *i.e.*, the ratio of the field gradient of the quad to the bending field of the dipole should be maintained constant (within permissible deviations). There will be eddy currents induced during the cycle and the magnets are to be designed to minimize the eddy current effects. The design of these magnets is briefly described here. Complete details of design can be found in [1].

* Operated by the Universities Research Association, Inc., for the U.S. Department of Energy under Contract No. DE-AC35-89ER40486.

† This work supported by the U.S. Department of Energy under Contract No. DE-AC03-76SF00098.

2 THEORY

The LEB magnets will operate in iron-dominated, resistive regimes. The field in the aperture of the magnet can be described by the gradient of a scalar potential V or as the curl of a vector potential $\vec{A} = \hat{k}\, A$. Both A and V satisfy the Laplace equation. The solution for the complex potential $F = A + iV$ as a function of $Z = x + iy$ is [2]

$$F(Z) = \sum_{n=1}^{\infty} a_{N(2n-1)} \left(\frac{Z}{g}\right)^{N(2n-1)} . \qquad (1)$$

In the preceding equation, the pole gap is 2g; N=1 for dipole, N=2 for quadrupole, N=3 for sextupole etc. At the pole $(\frac{Z}{g})^N = i$, and the potential at the pole V is given by

$$V\big|_{pole} = a_N - a_{3N} + a_{5N} - a_{7N} + ... \qquad (2)$$

In Eq. (2),a_N is the fundamental and a_{3N} etc. represent the harmonics. In theory, the pole face could be designed with suitable bumps to nullify the harmonics. Using Ampere's circuital law along a closed loop around the source with current density J (assuming a medium of infinite permeability around the loop except for the space between the poles which has a permeability μ_o), yields,

$$\int B.dr = \mu_o\,(IN_m) \qquad (3)$$

In Eq. (3), I is the current per conductor and N_m is the number of turns. The magnetic efficiency η, which is the ratio of actual and ideal fields can be shown [1] to be:

$$\textit{Magnetic efficiency}\ \eta = \frac{a_N}{\mu_o\,(IN_m)} . \qquad (4)$$

3 TRACKING

In the case of the dipole, let the source current be I per turn, the number of turns $=N_d$ and the gap between the pole pieces = 2g. Then the field for the ideal dipole can be obtained by integrating Eq. (3) around the source with infinite permeability everywhere but for the pole gap. The result is

$$B_d = \frac{N_d I \mu_o}{g} . \quad (5)$$

The field for the same magnet when the infinitely permeable medium is replaced by one with finite permeability is given by the following equation through the definition of the efficiency η_d for the dipole.

$$B_d = \frac{N_d I \mu_o}{g} \eta_d . \quad (6)$$

We can obtain the gradient for the quadrupole with an aperture radius r in a similar fashion by integrating Eq. (3) and also using the fact that the quadrupole field varies linearly with the radius. The result is

$$B'_q = \frac{2 N_q I \mu_o}{r^2} \eta_q . \quad (7)$$

In Eq. (7) B'_q is the gradient of the quadrupole and N_q is the number of turns. The efficiency η_q of the quad was introduced to describe the field reduction from the ideal magnet. From Eqs.(6) and (7),

$$\frac{B'_q}{B_d} = \frac{2N_q}{N_d} \frac{g}{r^2} \frac{\eta_q}{\eta_d} . \quad (8)$$

We see from Eq. (8) that $\frac{\eta_q}{\eta_d}$ has to be constant through the cycle for $\frac{B'_q}{B_d}$ to be constant. Also, B'_q and B_d are not independent.

4 INITIAL SPECIFICATIONS FOR THE MAGNETS

The current for the magnets varies as follows in a 10 Hz cycle:

$$I = I_{max}(0.55 + 0.45 Sin(\phi)) \quad (9)$$

where the time t in secs. and the phase angle ϕ in degrees are related as follows:

$$t = 0.025(1.0 + \frac{\phi}{90.0}) . \quad (10)$$

The gap between the pole pieces of the dipole is to be 5.72 cm in order to accommodate an elliptical beam pipe of 7.3 cm × 5.5 cm (or its variations within these dimensions). The peak field of the dipole is 1.3 Tesla. The variations of the field should satisfy the following quality criterion:

$$\frac{\Delta B}{B} \leq 10.^{-4} \quad for\ radius = \pm 2.5 \text{ cm}. \quad (11)$$

The quadrupole is to have a gradient around 15.0 Tesla/m and its aperture radius will be 5.0 cm. The permissible field variations are specified in the following quality criterion:

$$\frac{\Delta B}{B} \leq 10.^{-3} \quad \text{for radius} = \pm 2.0 \text{ cm}. \quad (12)$$

Further, the dipole and the quadrupole operate on the same electrical bus and draw the same current. They are required to track each other during the current cycle with the following criterion:

$$\frac{\Delta \frac{\eta_q}{\eta_d}}{\frac{\eta_q}{\eta_d}} \leq 10^{-3} \quad (13)$$

The preceding are initial specifications and they will be iteratively changed such that the emittance growth characteristics computed with particle tracking codes fall within acceptable ranges.

5 DESIGN PROCEDURE

The magnets were designed with the codes Poisson and MIRT [3]. The code PE2D [4] was used to check the results and also calculate the eddy currents. The material will be silicon steel (grade M27). The B-H characteristics for material 3 from the code Poisson will be used to describe this material. Also the dipole has to have the minimum required pole width in order to minimize the energy stored and the cost of electrical components. The magnets will be designed to keep the efficiencies η above 98% during the current cycle. Such a design will limit the variations in $\frac{\eta_q}{\eta_d}$ during the cycle and tracking will be easier.

Since the efficiencies are well above 98% their ratio is approximately equal to 1.0. Therefore using Eq. (8),

$$\frac{B'_q}{B_d} \approx \frac{2N_q}{N_d} \frac{g}{r^2} . \quad (14)$$

With the dipole field specified to be 1.3 Tesla, 2g=5.72 cm and r=5.0 cm, $\frac{N_q}{N_d}$ =1/2 in order to achieve a quadrupole gradient of 14.87 Tesla/m; this figure is near the required value of 15.0 Tesla/m. The choice of N_q *and* N_d is dictated by engineering concerns such as winding the coil, overhang etc. We will choose $N_q = 4$ and therefore, $N_d = 8$.

The current density J is usually decided from a balance of capital and operating costs [5]. We will use a J_{rms} = 4.0 amps/mm^2 for the dipole and J_{rms} = 5.0 amps/mm^2 for the quadrupole. These values approximately coincide with the values of the current density for cost minimization [5] and they stem from experience.

We will design the quadrupole first (Fig. 1) with high efficiencies and design the dipole later to track the efficiencies of the quadrupole at all levels of excitation. The pole profile will be hyperbolic with a shim at the end to improve the field quality. The parameters β, α, l_1, l_2, and w were varied to accommodate four conductors (23 mm × 21.9 mm) and to keep the efficiency above 98%. The details of evaluation of these parameters can be found in [1].

We determined earlier that we needed eight conductors in the dipole carrying the same current as each conductor in the quad. It was found convenient from an engineering point of view to have eight pairs of conductors, each pair carrying the same current (in parallel) as a single conductor in the quad. We will choose 16 conductors 21 mm × 18 mm with a 9.0 mm hole in the center for the water passage. With this choice the rms current density in the dipole is approximately 4.0 amps/mm^2. A schematic diagram of the dipole is shown in Fig. 2. The approximate half pole width can be determined from a formula given by Halbach[2]. It is calculated to be 5.5 cm for a good field region of 2.5 cm and a half pole gap of 2.86 cm.

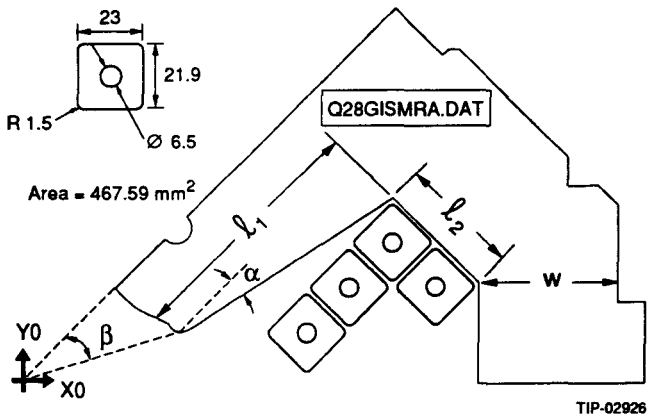

Figure 1: LEB quadrupole

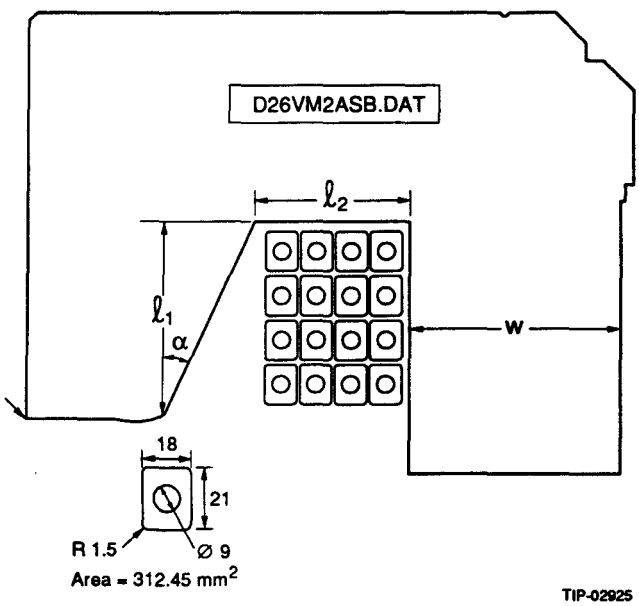

Figure 2: LEB dipole

We will use a half pole width of 6.0 cm for the first trial. The lengths l_1 and l_2 will be determined by the size of the coil package and the necessary insulations and clearances. The angle α and the yoke width w can be adjusted with a few trials such that the efficiencies of the quad and the efficiencies of the dipole at injection and extraction are within about 0.01%. The dipole was shimmed using the code MIRT using the option to optimize simultaneously at injection and extraction. Final adjustments were made by adjusting the yoke width w to match the efficiencies of the quad and the dipole as closely as possible at eight different points between injection and extraction. The maximum difference in efficiencies (of the quadrupole and dipole) was about 0.04% at injection and about 0.41% at an excitation of 1.1 times the peak current. Further details of tracking and design can be found in [1]. The resulting field distributions and harmonics from Poisson were used for particle tracking using the code Dimad [6].

Particles with different normalized emittance ϵ_N were tracked for 1000 turns, and the relative emittance variation $\frac{\Delta\epsilon}{\epsilon} = \frac{\epsilon_{max}-\epsilon_{min}}{\epsilon_{average}}$ was calculated during the process. Quadrupole and sextupole systematic errors were also included in the tracking. The results for a dipole with half pole width of 6.0 cm were compared with expected characteristics for a perfect machine for both horizontal and vertical planes at extraction and injection. The emittance growth was found to be far beyond tolerable limits.

The pole half width was increased in steps of 1.5 mm and the design and tracking procedure were repeated till the field harmonics and emittance growth were acceptable. The pole half width for the final iteration was 7.2 cm and the shimming was done using MIRT by using the option to optimize the shim simultaneously at injection and extraction. The iterations were stopped with a pole half width of 7.2 cm; this resulted in a good field region of 3.25 cm at injection and 1.5 cm at extraction.

The efficiencies of the quadrupole and the dipole at excitations varying from 0.1 times the peak value to 1.1 times the peak value are shown in Table 1. The tracking is well within specifications for currents varying from 0.1 times the peak value to about 0.95 times the peak value.

The code PE2D was used to do calculations for eddy currents during the current cycle. These runs were also used as a check for our calculations with Poisson. A packing factor of 0.97 was used in the Poisson runs while a packing factor of 1.0 was used in the PE2D runs. The field quality obtained with PE2D was better than that obtained with Poisson. Further details can be found in [1].

Table 1. Efficiencies and Deviations

$\frac{NI}{NI\|_{ext}}$	η_q%	η_d%	$B, Tesla$	$\frac{\frac{\eta_q}{\eta_d}\|_{inj}-\frac{\eta_q}{\eta_d}}{\frac{\eta_q}{\eta_d}\|_{inj}}$
1.1	96.78	97.19	1.417	4.6E−3
1.0	98.17	98.34	1.303	2.1E−3
0.95	98.6	98.63	1.242	7.0E−4
0.9	98.88	98.82	1.179	−2.E−4
0.85	99.06	99.01	1.115	−6.1E−4
0.8	99.17	99.07	1.050	−6.0E−4
0.5	99.41	99.33	0.658	−4.E−4
0.1	99.14	99.10	0.131	0.0

Note: The NI has been normalized by 15 083.1 ampere-turns for the quad and 30166.2 ampere-turns for the dipole.

Acknowledgements

The authors thank G. E. Fischer, Roger Zink and Warner Heilbrunn for many helpful discussions spanning a wide range of magnet design aspects.

References

[1] Thiagarajan, V., Wu, X., York, R., Schlueter, R. D., and Halbach, K., "Design of the Main Dipoles and Quadrupoles for the SSC Low Energy Booster," SSCL-568, March,1992.

[2] Halbach, K., Insertion Device Design, Sixteen lectures presented from October 1988 to March 1989, Report No. v-8811-1.1-16, Lawrence Berkeley Laboratory, Berkeley, CA

[3] Reference Manual for the Poisson/Superfish Group of Codes, LA-UR-87-126, Los Alamos National Laboratory, Los Alamos, NM 87545

[4] PE2D Reference Manual, Version 8.2, Vector Fields Inc., 1700, North Farnsworth Avenue, Aurora, Illinois 60505.

[5] Fischer, G. E., "Iron Dominated Magnets," AIP Conference Proceedings 153, Volume Two, American Institute of Physics, New York 1987.

[6] Servranckx, R., Brown, K., Schachinger, L., and Douglas, D., "Users Guide to the Program Dimad," SLAC Report 285 00-28