SSCL-Preprint-99

SSCL-Preprint-99

Superconducting Super Collider Laboratory

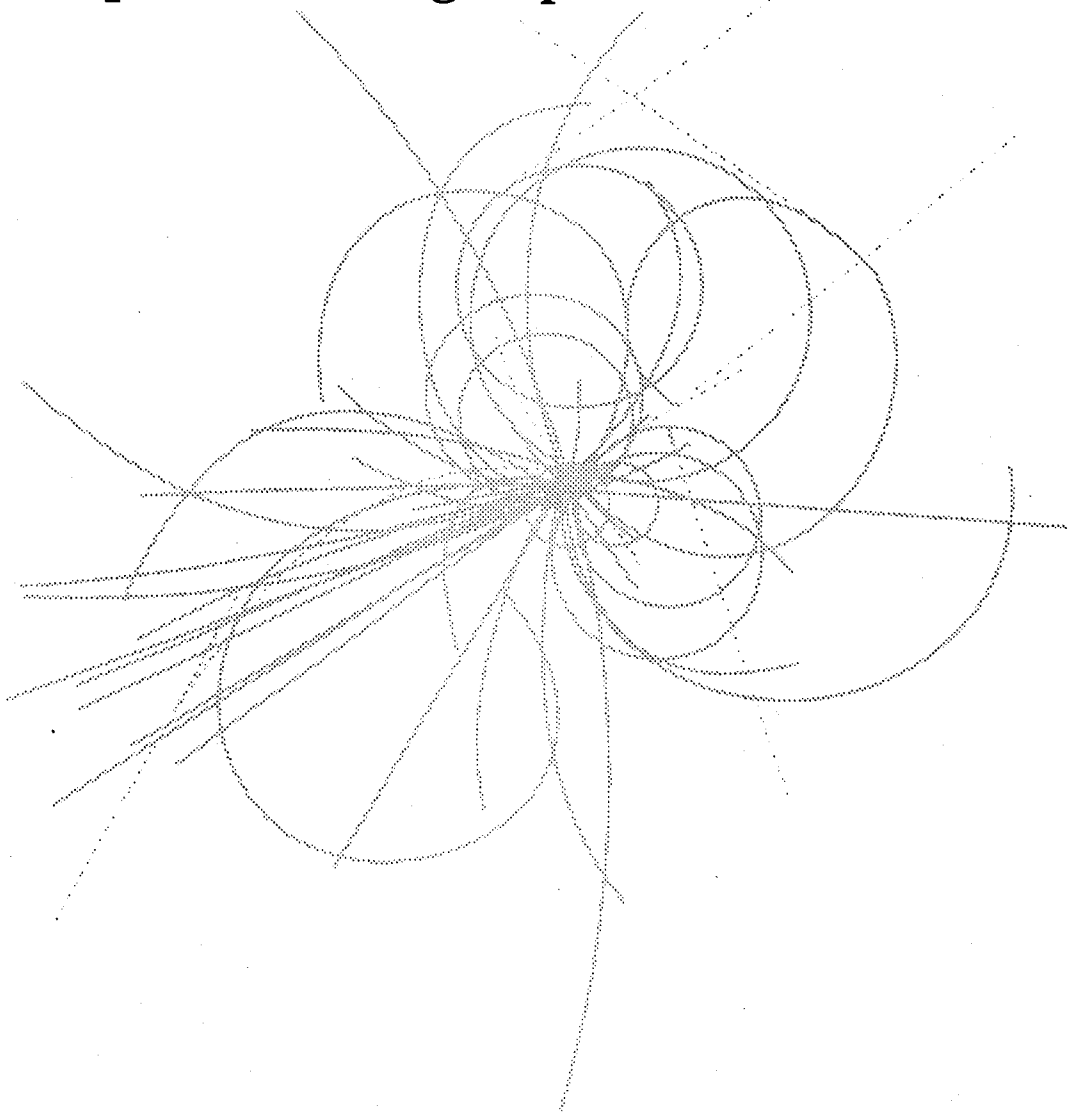

The SSC Linac: Status of Design and Procurement Activities

L. W. Funk

March 1992

To be published in *Supercollider 4*

SSCL-Preprint-99

The SSC Linac: Status of Design and Procurement Activities*

L. W. Funk

Superconducting Super Collider Laboratory†
2550 Beckleymeade Ave.
Dallas, TX 75237

March 1992

---

*Presented at the International Industrial Symposium on the Super Collider, New Orleans, March 4–6, 1992.

†Operated by the Universities Research Association, Inc., for the U.S. Department of Energy under Contract No. DE-AC35-89ER40486.

THE SSC LINAC: STATUS OF DESIGN AND PROCUREMENT ACTIVITIES

L.W. Funk

Superconducting Super Collider Laboratory*
2550 Beckleymeade Avenue
Dallas, TX 75237

ABSTRACT

The Linear Accelerator[1,2] (Linac) is the first element in the injector chain for the Superconducting Super Collider (SSC). It must be operational by October 1995 in order to commission the Low Energy Booster (LEB). The physics design of the Linac is now essentially complete, detailed engineering is well advanced, and manufacturing has begun. This paper will review the physics design with emphasis on recent significant improvements, summarize mechanical design and construction status, and describe recent achievements in the development program.

INTRODUCTION

The top-level technical requirements for the SSC Linac are given in Table 1. To assist with understanding of the more detailed descriptions which follow, Figure 1 shows a block diagram of major Linac subsystems and their interrelationships.

ION SOURCE AND LOW ENERGY BEAM TRANSPORT

The ion source must take hydrogen gas and, in a plasma, break up the molecules and attach a second electron to some of the hydrogen atoms, forming H^- ions. These ions are then electrostatically extracted from the plasma and accelerated into the Low Energy Beam Transport (LEBT). The voltage chosen for the SSCL ion source is 35 kV. To make up for unavoidable losses and emittance growth in the accelerator chain, the ion source must produce 30-mA beam pulses with a normalized rms transverse emittance $\leq 0.18\ \pi$ mm•mrad. The ion source pulse length will be 100 μs, and provision will be made in the LEBT to switch the best part of this pulse into the rest of the Linac for acceleration.

*Operated by the Universities Research Association, Inc., for the United States Department of Energy under Contract No. DE-AC35-89ER40486.

Table 1. SSC Linac Main Technical Requirements.

Parameter	Value
Particle	H^-
Output Energy	600 MeV*
Output Current	25 mA
Pulse Length	2–35 μs
Pulse Repetition Frequency	10 Hz
Output Transverse Emittance (n, rms)	≤ 0.3 π mm•mrad
Output Energy Spread	≤ 100 keV
Basic radio frequency	427.617 MHz†
Scheduled availability (Collider filling)	≥ 98.8%

*Ability to upgrade to 1 GeV must be preserved.
†9th harmonic of LEB injection rf preserves bunch-to-bucket transfer option.

Historically, ion sources have proved to be one of the principal sources of unscheduled downtime, so a long-term development program has been started to improve source reliability and maintainability. Two technical options are being studied: the magnetron source,[3] and the volume source.[4,5]

The main characteristics of the magnetron source are 1) it utilizes a magnetic field, transverse to the arc electric field (a "magnetron" configuration) to maximize the efficiency with which the plasma is generated; 2) H^- ions are created on the surfaces, defining the plasma volume, when plasma protons strike the surface and pick up two electrons; and 3) a thin layer of cesium, with its low work function, is plated onto the ion-producing surface to increase the probability of picking up two electrons. This technology is very attractive, since it is in operation at both Fermi National Accelerator Laboratory (FNAL) and Brookhaven National Laboratory (BNL), and there is considerable technical support available. It represents our main line of attack. There are two main difficulties with the magnetron source: 1) over time, the cesium also plates out on other parts of the system, reducing voltage holdoff capability and leading to sparking, and 2) the source requires several days of conditioning to achieve satisfactory levels of stability and reliability.

A magnetron source, constructed with the assistance of the Texas Accelerator Center (TAC), has been operational on a development test stand at SSCL since late 1990, and considerable progress has been made in understanding and overcoming some of the problems associated with operation of a cesiated source. Its performance has been quite encouraging. We have been able to reproduce the low-cesium, low-breakdown-rate mode of operation utilized at FNAL and BNL. At the end of 1991, we completed a 15-day continuous run at design current and voltage during which a transverse, normalized rms emittance of 0.12 π mm•mrad was measured.

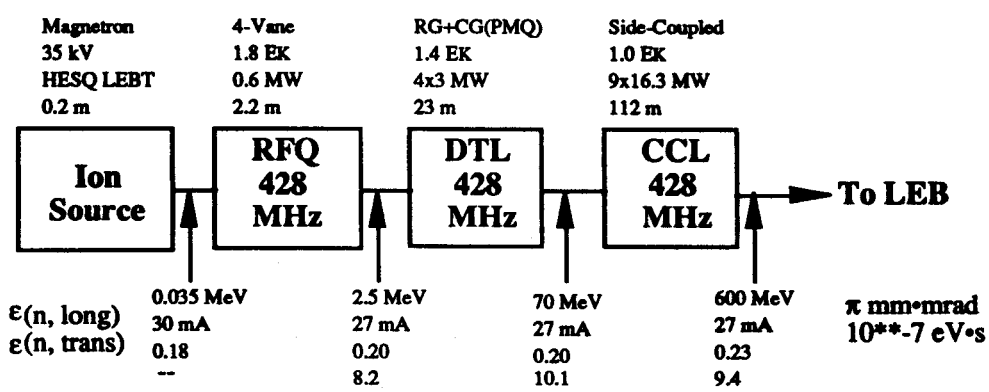

Figure 1. Block Diagram of Major Linac Subsystems.

The main characteristics of the volume source are 1) the plasma is generated by a high-power rf discharge. A magnetic filter separates the plasma volume into a high-temperature region, where ionization takes place in the rf fields, and a low-temperature region, where slower-moving electrons are re-attached to protons and hydrogen atoms throughout the volume to create the ions, which are then electrostatically

extracted from the production zone; 2) it does not require cesium, so that commissioning times are shorter, and operation is more stable; and 3) the low-temperature of the source region implies that lower emittances are possible, and indeed, some have been measured below 0.1 π mm•mrad. The two main difficulties of the volume source are that it requires significantly higher gas pressures, posing problems for the vacuum system, and that large quantities of electrons are also extracted, often more than 20 times the ion current, which is both a power supply and a beam transport problem.

An rf volume source, built under contract by Lawrence Berkeley Laboratory (LBL), passed acceptance testing at the end of 1991 and is now in the process of being installed in a development test stand at SSCL. An emittance measuring system is being assembled for long-term testing of this source.

The characteristics of the ion source beam are not such as to allow immediate injection into the next acceleration device, the Radio Frequency Quadrupole (RFQ). A short section of transport line, designed to match the beam from the ion source into the RFQ, is required. This matching section, the LEBT, is a critical element of the first sections of the Linac, and two distinct technical approaches are being studied.

The first of these is the classic Einzel lens.[6] The advantage of this solution is its relative simplicity. It can be segmented to provide a beam steering or switching capability. Its disadvantage is that it is weak focusing, requiring voltages approaching the beam voltage in decel. mode, and up to twice the beam voltage in accel. configuration. A decel. Einzel lens has been built with the assistance of TAC. In preliminary tests at SSCL, the lens showed signs of considerable aberration, in general agreement with simulation. Further tests are planned, and LBL has proposed a variation of an accel. configuration, the "ring" lens,[7] which shows promise of improved performance.

The second approach is a Helical ElectroStatic Quadrupole (HESQ),[8] which offers the advantage of stronger focusing (lower voltages) and intrinsic steering capability. Its disadvantage is that it is relatively more difficult to align. A version has been built, once again with the assistance of TAC; preliminary tests have been reasonably consistent with simulation, but once again with considerable emittance growth, thought in this case to be due to serious misalignment. Further tests are planned.

RFQ AND RFQ/DTL MATCHING SECTION

Table 2 gives the main technical characteristics of the RFQ, which is being constructed by Los Alamos National Laboratory (LANL) and is on schedule for delivery to the SSCL by August 1, 1992. The four-vane structure is made up of two 1.1-m-long sections. The vanes for each section were separately machined and are being electroformed together to form the rf and vacuum envelope. Detailed design of all remaining mechanical components of the resonant assembly is well advanced. Special end walls, incorporating thin vacuum isolation valves, tuning stubs, and provision for instrumentation are being designed at SSCL.

Table 2. RFQ Technical Characteristics.

Parameter		Value
Frequency		427.617 MHz
Energy:	Input	35 keV
	Output	2.5 MeV
Design Nominal Current:	Input	30 mA
	Output	28 mA
Design Peak Current:	Input	70 mA
	Output	50 mA
Transverse Emittance (n, rms):	Input	≤0.20 π mm•mrad
(at nominal current)	Output	≤0.20 π mm•mrad
Longitudinal Emittance (rms):	Output	8×10^{-7} eV•s
Length		2.20 m
Maximum Peak Surface Electric Field		36 MV/m (1.8 E_K)
Total Peak rf Power		355 kW

The rf power system, based on that used for the Ground Test Accelerator (GTA), is also being constructed at LANL, largely by SSCL staff. Acceptance tests are scheduled to take place at LANL before the middle of March. Low-level rf systems and supervisory controls are based on the GTA designs and have been delivered to the SSCL. Design of remaining subsystems, such as support stands, vacuum pumps and gauges, instrumentation, and the temperature control system, are in detailed design. All elements of the RFQ are scheduled to arrive at SSCL this summer, with the intent of operating the unit in temporary quarters in the Central Facility at Waxahachie. Preparation of SAR documents in support of an application for operating approvals has begun.

The change in longitudinal and transverse focusing properties between the RFQ and the Drift Tube Linac (DTL) necessitates an intervening matching section. The physics design has been completed for this matching section, which consists of two buncher cavities ($E_0TL = 214$ kV) and four movable (± 2 mm), variable-gradient (50 T/m ≤ |G| ≤ 100 T/m, $\int|G \cdot dl| \leq 4$ T), permanent magnet quadrupoles, plus space for a limited amount of instrumentation; and mechanical design has begun. The engineering approach chosen calls for an outer shell to provide the vacuum envelope, as this appears to offer the prospect of making more space available on the beamline for essential components and instrumentation. Specifications for the quadrupoles are in preparation and have been completed for the rf amplifier systems for the bunchers. We are attempting to achieve delivery of the completed matching section during the summer of 1993.

DRIFT TUBE LINAC AND DTL/CCL MATCHING SECTION

The main technical specifications of the DTL[9] are given in Table 3. The contract for fabrication of the DTL tanks was awarded to AccSys Technology, Inc., in October 1991, for delivery starting in late 1993. The order for the 4-MW klystrons for the DTL was also placed in late 1991 with the Thompson Tubes Electronique division of Thompson CSF, with delivery of the first klystron scheduled for November 1992. The specification of the line-type modulators for the klystrons is complete, and the bid package has been issued. Final date for bid submission is set for early April, and it is hoped that the award can be placed shortly thereafter. Preparation of specification and requirements documents for the balance of the DTL subsystem has begun. Our schedule calls for start of DTL commissioning in February 1994.

Table 3. Drift Tube Linac Technical Specifications.

Parameter		Value
Frequency		427.617 MHz
Number of tanks		4
Input Energy		2.5 MeV
Design Nominal Current		25 mA
Design Peak Current		50 mA
Transverse Emittance (n, rms)	Input	≤0.20 π mm•mrad
(at nominal current)	Output	≤0.20 π mm•mrad
Drift Tube Diameter		80 mm
Bore Diameter		16 mm
$\int\|G \cdot Dl\|$		4.64 T
rf Pulse Length/Pulse Repetition Frequency		100 μs/10 Hz

Tank #	Length (m)	# Drift Tubes	# Post Stabilizers	Gradient (MV/m)	E_{out} (MeV)	Power (MW)
1	4.515	55+2/2	27	2.423–4.600	13.364	1.00
2	5.951	39+2/2	39	4.600	32.766	1.75
3	6.062	29+2/2	29	4.600	51.491	2.00
4	6.230	25+2/2	25	4.600	70.149	2.00

Once again, there are major changes in the longitudinal and transverse fields to which the beam is exposed as it transits between the DTL and the Coupled-Cavity Linac (CCL), and a matching section is required to ensure smooth handling of the beam and minimization of emittance growth. The DTL/CCL

matching section design is not yet complete, but its major features have become clear. It will consist of six electromagnetic quadrupoles ($|G| \leq 40$ T/m) and two buncher resonators. The bunchers will operate at 1282.851 MHz, the same frequency as the CCL. The total voltage (E_0TL) required from the second buncher is about 40% larger than that required from the first, but by making tank length proportional to the voltage it is required to develop, we can make both buncher cavities have the same response to transient beam loading, thus allowing the two bunchers to be driven from a single rf source.

The schedule for delivery of the components of the DTL/CCL matching section is spring of 1994.

COUPLED-CAVITY LINAC

The most fundamental design changes that have taken place in recent months have been those that have affected the CCL. (See Table 4 for the main technical specifications.) The original design[10] aimed at low cost and high reliability through proven technology, a low DTL-CCL transition energy, and conservative design. The event that led to the changes was the discovery of unacceptable levels of higher multipoles in the field of the RFQ. It was possible to modify the RFQ design to correct the problem, but the solution was constrained by the manufacturing approach and led to an unavoidable increase in longitudinal emittance. Since longitudinal emittance is blown up by several orders of magnitude during adiabatic capture in the LEB, this was not considered a serious defect, and the design was accepted. It was later discovered, however, that the combination of an increased longitudinal emittance and the design of the CCL conspired to greatly increase the transverse emittance growth in the CCL, to the extent that we would not have been able to achieve the low growth factors implied by the values in Figure 1. While reviewing the design to reduce emittance growth, we attempted to find ways to further reduce the cost.

A number of changes resulted from this effort:

1. All tanks were redesigned to have the same number of cells. This eliminated a biperiodicity in longitudinal focusing.
2. The number of cells per tank was reduced. Since all cells in a given tank are designed for the same value of $\beta = v/c$ (for ease of manufacture), there is an unavoidable phase slip through each tank. The shorter tanks have less slip and therefore reduce the exposure of the beam to non-linear rf defocusing forces that lead to emittance growth.
3. Division of each module into 8 tanks, rather than 6, provided more opportunities for installation of focusing magnets, which reduced the average beam size and further reduced the non-linear rf defocusing forces. This allowed a reduction in the diameter of the beam bore hole and an increase in the cavity shunt impedance.
4. The ramped gradient in the first two tanks of module 1 was not found to be essential for low emittance growth and was eliminated, which also slightly increased the acceleration efficiency of the CCL.
5. Intermodule spaces were made identical with local intertank spaces, which further smoothed both longitudinal and transverse lattices. The loss of diagnostic space implied by this was compensated for by the addition of small diagnostic spaces between tanks.
6. Details of the cavity geometry were modified to improve the shunt impedance and ratio of peak-to-average electric field for the high-β cavities.
7. Side coupler dimensions were modified to minimize variations in the air-vacuum frequency shift and to reduce peak surface fields.
8. The cell-to-cell coupling constant was increased from 5% to 6.8% to reduce problems anticipated in driving long coupled structures. This reduced the anticipated shunt impedance.
9. The above reconfigurations and efficiency improvements/reductions, combined with a modest reduction in the rf power safety factor, were sufficient to enable us to eliminate one klystron stand, for a considerable cost saving.

Table 4. CCL Technical Specifications.

Paramenter		Value
Frequency		1282.851 MHz
Number of modules × Number of tanks/module		9 × 8
Design Nominal Current		25 mA
Design Peak Current		50 mA
Transverse Emittance (n, rms)	Input	≤0.20 π mm•mrad
(at nominal current)	Output	≤0.20 π mm•mrad
Beam Bore Diameter		20 mm
Peak Power Required/Available		16.3/20 MW
Peak Surface Electric Field		32 MV/m (1.0 E_K)
rf Pulse Length/Pulse Repetition Frequency		70 μs/10 Hz

Final cavity geometries have been determined for module 1, and detailed engineering design is underway. Our plan is that all the CCL tanks, bridge couplers, waveguide adapters, windows, and mechanical support stands will be provided by the Institute of High Energy Physics (IHEP), Beijing, under the terms of an international agreement. Several members of the IHEP staff have worked at the SSCL on the design and engineering of the CCL. Manufacture of the first four tanks of module 1 will serve to qualify their manufacturing capability. We will have the remaining tanks of module 1 manufactured locally, to provide a backup position. All of module 1 is to be complete by the end of 1992, and the remaining modules are scheduled for delivery by IHEP at the rate of one module/month, starting in early 1993.

The quadrupole magnets, about 100 of which are required, are part of a package of contributions being planned by the Centre for Advanced Technology, Indore, MP, India. A mechanical engineer from the Indian institute has been invited to SSCL to assist with final design.

TRANSPORT/TRANSFER LINE[11]

The Linac facility has been designed so that space is reserved for a future upgrade of the Linac energy to 1000 MeV, should this be the most cost-effective way of improving the Collider luminosity. The line required to conduct the beam from the 600-MeV point to the nominal 1000-MeV point is called the Transport Line. This line gradually transforms the transverse optics to those required for the Transfer Line that follows, and it provides a location for the Energy Compression (EC) cavity. The 600-MeV beam emerging from the CCL has an energy spread of about 0.5 MeV. Injection into the LEB requires an rms energy spread of only about 0.1 MeV, so after sufficient drift to translate energy differences into phase differences, a buncher cavity is installed that reduces the energy spread. The design of the EC cavity will follow closely that of the final tank in the CCL. The quadrupoles will be provided by India as an international contribution, and design is well advanced.

The Transfer Line is being designed to conduct the beam from the Linac to the LEB, to place it on the closed orbit and strip it, or to transfer it to the various beam dumps, as necessary. Provision has been made in the transfer line for instrumentation to measure both longitudinal and transverse characteristics of the beam.

Power supplies, dipole and quadrupole magnets, vacuum systems, and support stands are being specified and designed.

CONTROLS AND BEAM INSTRUMENTATION

The master schedule calls for commissioning and operation of the Linac before the Global Accelerator Control Systems will be available to support it. In addition, installation and commissioning of Linac subsystems is naturally handled in a modular fashion. Finally, the supervisory controls for the rf systems will handle more than half the total control and monitor points in the associated Linac module. As a result, a controls architecture has been developed that provides local supervisory intelligence for each module, based on rf supervisory controls.[12-15] Lab-wide communication facilities and protocols are then used to tie these modules into a functional Linac structure, and ultimately to tie the Linac into the rest of the Injector Complex. The first test of this approach will come with the commissioning of the RFQ during the latter part of 1992.

Emittance preservation puts extremely taxing demands on low-level rf controls, system alignment, and beam diagnostics. The first low-level rf control system that will be used to attempt to achieve the tight phase

and amplitude tolerances for cavity fields (±0.5°, ±0.5%) is the so-called "I and Q" system,[16,17] which derives in-phase and quadrature error signals for application to the input rf signal. We are presently developing detailed plans for commissioning that will use specialized relocatable diagnostics elements for accurate initial set-up, and for calibration of a more restricted set of diagnostics that will be available during routine operation. The designs of all systems are being constrained to provide as much access to the beam as possible. Actual population of these access ports with instruments will be determined by available funds and operational needs.

BUILDINGS AND FACILITIES

Title II design of the conventional facilities is complete, and the design has been sent out for bid. We anticipate award of the construction contract in late May, and beneficial occupancy by the end of April 1993. We are including features that will permit the servicing of a proton radiotherapy facility by 70–250 MeV beams from the Linac during periods when we are not filling the LEB.

REFERENCES

1. J. Watson, "The SSC Linac," *Proceedings of the 1990 Linear Accelerator Conference*, September 10–14, 1990, Albuquerque, NM, LA-12004-C, pp. 31-35.
2. J. Watson et al., "Design of the SSC Linac," *Proceedings of the 1991 Particle Accelerator Conference*, May 6-9, 1991, San Francisco, CA, 88-647453, 91CH3038-7, pp. 572–74.
3. C.W. Schmidt and C.D. Curtis, "A 50 mA Negative Hydrogen Ion Source," *IEEE Trans. Nucl. Sci.*, NS-26 (3), 4120 (1979)
4. K.N. Leung et al., "Optimization of H^- Production from a Small Multicusp Ion Source," *Rev. Sci. Instrum.* 60(4), 531 (1989).
5. K.N. Leung et al., "Optimization of the RF Driven H^- Ion Source,", *Proceedings of the 1991 Particle Accelerator Conference*, May 6-9, 1991, San Francisco, CA, 88-647453, 91CH3038-7, pp. 1919–21.
6. C.R. Chang, "Design Studies of SSC Low Energy Beam Transport System Using Einzel Lenses," *Proceedings of the 1990 Linac Conference*, September 10-14, 1990, Albuquerque, NM, LA-12004-C, pp. 399–400.
7. O.A. Anderson et al., "Low-Energy Injector Design for SSC," *Proceedings of the 4th International Conference on Ion Sources*, Sept. 30-Oct. 4, 1991, Bensheim, Germany, in press.
8. D. Raparia, "HESQ A Low Energy Beam Transport for the SSC Linac," *Proceedings of the 1990 Linac Conference*, September 10-14, 1990, Albuquerque, NM, LA-12004-C, pp. 405–7.
9. G.H. Neuschaefer et al., "SSC Drift Tube Linac Physics Design," *Proceedings of the 1990 Linac Conference*, September 10-14, 1990, Albuquerque, NM, LA-12004-C, pp. 351–4.
10. C.R. Chang et al., "Design Studies of SSC Coupled Cavity Linac," *Proceedings of the 1991 Particle Accelerator Conference*, May 6-9, 1991, San Francisco, CA, 88-647453, 91CH3038-7, pp. 2993–5.
11. R.K. Bhandari, E. Seppi, and S. Penner, "Design Characteristics of the Linac–LEB Transfer Line for the SSC," *Proceedings of the 1991 Particle Accelerator Conference*, May 6-9, 1991, San Francisco, CA, 88-647453, 91CH3038-7, pp. 351–3.
12. G. Martinsen et al., "Initial Control of the H^- Ion Source at the Superconducting Super Collider Laboratory," *Proceedings of the 1991 Particle Accelerator Conference*, May 6-9, 1991, San Francisco, CA, 88-647453, 91CH3038-7, pp. 1365–7.
13. Kewisch et al., "Accelerator Simulation and Operation via Identical Operational Interfaces," *Proceedings of the 1991 Particle Accelerator Conference*, May 6-9, 1991, San Francisco, CA, 88-647453, 91CH3038-7, pp. 1443–5.
14. A.J. Kozubal, D.M. Kerstiens, J.O. Hill, and L.R. Dalesio, "Run-Time Environment and Applications Tools for the Ground Test Accelerator Control System," *Proceedings of the International Conference on Accelerator and Large Experimental Physics Control Systems*, Vancouver, BC, Canada, Oct. 30–Nov. 3, 1989.
15. W.H. Atkins, G.D. Vaughn, and C. Bridgman, "An Automated Vacuum System," *Proceedings of the 1991 Particle Accelerator Conference*, May 6-9, 1991, San Francisco, CA, 88-647453, 91CH3038-7, pp. 1522–4.
16. S.P. Jachim, "Some New Methods of RF Control," *Proceedings of the 1990 Linac Conference*, September 10-14, 1990, Albuquerque, NM, LA-12004-C, pp. 573–7.
17. C.D. Ziomek, S.P. Jachim, and E.F. Natter, "Design of a Multivariable RF Control System Using Gain-Shaping in the Frequency Domain," *Proceedings of the 1991 Particle Accelerator Conference*, May 6–9, 1991, San Francisco, CA, 88-647453, 91CH3038-7, pp. 1329–31.