Fermi National Accelerator Laboratory

FERMILAB-Conf-92/81
(SSCL-Preprint-81)

# Construction Experience with Fermilab-Built Full Length 50mm SSC Dipoles

R. Bossert, J. Brandt, J. Carson, S. Delchamps, K. Ewald, H. Fulton, J. Haggard, R. Jensen, W. Koska, R. Rihel, W. Robotham, B. Smith, D. Smith, J. Strait, G. Tassotto, D. Tinsley, M. Wake, M. Winters and W. Zimmerman

*Fermi National Accelerator Laboratory*
*P.O. Box 500, Batavia, Illinois 60510*

M. Gordon, W. Higinbotham and R. Sims

*SSC Laboratory*
*2550 Beckleymeade Ave., Dallas, Texas 75237*

M. Blessing, D. Hoffman and M. Packer

*General Dynamics, Space Systems Division*
*P.O. Box 85990, M/Z DC-9540, San Diego, CA 92186-5990*

March 1992

Presented at the *Fourth Annual IISSC Conference*, New Orleans, LA, March 4-6, 1992.

Operated by Universities Research Association Inc. under Contract No. DE-AC02-76CHO3000 with the United States Department of Energy

## Disclaimer

*This report was prepared as an account of work sponsored by an agency of the United States Government. Neither the United States Government nor any agency thereof, nor any of their employees, makes any warranty, express or implied, or assumes any legal liability or responsibility for the accuracy, completeness, or usefulness of any information, apparatus, product, or process disclosed, or represents that its use would not infringe privately owned rights. Reference herein to any specific commercial product, process, or service by trade name, trademark, manufacturer, or otherwise, does not necessarily constitute or imply its endorsement, recommendation, or favoring by the United States Government or any agency thereof. The views and opinions of authors expressed herein do not necessarily state or reflect those of the United States Government or any agency thereof.*

# CONSTRUCTION EXPERIENCE WITH FERMILAB-BUILT FULL LENGTH 50MM SSC DIPOLES

M. J. Blessing[3], R. C.Bossert[1], J. S.Brandt[1], J. A. Carson[1], S. Delchamps[1], K. D.Ewald[1], H. J. Fulton[1], M. Gordon[2], J. E.Haggard[1], W. Higinbotham[2], D. E.Hoffman[3], R. H. Jensen[1], W. Koska[1], M. D.Packer[3], R. K.Rihel [1], W. F. Robotham[1], R. Sims[2], B. E. Smith[1], D. J. Smith[1], J. B. Strait[1], G. Tassotto[1], D. A. Tinsley[1], M. Wake[1], M. Winters[1], and W. F. Zimmerman[1].

[1] Fermi National Accelerator Laboratory, P.O. Box 500, Batavia, Ill. 60510

[2] Superconducting Super Collider Laboratory, Fermilab/SSC Magnet Project, P.O. Box 500, Batavia, Ill. 60510.

[3] General Dynamics, Space Systems Division, P.O. Box 85990, M/Z DC-9540, San Diego, CA 92186-5990

## ABSTRACT

Fourteen full length SSC dipole magnets are being built and tested at Fermilab. Their purpose is to verify the magnet design as well as transfer the construction technology to industry. Magnet design is summarized. Construction problems and their solutions are discussed. Topics include coil winding, curing and measuring, collaring, instrumentation, end clamp installation, yoking and electrical and mechanical interconnection.

## INTRODUCTION

A series of long 50mm SSC dipoles are being constructed at Fermilab. Magnet design is described in detail in References 1,2, 3 and 4. Special tooling is used to build the magnets as well as take measurements during assembly. This paper describes both the production methods used to build these magnets and the measurements taken during construction. Some analysis of the measurements is included. Organization will be in order of construction.

The magnets being built are numbered DCA310 through DCA323. The first three, DCA310 through DCA312, are built by Fermilab. The next seven magnets, five of which will be used in a string test at the SSC Laboratory, are built by General Dynamics personnel at Fermilab. The final four, DCA320 through DCA323, will be built by Fermilab. Ten of the magnets, DCA310 through DCA319 have been completed to date. DCA311 through DCA316 have been tested.

## CABLE

The cable used for the 50mm dipoles is multistrand keystoned cable similar to that used in the 40mm SSC dipoles[5]. It is being supplied to Fermilab by the SSC Laboratory.

The keystone angle on the inner cable used in the 50mm SSC magnets, although within specification, has been systematically at the low end of the tolerance limit. As a result, the azimuthal pressure on the coils during both curing and collaring has been much higher on the inside surface (near thin edge) of the cable than on the outside. Small amounts of damage to the glass tape have been observed on these surfaces as a result. Although this inconsistency in coil preload creates a higher risk for quenches and turn-to-turn shorts, it has not been responsible for any known magnet problems.

## CABLE INSULATION

The cable insulation system used on the long dipoles is identical to that used in the 40mm dipole program. It consists of one layer of .025 x 9.5 mm kapton overlapped by 50% surrounded by one layer of .10 x 9.5 glass tape wrapped with 90% coverage. The glass tape is impregnated with 15-20% B-stage epoxy by weight. This is slightly higher than the amount used on 40mm dipoles. Epoxy bonds in the coils produced with the lower epoxy content occasionally cracked in the 40mm coils. Although no known magnet performance problems resulted from these cracks, the epoxy content was raised as a precautionary measure.

## WINDING

Coil winding is a semi-manual operation. Operators form the cable around the winding keys by hand while the table moves into the proper position. Tension is automatically kept at 310 N for both inner and outer long coils. The winding tensioner has an accuracy of ±13 N. Tensions vary depending on cable size, coil length and the type of winding mechanism. Specific tensions used represent a compromise between adequate placement of end parts, straight section sag, cable mechanical stability and coil springback. Final tensions used are determined on the production floor by trial and error.

Cable mechanical stability limits the upper level of tension on both inner and outer 50mm long coils. If the tension exceeds 310 N, "decabling", or the unraveling of strands from their keystone shape, begins to occur. This 310 N limit is true only for the specific winding machine used for SSC long coils at FNAL. The point at which decabling occurs depends upon the specific geometry of the winding mechanism. The angle at which the cable is directed toward the winding mandrel, distance from the reel of cable to the mandrel and the number of degrees of freedom of motion allowed by the assembly all affect the permissible winding tension. The table which was used for the 50mm dipoles has only four degrees of freedom of motion, one less than is recommended for winding the coil ends. Use of a different winding machine may result in different tension requirements.

The lower limit of tension on long coils is determined by the positioning of the end parts during winding. If tension is too low, the end parts will be spaced too widely in the longitudinal direction, resulting in inadequate compaction of the end windings. Even though hydraulic pressure is applied to the ends during curing, it has little effect beyond the outermost current block. It is impossible to get the parts properly positioned unless they are placed correctly during the winding process.

Coil springback after being removed from the curing mold also becomes increasingly more important as the tension is increased. Springback is undesirable because it causes coil length to vary and because the epoxy bonds between coil components can become broken when the coil contracts. The amount of springback is proportional to both the magnitude of the tension and coil length. Long 50mm SSC coils springback by approximately 12mm ±1.5 and 19mm ±1.5 for the inner and outer coils respectively.

## WEDGES

Solid copper wedges are placed between current blocks. They are insulated in the same manner as the cable and placed into the coils by hand during the winding operation. Since none of the wedges lie radially with respect to the magnet bore, their ideal configuration should be nonsymmetrical. If the wedges are made symmetrical, a portion of the coil will be left uncovered as shown in Figure 1. At issue is the advantage of the simplified assembly of the symmetrical wedge vs. the possible disadvantages of leaving a portion of the cable unsupported. All wedges in the inner coil are symmetrical. Production began using a nonsymmetrical outer wedge, since the unsupported area created by using a symmetrical wedge in the outer coil exceeds .15mm. This wedge is marked by the manufacturer to prevent inserting it backwards. Two wedge related problems have been encountered.

1.) The inner coil wedge nearest the parting plane has a very large angle and must rotate significantly in the mold to be pushed into position. It scrapes against the retainer, causing damage to both the retainer and wedge insulation. One solution to this problem has been to insulate the wedges with kapton only. The lower friction surface of the kapton does not then become damaged or cause damage to the retainer. Short coils have been cured with wedges insulated only with kapton. No damage to retainer or insulation have occurred. In addition coil size variations were significantly smaller (≈ .07 vs. ≈ .15 mm peak-to-peak) than in the coils with glass tape insulating the wedges.

2.) The outer (nonsymmetrical) wedge has by design a .15mm difference between the length of the two surfaces. Manufacturing errors in this wedge have caused them to vary from the design to perfectly symmetrical. In addition a mark which is supposed to identify the longer side has not been placed accurately, causing some wedges to be placed into coils with the wrong orientation. As a result we have incorporated a symmetrical wedge on the outer coil. It was determined that the .15mm uncovered area would not create a problem.[6] No performance problems have resulted.

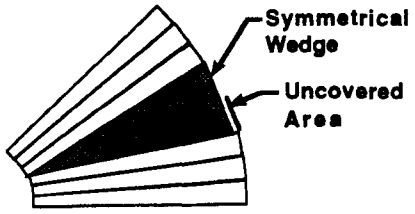


**Figure 1.** Symmetrical Wedge

Coil end parts are designed and manufactured according to a geometry created by computer programs at Fermilab.[3] These programs attempt to minimize the internal stresses in the cable at the coil ends. The parts are also designed to minimize the magnetic effects of the ends. Shapes are completely defined to support manufacturing, analysis and winding requirements.

End part placement is largely determined by proper positioning of the parts during the winding operation. The parts are then further compressed into position during curing by applying hydraulic loads to the ends of the coil during the curing process. Experiments were done in the short program to determine the magnitude of the end pressure.[7] Various end pressures were tried and a compromise was drawn between placement of end parts, insulation damage on ends and effect of end pressure on coil azimuthal size near the ends. 13300 N was chosen as the longitudinal end force during curing. Ends generally compress longitudinally to within less than 3mm of their design value. The ends do not compress fully because of local changes in the cross-sectional shape of the cable.[8] Two types of changes have been observed. The cable becomes "unkeystoned" due to internal stresses caused by bending the cable. The top (thick) edge becomes thinner while the bottom (thin) edge becomes thicker. The midplane thickness can also increase due to the inability to apply enough end pressure to properly seat the parts without damaging the cable insulation. The end part design has been changed to adapt to the local changes in cable shape.

## CURING

Fermilab coils are cured in a closed cavity mold (see Figure 2).[9] Four variables are manipulated during the curing process: three independent sets of cylinders and temperature. The mandrel cylinders apply a radial load to the coil through the mandrel. The platen cylinders apply the azimuthal load to the coil through the sizing bars. End cylinders apply a longitudinal load to each end of the coil. Temperature is increased to 135°C while the cylinders apply loads which close the cavity. The sequence between the three loads and temperature of the mold is provided by computer input to the press and is shown in Figure 3. The position of the sizing bars determines the azimuthal coil size and is set by stops on the curing mold.

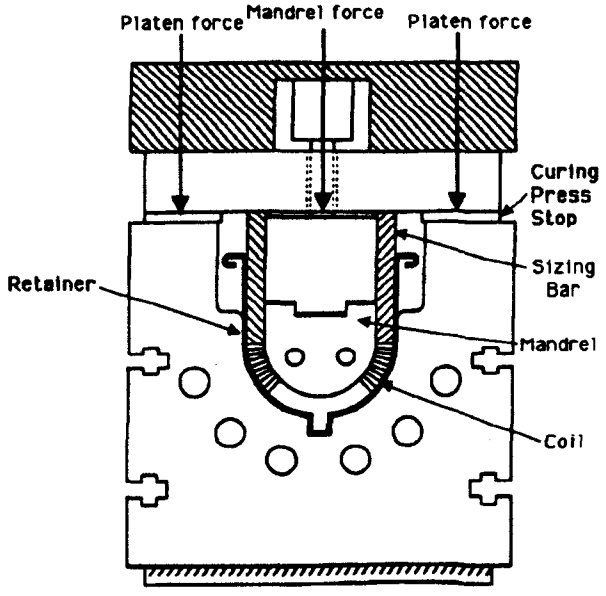


**Figure 2.** Curing Mold

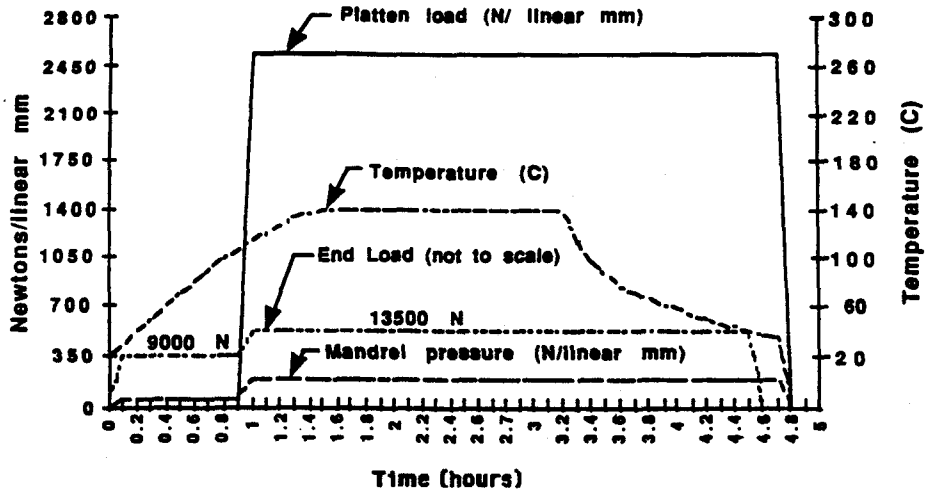


**Figure 3.** Press parameters

The hydraulic system applies a load of 2300 N per linear mm to the lower tooling during the curing process (platen load minus mandrel load). This is equivalent to an azimuthal pressure of 90 MPa on the inner coils and 95 on the outers. Only a fraction of this load is actually applied to the coils during curing. This fraction is determined by measuring the pressure at which the mold cavity closes, i.e., the point at which the tooling begins reacting to the hydraulic forces. Measurements using pressure sensitive tape ("Fuji film") on the azimuthal coil surfaces indicate that the coils are subjected to azimuthal pressures in the curing mold of 55-70 MPa before heating and 27-35 MPa after the coil has been cured.

## COIL MEASURING

Azimuthal, radial and longitudinal measurements of each coil are taken after curing. Azimuthal measurements are used to determine the ultimate preload of the coil and to verify that the coil is dimensionally consistent. All measurements compare the coil with a steel master of the correct size.

Most of the azimuthal measurements on 50mm SSC coils were done on a semi-automatic fixture. The coil is placed into the fixture by hand, hydraulic pressure is applied to the coil and readings are taken with an LVDT. Control of the hydraulic pressure as well as the measurements are done by a computer. Some coils late in the project were measured with a fully automatic fixture developed at FNAL[10]. All functions, including the linear motion of the machine along the coil, are automatically controlled.

Measurements of coil azimuthal sizes are used to predict preload. Coil mean sizes must be kept within certain upper and lower boundaries to achieve the proper preload. Coil preload for SSC dipoles needs to be maintained within a target window of 55-85 MPa for the inner coil and 40-70 MPa for the outer coil at room temperature. It has become clear, however, that the coil sizes and pressures "as measured" do not yield the absolute preloads expected in assembled magnets as read by internally placed strain gages. It is unknown whether these discrepancies are caused by measuring fixture deflections or some other source. Nevertheless consistent relationships exist between measured values and magnet preloads. This makes it possible to use the measurement data to predict preload by comparing the preloads of completed magnets to the measured coil sizes. Later coil sizes are then adjusted by appropriately changing the curing mold cavity stops at the positions shown in Figure 2. This process led to the conclusion that the desired measured coil size is .23mm larger than the master for inners and .03mm smaller than the master for outers.[11] Both inner and outer coils are consistently being produced with mean sizes which yield preloads within the target window. Figures 4 and 5 show the average sizes of inner and outer long coils and the curing cavity stop size for those coils. The cavity stop size represents the size of the mold cavity with respect to nominal.

The size variations can be divided into "horizontal" and "vertical" errors.[12] The mathematical difference between the left and right coil sizes is defined as the horizontal error. The remaining coil size error is called the vertical error and is evident when the right and left coil sides increase or decrease together. Figure 6 shows an individual coil "overall" azimuthal size measurement. Figure 7 displays the deviations from the coil mean size broken down into their horizontal and vertical components. Study of many coils indicates that most vertical errors can be directly attributed to tooling variations. Horizontal errors appear to be random but can possibly be reduced by controlling the fit of the tooling slot. Lowering the coefficient of friction between the tooling and coil (such as wrapping the wedges only with kapton) can also have a significant effect. Three distinct "valleys" appear on the coils. They appear to be related to the press rather than tooling because they appear on both inner and outer coils. Total size variations for both inner and outer coils are less than .15mm.

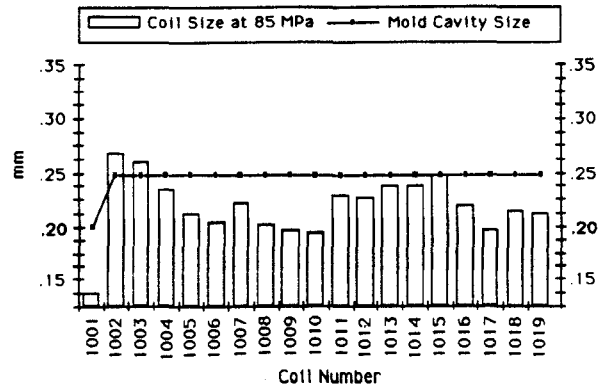


**Figure 4.** Inner Long Coil Sizes

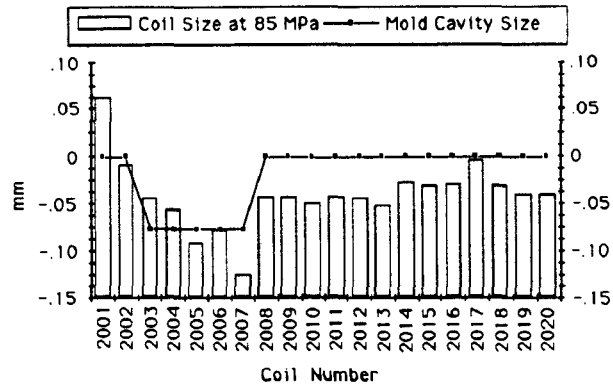


**Figure 5.** Outer Long Coil Sizes

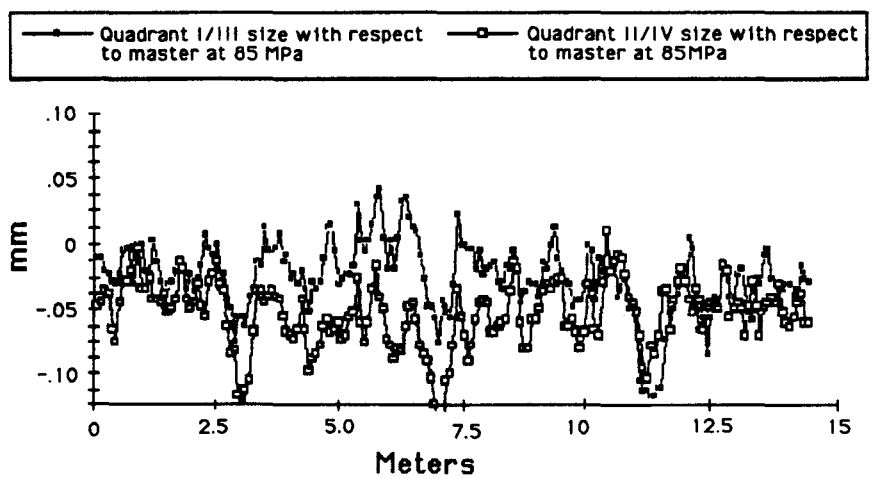


**Figure 6.** Coil Size

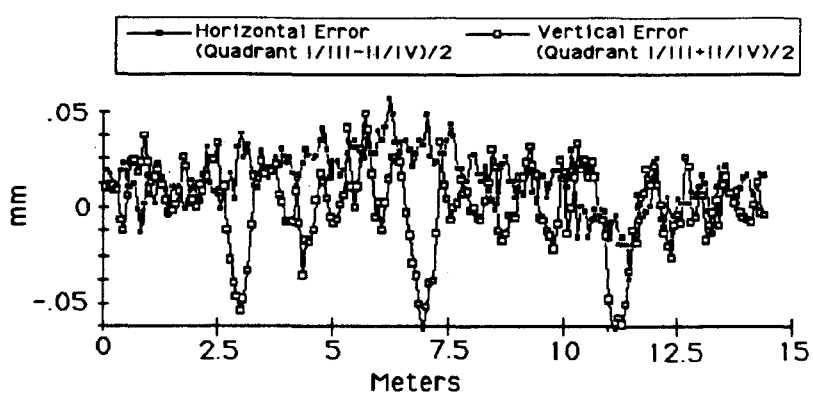


**Figure 7.** Horizontal and Vertical Errors

## COIL ASSEMBLY AND INSULATION

The coil insulation system in Fermilab SSC 50mm dipoles consists of several layers of .13mm kapton. "Collaring shims", traditional components of superconducting magnets, are not used. Collaring shims typically provide two functions: to protect the kapton insulation from the serrated edges of the collar and to provide a mechanism for preload adjustment. The 40mm SSC program has shown collaring shims to be unnecessary. Many 40 and 50mm magnets have been built and tested without indication of coil insulation deterioration. Fermilab is now building 50mm coils accurately and consistently. They do not require pole shim adjustment to obtain the proper preload.

The "collaring shoe", a .4mm thick sheet of brass which lies between the outer coil and the collars, was eliminated in the 40mm program but has been reintroduced in the 50mm models. The shoe serves two functions. It protects the kapton ground wrap from the serrated edges of the collar. It also provides a firm barrier to prevent the possibility of ground wrap breakdown if a large pressure differential occurs across the outer ground wrap. This could happen if an outer coil quenches in the area of an intermittent pocket in the collar lamination assembly.[5] These intermittent pockets are approximately 3mm wide and are placed at 3mm intervals. They result from the collar geometry and are unavoidable due to the design required for collar assembly.

It is uncertain whether collaring shoes are either necessary or sufficient to serve these functions. Certainly they are not needed to protect the serrated edges of the collar from the ground wrap. Over 750 Tevatron, two long and seven short 40mm SSC dipoles have been built and operated without the collaring shoe and have not exhibited performance problems. Experiments could be performed to determine whether they are necessary, but time did not permit them to be completed in the 50mm program.

Some performance problems may have resulted from the use of the collaring shoe. The shoe in the initial short model (DSA321) was too short, leaving a large portion of the pole turn of the outer coil unsupported radially. The first (and only) training quench in DSA321 was in this turn. It is possible that the quench was precipitated by the short collaring shoe.

## COLLARING

Fermilab magnets are collared using laminated collaring tooling (see Figure 8). The tooling consists of several components. They are: a laminated structure into which the collared coil is placed, a hydraulic system to drive in the tapered collaring keys, "key supporting bars" to support the tapered keys as they are being inserted into the collars and a transport mechanism to aid in rolling the tooling in and out of the press. The tooling is designed to operate in a "closed cavity" condition, i.e., collars are closed to a fixed dimension and the keys are inserted.

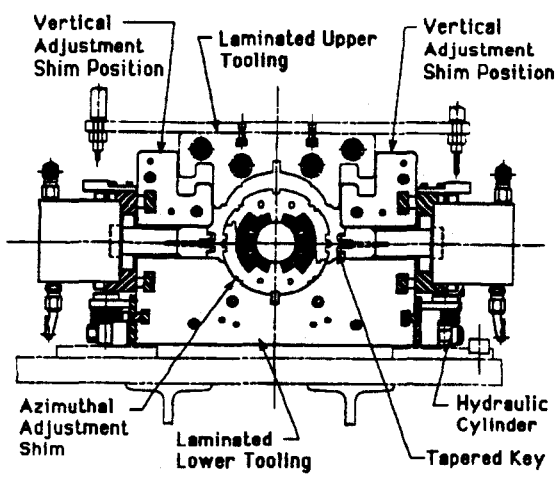


**Figure 8.** Collaring Tooling

The tooling provides for two different methods of collaring a coil, called the "tapered key method" and the "square key method". In the tapered key method a vertical load is applied until the collars are closed just enough to allow the tapered keys to engage. The rest is done by driving in the tapered keys. In the square key method the vertical load is applied with the press until the collars are completely closed. Very little side force is then needed to insert the keys. The advantage of the tapered key method is that a minimum amount of overcompression of the coils is necessary to collar the magnet. The square key method requires temporary higher preloads during collaring. The advantage of the square key method is that the keys are not damaged or "grooved" during collaring. A more consistent relationship between coil size and preload can therefore be

achieved. The Fermilab collaring tooling can be used to collar a magnet by either method. In addition, one can choose to use a "mixed method" by allowing the vertical and side cylinders to share the work.

Keying procedures for both short and long magnets were developed in the short magnet program.[13] Objectives of the development procedure are listed in Table 1.

**Table 1.** Keying Procedure Development Objectives

1. Optimize procedures to minimize peak coil stress in the collaring press. This is done by shimming the tooling to adjust the vertical press stop and to achieve proper azimuthal alignment of the upper relative to the lower collars. Positions of the vertical and azimuthal shims are shown in Figure 8.
   a. Primary method: set the keys in (square key method). Goal is to minimize the amount of overcompression required.
   b. Backup method: Drive the keys in (tapered key method). Goal is to minimize the side force, and consequently the deformation of the keys, required.
   c. "Mixed" method: Goal is to find a compromise which minimizes the negative effects of both methods.
2. Determine coil size and pole shim combination that gives prestress in the target window of 55-85 MPa for the inner coil and 40-70 MPa for the outer coil. This ultimately determines the coil size needed.

Short magnets were keyed and disassembled several times while changing pole shims, tooling shims and keying method. A summary of the results is shown in Table 2. A graph of the coil preload vs. press load during a key insertion chosen for the long magnet program is shown in Figure 9. This key insertion uses a "mixed method" which optimizes the advantages of both square and tapered key insertion.

**Table 2.** Keying Results

1. Full range of key insertion types has been covered by varying the press stop by .35mm.
2. Springback preload loss is approximately 28 MPa for the square key method and approximately 7 MPa using the full tapered key method (525 N/linear mm horizontal force used to insert keys).
3. Using full tapered key insertion the collar and key deformations result in vertical collared coil changes of approximately .04mm. This is not expected to have a large effect on field quality.
4. Final choice of press stop for long magnets is a mixed method requiring 175-350 N/linear mm horizontal force for key insertion. Springback is approximately 21 MPa.
5. Pole shim adjustment indicates that measured coil size to achieve the proper preload should be .23mm larger than the master for the inner coil and .03mm smaller than the master for the outer coil.

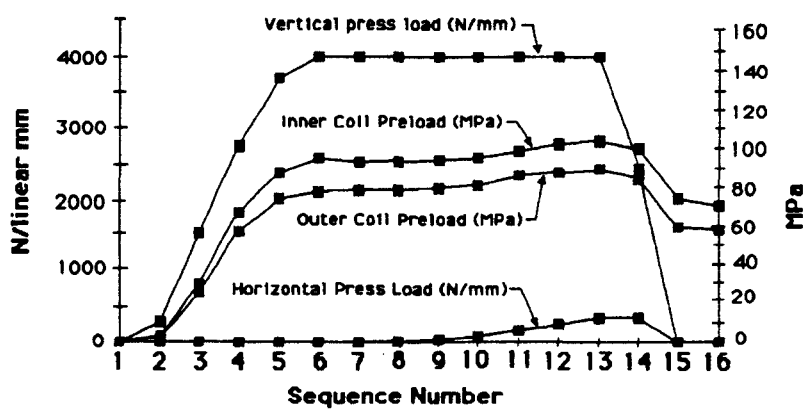


**Figure 9.** Collaring Procedure

Ten long and several short 50mm magnets have been collared and keyed to date using this method. No significant problems have occurred during the collaring process.

## END CLAMPS

The coil end and splices are enclosed in a collet style clamp assembly[4] shown in Figure 10. The lead end configuration is shown. The return end clamp is identical except that there are no splices. The coil is surrounded by a four piece G-10 collet. The collet is closed by driving on an aluminum tapered sleeve, thereby compressing the end sections of the coil. The assembly fixture has a capacity of 266000 N. Both inner-to-outer and upper-to-lower coil splices are made during this assembly step. All splices are compressed within the end clamp.

Experiments were done to develop a method of measuring the preload inside the end clamp.[14] Pressure sensitive "Fuji film" was used to measure the preload in a short magnet (DSA322) end clamp. The pressure applied to the film is determined by the degree of color apparent on the surface of the film. The film was first calibrated to ensure the accuracy of the pressures read on the film.[15] Four different measurements were made during assembly as an attempt to read externally the preloads inside the end clamp. They are: pressure required to close clamp, diameter of clamp at various angles and circumference of clamp (pi tape). Measurement positions are shown in Figure 10. All four of these values were plotted against the pressures read by the Fuji film. The pi tape vs. Fuji film is the only relationship which shows a clear correlation. Based on these measurements, end clamp preloads appear to be adequate, although slightly lower than in the magnet body.

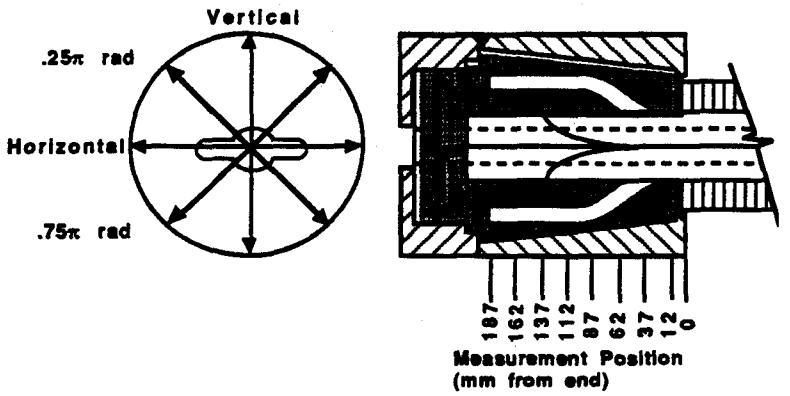


**Figure 10.** End Clamp Measurements

## YOKE

The collared coil in SSC 50mm magnets is surrounded by a 330mm diameter iron yoke. The yoke consists of 1.6mm thick low carbon steel laminations stacked into packs. The yoke pack layout is shown in Figure 11. There are three different types of packs. Standard packs are 3.5m long and are held together by 13mm diameter pins. The pins are flared on one end and welded to the final steel lamination on the other. "Monolithic" packs are placed at various positions throughout the pack assembly as shown. The laminations in these packs are coated with epoxy and cured while being compressed to create monolithic blocks which are highly resistant to shear. They are placed between standard packs to increase the column stability of the assembly. Other special yoke packs called "end filler packs" are placed around the end clamp area to prevent a large stress discontinuity in the shell at the ends of the yoked portion of the cold mass. They have no magnetic function. They are made of high manganese stainless steel which has a similar thermal contraction to that of low carbon steel but is non-magnetic.

The shell is made of full length 5mm thick stainless steel. The yoke and shell are placed around the collared coil, compressed and welded at the alignment keys. 2 kN/mm is applied to the shell exterior to close the vertical gap between the yoke packs.

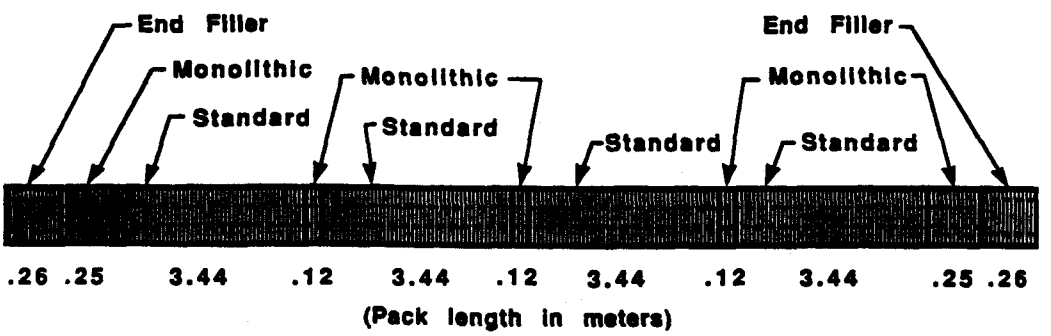


**Figure 11.** Yoke Pack Stacking Assembly

A vertically split yoke is used. The iron laminations are drawn onto the collars from the horizontal direction allowing the collared coil to be inserted easily into the yoke while still maintaining the appropriate horizontal interference necessary at room temperature.

When the completed magnet is cooled to helium temperatures, the yoke assembly contracts longitudinally as well as radially. The stainless steel shell contracts more than the iron yoke putting the shell into tension and the yoke into compression. Care must be taken that the "air gaps" between the yoke laminations are sufficiently large to allow the yoke to compress at least as much as the differential thermal contraction between the yoke and the shell. The "packing factor", or ratio between the steel volume and total

space within the yoke was chosen conservatively to be 98% for the 50mm dipoles.[16] This was estimated to provide 20 times the space needed for thermal contraction.

Experience with the early 50mm dipoles indicated that the unwelded yoke assembly did not have sufficient column stability to withstand the press loads without buckling.[17] The initial design, in addition to using a 98% packing factor, included monolithic packs only at each end of the cold mass. Yoke laminations in magnet DCA311, the first magnet yoked with this design, buckled severely near the center of the magnet. Shell diameters decreased by as much as .4mm in this area. The solution was to increase the packing factor to 99% and to add monolithic packs between each regular pack as shown in Figure 31.[18] Yoke buckling did not occur on subsequent magnets.

Strain gages are applied to the shell during magnet assembly for the purpose of measuring shell stresses during welding and testing. They are read in the yoke press before welding and after each pass. Shell tension after welding was estimated both from the shell gages[19,20] and from coil preloads.[21] Although the data is not in total agreement and is difficult to interpret, indications are that shell stresses are in excess of 180 MPa in the area near the alignment keys. This is sufficient to keep the vertical gap between the yoke halves closed during operation.

## FIELD ANGLE MEASUREMENTS

Measurements of the vertical plane of the magnetic field are taken of the completed cold mass.[22] These measurements indicate the degree of twist inherent in the assembly. Measurements for a "typical" cold mass (DCA313) are shown in Figure 12.

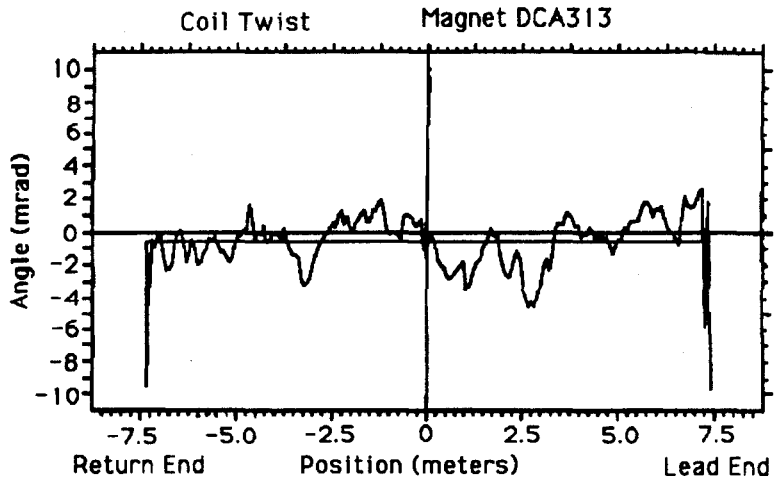


**Figure 12.** Field Angle Probe Measurements

## INTERCONNECTION

The cold mass interconnection area begins with a 38mm thick end plate. Four preload screws are mounted into the end plate which apply a longitudinal load to the coil through the end clamp. Total load applied to each end is 9000 N at room temperature. The area exterior to the end plate includes electrical connections for the power leads, strain gages, voltage taps, strip heaters, spot heaters and thermal sensors. All is enclosed by a stainless steel end dome which is welded to the shell. Primary mechanical components of the interconnection are shown in Figure 13.

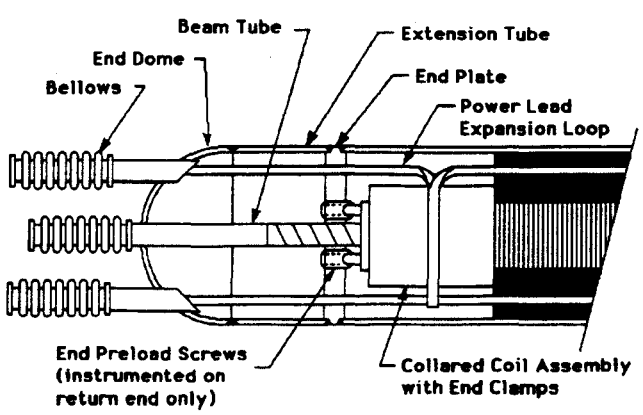


**Figure 13.** Interconnection Components

Problems developed while welding the end dome to the end plate.[23] The weld configuration is shown in Figure 14. The weld between the end plate and the dome extension tube was made very large to meet an ASTM pressure vessel specification. Heat from the welding process caused the end plate to deflect inward, increasing the end force exerted by the preload screws. The screws cannot be turned after welding. The extension tube was chamfered as shown, reducing the end plate deflections

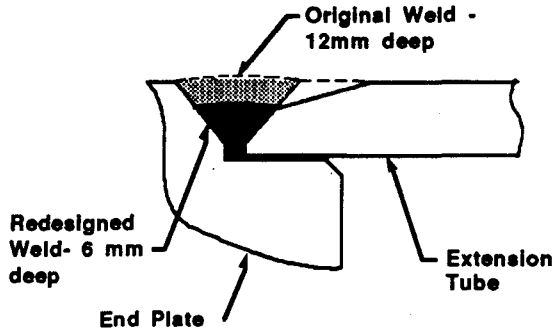


**Figure 14.** End Dome Weld

## CONCLUSION

Full length SSC 50mm dipoles have been produced successfully at Fermilab. The magnets are being tested and are operating within the criteria set for the ASST string test. Construction technology has been transferred to industry. The basic design has been determined and requires little but a few refinements. The dipole program is ready to enter the industrialization phase of development.

## REFERENCES

1. Gupta, R. C., et al., "SSC 50mm Dipole Cross Section, in Supercollider 3, p. 587, 1991, J Nonte, ed.
2. Strait, J., et al, "Mechanical Design of the 2D Cross Section of the SSC Collider Dipole Magnet, Proc. of the 1991 IEEE Particle Accelerator Conf., p. 2176 1991, L. Lizama and J Chew, eds.
3. Brandt, J. S., et. al., "Coil End Design for the SSC Collider Dipole Magnet", ibid, p. 2182 and Fermilab Technical Memo TM-1735.
4. Delchamps, S., et al., "SSC Collider Dipole Magnet End Mechanical Design", ibid, p. 2185.
5. Pewitt, E, ed., "50mm Collider Dipole Magnet Requirements and Specifications" (Yellow Book).
6. Strait, J., "Outer Coil Wedge - Symmetric or Asymmetric", Fermilab Technical Support Section internal note TS-SSC 91-144.
7. Brandt, J., "SSC Dipole End Pressure Experiments", TS-SSC 92-036.
8. Bossert, R., "SSC End Part Modifications", TS-SSC 91-042.
9. Carson, J., et al, "SSC Dipole Coil Production Tooling", Supercollider 1, p. 51, M. McAshan, ed.
10. Rihel, R. W., "Overview of a Robotic System for Azimuthal Dimensions of SSC Dipole Coils", these proceedings.
11. Wake, M., "Relationship between Coil size and Preloading in 50mm Magnets", TS-SSC 91-070.
12. Sims, R., "Tooling and Process Parameter Improvements Leading to Improved Dimensional Control of the Cured SSC Dipole Coils", Supercollider 3, p 57., J. Nonte, ed.
13. Strait, J., "Development of Collar Keying Procedures", TS-SSC 91-060.
14. Delchamps, S., "DCA311 - DCA319 End Clamp Deflections", TS-SSC 92-013.
15. Delchamps, S., "Calibration of Fuji Prescale Pressure Sensitive Film", TS-SSC 91-134.
16. Gordon, M., "Axial Compliance and Packing Factor for the Yoke of the 50mm SSC Dipole", TS-SSC 91-143.
17. Gordon, M., "Yoke Chevron Effects", TS-SSC 91-192.
18. Gordon, M., "50mm Dipole Revised Yoke Assembly", TS-SSC 91-169.
19. Strait, J., "DCA312 Shell Gage Data During Welding", TS-SSC 91-179
20. Strait, J., "DCA312 Shell Gage Data During Welding", TS-SSC 91-184.
21. Strait, J., "Estimate of Shell Tension from Coil Stress Data", TS-SSC 91-182.
22. Delchamps, S., et al., "Magnetic Field Measurements of Fermilab/General Dynamics built SSC Collider Dipole Magnets", these proceedings.
23. Higinbotham, B., "Welding End Bell Assembly to End Plate", TS-SSC 91-208.