SSCL-Preprint-76

SSCL-Preprint-76

Superconducting Super Collider Laboratory

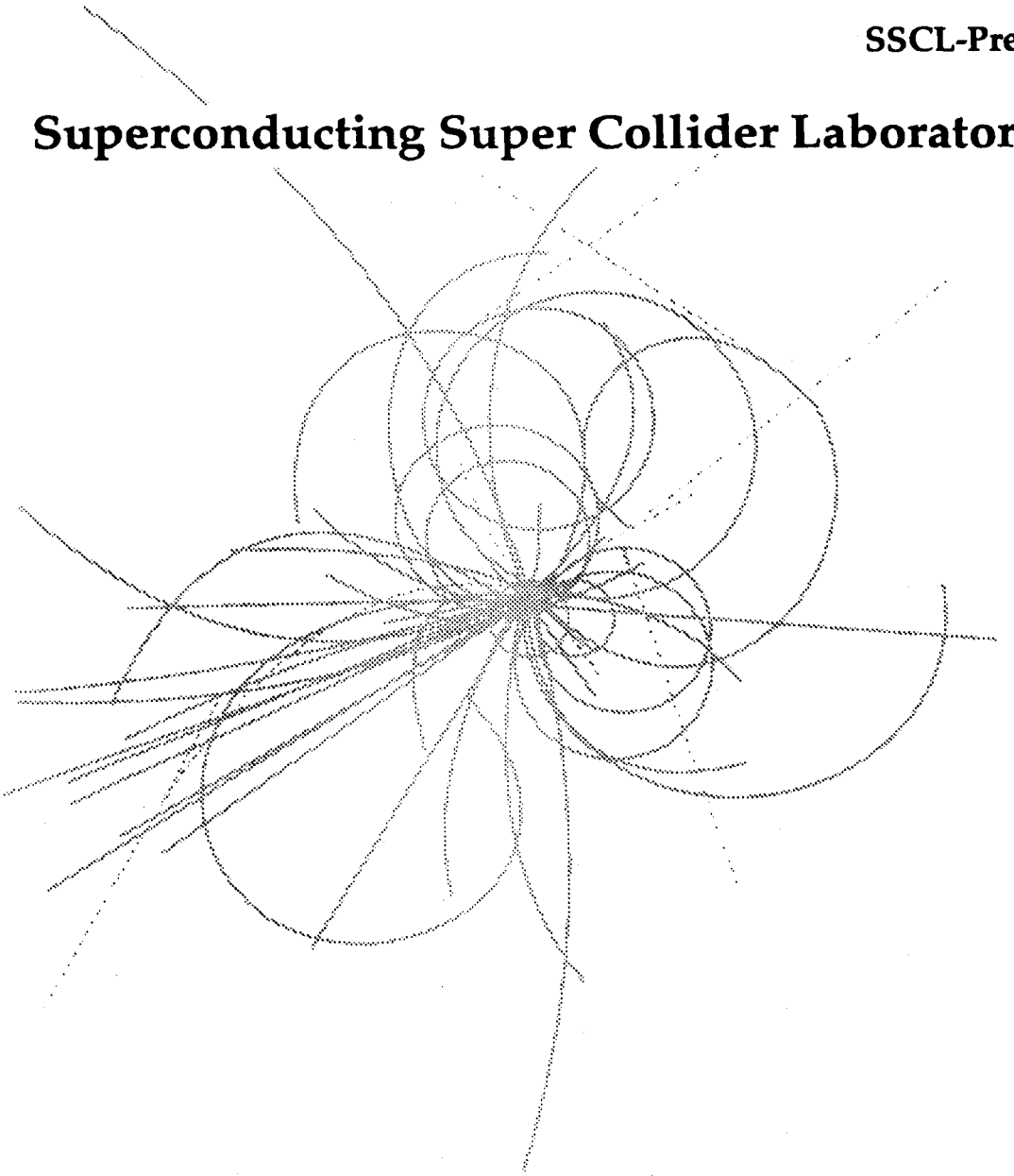

# A Time Domain Control Algorithm for Global RF Feedback Loops

L. K. Mestha, C. M. Kwan,
J. Mangino, and K. S. Yeung

March 1992

SSCL-Preprint-76

# A Time Domain Control Algorithm for Global RF Feedback Loops*

L.K. Mestha,† C.M. Kwan,‡ J. Mangino,† and K.S. Yeung‡

Superconducting Super Collider Laboratory†
2550 Beckleymeade Avenue
Dallas, TX 75237

March 1992

* Presented at the Third European Accelerator Conference, Berlin, Germany, March 24–28, 1992.
† Operated by the Universities Research Association, Inc., for the U.S. Department of Energy under Contract No. DE-AC35-89ER40486.
‡ The University of Texas, Arlington, Texas 76019.

# A Time Domain Control Algorithm for Global RF Feedback Loops

L.K. Mestha,† C.M. Kwan,‡ John Mangino,† and K.S. Yeung‡
† Superconducting Super Collider Laboratory,* Dallas, Texas 75237
‡ The University of Texas, Arlington, Texas 76019

*Abstract*

Phase-locking the Low Energy Booster to the Medium Energy Booster using "Trip-plan" approach is under development. With this scheme it is possible to phase lock the two machines at any time while ramping, even with wide frequency range in the low energy machine. This loop also has the potential to damp the phase oscillations and keep the beam in orbit by using the Low Energy Booster beam signal and a master clock as two moving references. A brief description of the bench test loop set up and the experimental results are shown in this paper to demonstrate the idea. We have investigated the ability of the loop to damp oscillations and also synchronize reference bunches. With the use of special algorithms it looks possible to operate the machine without the radial and beam phase loop. The implementation of such a scheme depends on the computational speed of the processors and the ability of fast Direct Digital Synthesizers to produce the guiding RF signal.

## 1 INTRODUCTION

Global beam control loops used for circular machines normally consists of (i) radial loop, (ii) damping loop (also called phase loop) and (iii) synchronization loop. In many accelerators the synchronization loop operates close to the end of the acceleration cycle. During the synchronization period the radial loop is disabled to maneuver the longitudinal phase of the reference bunch in the lower energy machine to match with the reference bucket of the higher energy machine. When the synchronization loop of the type discussed in Reference [1] is used, then it is possible to close this loop any time during the acceleration cycle. Since the new synchronization loop is conceptually a method to lock to a predetermined trajectory of a reference bunch in the lower energy machine, it seems possible to use this loop to even damp the coherent dipole oscillations in the beam and also contain the beam radius within the prescribed limits. We show in this paper how it can be achieved with a limited hardware and with an increased sophistication in the software. Only theoretical studies are presented on the Low Energy Booster (LEB). The experimental results demonstrating the "proof of principle" of the synchronization hardware is shown. With improved computing power, the hardware presented in this paper can be implemented. Since the hardware uses a Digital Signal Processor, the control algorithm can be implemented with assembly code in real time. If this idea works on the real accelerator, then the advantages are indeed quite attractive for normal operation. There will be no need to build a radial and phase loop strictly for normal machine runs, but it may be required during machine development studies. In particular, the reliability of the beam control electronics will improve a great deal due to reduced hardware and hence reduce failures associated with it.

*Operated by the Universities Research Association, Inc., for the U.S. Department of Energy under Contract No. DE-AC35-89ER40486.

## 2 SYNCHRONIZATION LOOP "PROOF OF PRINCIPLE"

In Figure 1, a loop diagram is sketched which was used to demonstrate the "proof of principle" of the programmed synchronization loop. It uses a Direct Digital Synthesizer (DDS) as the frequency source and is coupled to a divider that divides the DDS frequency by 108. The output of the divider is coupled to a stop input of a time-to-digital converter (TDC). A fixed frequency, such as the MEB (Medium Energy Booster) DDS provides an output to a divider that divides the MEB synthesizer frequency by 792. The dividers were chosen to represent the revolution frequencies for the rf signals appearing at the input end of the TDC. The TDC measures the time interval between every start pulse and the first stop pulse. The output of the TDC is a parameter having units of "time" which is read into a Digital Signal Processor (DSP). This time measurement is then multiplied with a velocity profile of the bunch, which was prestored in the DSP memory and recalled to define the velocity of the bunches at each measurement point. The multiplier output is subtracted from the pre-calculated values known as the trip-plan data [1]. The output of the multiplier is processed in the controller which converts the phase error to frequency shift in a linear or non-linear relationship in a manner to reduce the phase error. The frequency shift is applied to the DDS which is already sweeping the frequency. In other words, at the end of the trip-plan, the actual phase and the ideal phase are identical, thereby assuring synchronism and alignment. In Figure 2 we show the phase error data for the complete the acceleration cycle. The loop was closed after 1400 MEB turns with each MEB turn corresponding to 13.249 $\mu$sec. Convergence of the phase error from the time the loop was closed proves that the loop was working. The rf wave with an offset of 169 meters from the trip-plan at

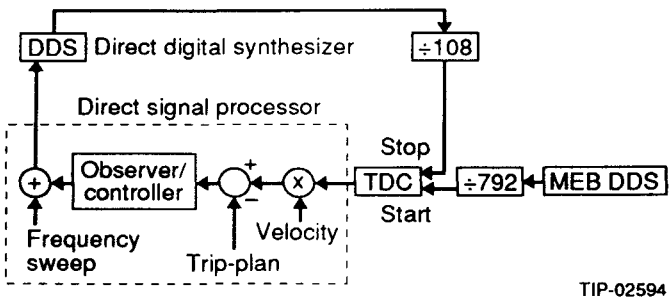


Figure 1: Synchronization loop diagram.

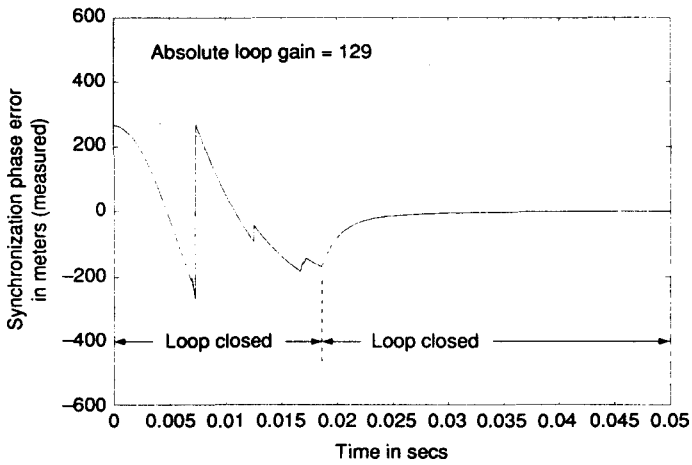


Figure 2: Measured synchronization phase error from the test bench of Figure 1.

the time of closing the loop is decreased to zero, hence the coincidence with the trip-plan data. Now by readjusting the trip-plan data appropriately and then locking would give the required synchronism.

## 3 BASIC IDEA OF A SINGLE GLOBAL LOOP

The idea that will be discussed in this paper assumes that a time-varying control model is known for the LEB. In Reference [1] a state space model was derived for low-intensity operation by ignoring the beam loading effects. The linear state equation is shown below by assuming $x_1$ as the synchronization phase error, $x_2$ as the radial orbit deviation from the central orbit, $x_3$ the dipole beam phase oscillations, and $u$ as the frequency shift generated by the feedback loop. Since we will be using only the synchronization loop, the general control model shown in Reference [1] can be simplified to the following matrix form:

$$\begin{bmatrix} \dot{x}_1 \\ \dot{x}_2 \\ \dot{x}_3 \end{bmatrix} = \begin{bmatrix} a_{11} & a_{12} & 0 \\ 0 & a_{22} & a_{23} \\ 0 & a_{32} & 0 \end{bmatrix} \begin{bmatrix} x_1 \\ x_2 \\ x_3 \end{bmatrix} + \begin{bmatrix} 0 & 0 & 0 \\ 0 & 0 & 0 \\ 0 & 0 & b_{31} \end{bmatrix} \begin{bmatrix} 0 \\ 0 \\ u \end{bmatrix} \quad (1)$$

$$\Rightarrow \underline{\dot{x}} = \underline{A}\,\underline{x} + \underline{B}\,\underline{u}. \quad (2)$$

The coefficients of the system matrix, $\underline{A}$, and the input matrix, $\underline{B}$, are in terms of machine parameters and are listed in Reference [1]. From the control model it is clear that by measuring the states a suitable control, $u$ can be generated so that the loop remains stable. On the other hand, by measuring $x_1$ alone and then estimating the remaining states from the control model with a real time estimation algorithm, the control $u$ can be obtained. Such an algorithm will be hard to implement in analog hardware for fast cycling machines due to the time-varying nature of the system matrix. Before discussing the design of the state estimators we show the expected performance of the loop without the radial and beam phase loops and with the measurement of $x_1$ with a proportional feedback alone. We then compare the performance with the introduction of the state estimating algorithm.

## 4 SYNCHRONIZATION LOOP WITH PROPORTIONAL FEEDBACK

In this case, the synchronization phase error $x_1$ is multiplied by the gain $k_1$ in the controller of Figure 1. A suitable frequency shift, $u$, is generated without knowing the phase error, $x_3$, or the radial position, $x_2$. The loop is closed and the expected performance is shown in Figure 3 for the LEB in the presence of field errors. Clearly, the synchronism is not very good (Figure 3(a)) and the phase oscillations are way too high (Figure 3(c)).

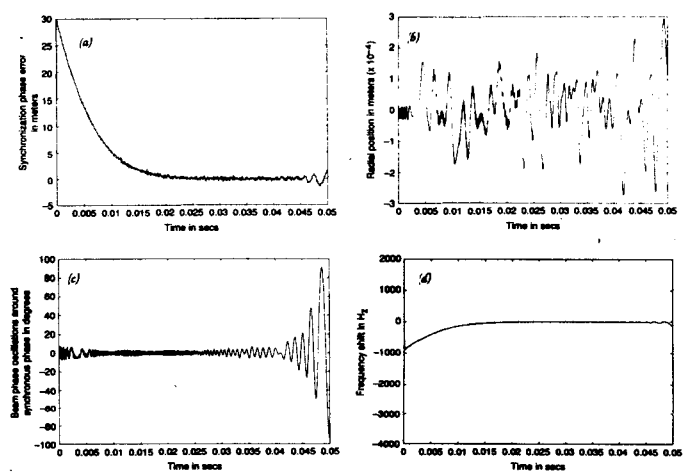

Figure 3: Simulation results with simple proportional feedback.

## 5 SYNCHRONIZATION LOOP WITH STATE FEEDBACK USING STATE ESTIMATOR APPROACH

### 5.1 *State Estimator Algorithm*

There are standard techniques available in the automatic control engineering literature to estimate the states from

the state space model. The state estimator is known as the observer. Since our control model for the LEB is time-varying and the measurement of the state, $x_1$, would contain errors, a kalman filter would be a more suitable observer. However, for simplicity, we use a standard closed loop Luenberger observer. To design the observer let us first represent the control model of the system Eq. 1 with an additional output equation as follows:

$$\begin{aligned} \dot{\underline{x}} &= \underline{A}\,\underline{x} + \underline{B}\,\underline{u} \\ y &= \underline{C}^T\,\underline{x} \end{aligned} \tag{3}$$

with

$$\underline{C}^T = [1\,0\,0] \qquad \text{and} \qquad \underline{x}^T = [x_1\, x_2\, x_3].$$

Let $\hat{x}_1$, $\hat{x}_2$ and $\hat{x}_3$ be the estimated state variables. Since $y = x_1$ is the measured output and $\hat{y} = \hat{x}_1$ the estimated output we can write the following estimator of the form

$$\begin{aligned} \dot{\hat{x}}_1 &= a_{11}\hat{x}_1 + a_{12}\hat{x}_2 + l_1(y - \hat{y}) \\ \dot{\hat{x}}_2 &= a_{22}\hat{x}_2 + a_{23}\hat{x}_3 + l_2(y - \hat{y}) \\ \dot{\hat{x}}_3 &= a_{32}\hat{x}_2 + b_{31}u + l_3(y - \hat{y}) \end{aligned} \tag{4(a)}$$

$$\dot{\underline{\hat{x}}} = \underline{A}\,\underline{\hat{x}} + \underline{B}\,\underline{u} + \underline{l}\,(y - \underline{C}^T\underline{\hat{x}}) \tag{4(b)}$$

where

$$\underline{l}^T = [l_1\, l_2\, l_3]$$

where $l_1$, $l_2$ and $l_3$ are the observer feedback gains. The error between the real states and the estimated states is given by

$$\begin{aligned} \dot{\underline{e}} &= \dot{\underline{x}} - \dot{\underline{\hat{x}}} = \underline{A}(\underline{x} - \underline{\hat{x}}) - \underline{l}\,\underline{C}^T(\underline{x} - \hat{x}) \\ \dot{\underline{e}} &= (\underline{A} - \underline{l}\,\underline{C}^T)\,\underline{e} \end{aligned} \tag{5}$$

and

$$\underline{e}(0) = \underline{x}(0) - \underline{\hat{x}}(0).$$

For a stable closed loop observer the characteristic equation of the error state vector $(s\underline{I} - \underline{A} + \underline{l}\,\underline{C}^T)$ must have eigenvalues on the left half of the $s$-plane, or must satisfy RH stability criteria for given values of observer feedback gains. The natural frequency of oscillations on the estimated state vectors are the eigenvalues of $\underline{A} - \underline{l}\,\underline{C}^T$ and must be selected to keep out of the synchrotron frequency region, by suitably choosing $l_1$, $l_2$ and $l_3$.

Clearly, Eq. 4(b) is the observer algorithm in mathematical form.

### 5.2 Controller Algorithm

Once the states are known, control section is now open to a simple state feedback or to even a more complex algorithm with additional dynamics. The state feedback design techniques can be used to fix the gains in three loops. The control law is now equal to

$$u = -(k_1\hat{x}_1 + k_2\hat{x}_2 + k_3\hat{x}_3). \tag{6}$$

The estimated states are used in the controller algorithm.

The simulation studies with observer and state feedback controller are shown in Figure 4. Clearly, comparison between Figure 3 and Figure 4 show that the phase oscillations are damped considerably and also the synchronization to the trip-plan has improved. Careful selection of observer gains, $l_1$, $l_2$ and $l_3$ is important for proper damping of the phase oscillations. In the LEB case we selected $l_1 = 10^4$, $l_2 = -0.2877$ and $l_3 = -6805$ so that the observer eigenvalues turned out to be negative. Furthermore, the controller gains were chosen as follows: $k_1 = 30$, $k_2 = 5000$ and $k_3 = 2000$. The integration steps have to be selected as small as possible while estimating the radial position and the phase oscillations.

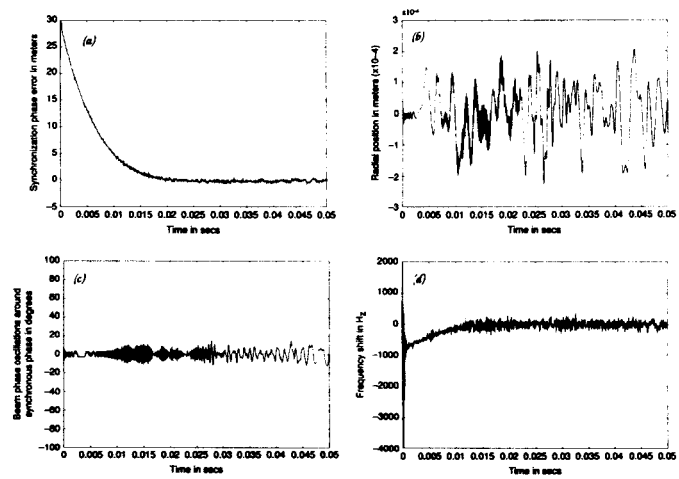


Figure 4: Simulation studies with observer/controller algorithm.

## 6 CONCLUSION

Theoretical results are presented to demonstrate the feasibility of running the Low Energy Booster using a new synchronization loop with the trip-plan approach. The phase loop and radial loop behavior is estimated from the synchronization phase error and then a suitable frequency shift is generated to control dipole oscillations, synchronization phase and the radial position. The estimation of dipole oscillations and the radial positions are done using a simple Luenberger observer algorithm. Since the LEB is a time-varying machine, a Kalman filter in place of a Luenberger observer would be a good choice. The implementation of the control algorithm needs special hardware such as the Digital Signal Processors and the Direct Digital Synthesizers.

## 7 REFERENCES

[1] L.K. Mestha, et al., "A General Control Model for Designing Beam Control Feedback Loops," published in this conference.