SSCL-Preprint-71

SSCL-Preprint-71

Superconducting Super Collider Laboratory

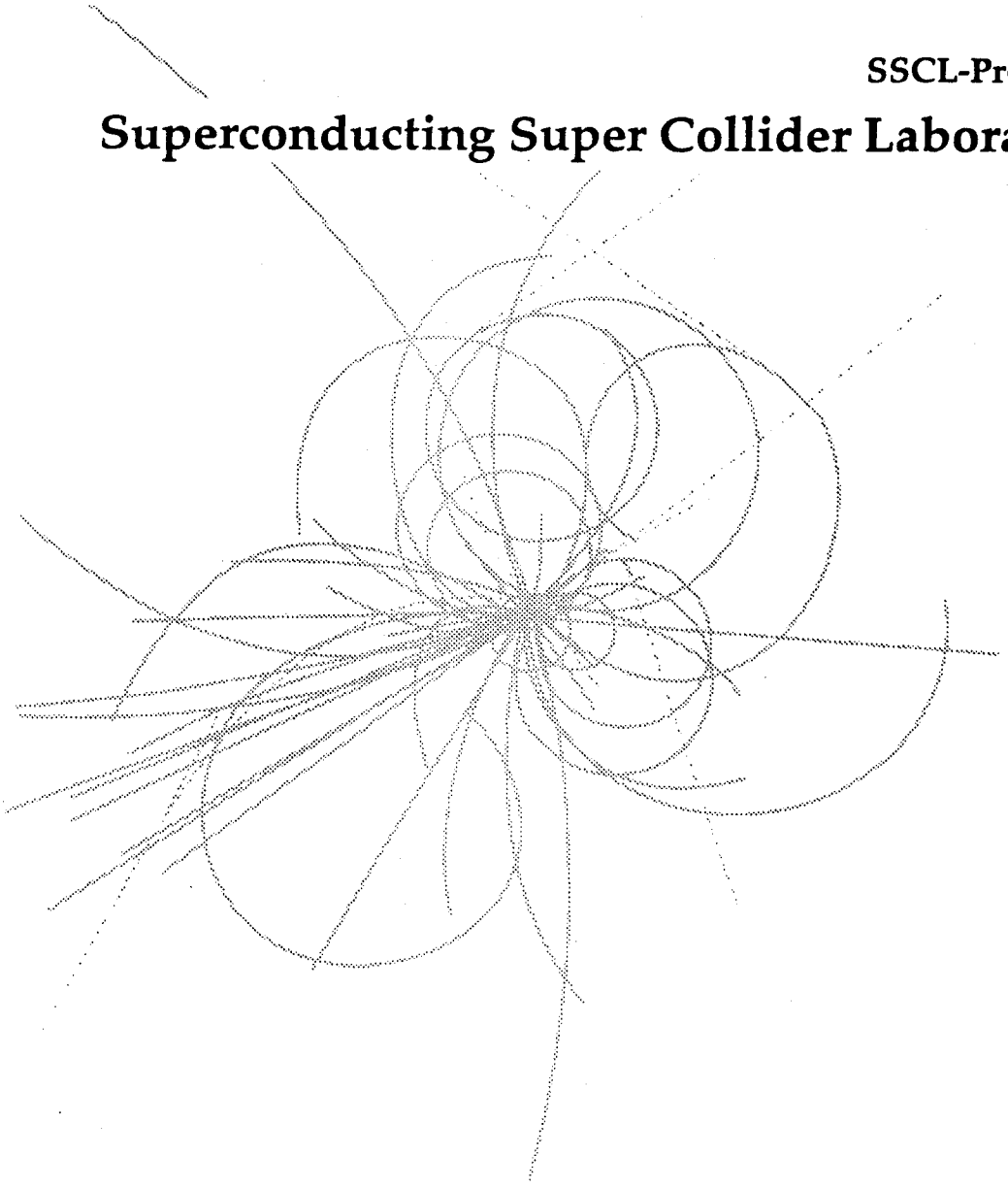

SDC Detector Foundation Requirements

J. L. Western and M. W. Butalla

March 1992

To be published in *Supercollider 4*

SSCL-Preprint-71

SDC Detector Foundation Requirements*

J. L. Western and M. W. Butalla

Superconducting Super Collider Laboratory†
2550 Beckleymeade Avenue
Dallas, Texas 75237

March 1992

*Presented at the International Industrial Symposium on the Super Collider, New Orleans, March 4–6, 1992.

†Operated by the Universities Research Association, Inc., for the U.S. Department of Energy under Contract No. DE-AC35-89ER40486.

SDC DETECTOR FOUNDATION REQUIREMENTS

Jeffrey L. Western and Martin W. Butalla

Superconducting Super Collider Laboratory*
2550 Beckleymeade Avenue
Dallas, TX 75237

ABSTRACT

The Solenoidal Detector Collaboration (SDC) Detector weighs approximately 32,000 metric tons, and its ability to perform to design specifications is directly related to its internal alignment. The limits of the misalignment tolerance envelope in combination with the detector weight impose a set of tolerance limits of performance directly upon the foundation structure. The foundation must accommodate different detector loading conditions during installation, operation, maintenance, and future enhancements. The foundation must also respond to the loading conditions within a restrictive set of displacement limitations in order to maintain the detector's critical alignment, thereby guaranteeing its operational integrity. This paper will present the results of this study, which has been issued to the Architect Engineer/ Construction Manager as user requirements of design. The total structural system performance of the combination of both the detector and its foundation will be discussed.

INTRODUCTION

The SDC detector's ability to perform to design specifications is directly related, among other factors, to its internal alignment. The limits of the misalignment tolerance envelope impose a set of tolerable limits of foundation performance, outside of which the detector becomes inoperable.[1] The purpose of this report is to identify the user's requirements of the tolerable limits of foundation performance that must be imposed upon the detector's foundation and to present a modest argument in support of the requirements.

SCOPE

The scope of this report includes only the aspect of the detector's limited ability to carry its own weight by means of its support system under all imposed loading conditions. The detector's ability to function at all is directly related to the structural integrity of its support system, which in turn is dependent upon the performance of the foundation under the support system.[2] The user's requirements for this report constitute the foundation performance impositions that will guarantee the structural integrity of the detector's support system.

* Operated by the Universities Research Association, Inc., for the U.S. Department of Energy under Contract No. DE-AC35-89ER4086.

support system.[2] The user's requirements for this report constitute the foundation performance impositions that will guarantee the structural integrity of the detector's support system.

DETECTOR DESCRIPTION

For purposes of this report, the SDC detector consists of a barrel toroid outer shell, a moveable calorimeter inner core and moveable end toroid (forward toroid) that moves concentrically with respect to the barrel toroid, and the barrel toroid structural support and alignment system that rests upon the concrete foundation. The approximate total weight of the detector components is 32,000 metric tons.

The Barrel Toroid

The barrel is a hollow toroid magnet containing and consisting of a series of transverse metallic plates bolted or welded together.[3] The high strength steel bolts or tie plates are positioned longitudinally with respect to the axis center line of the detector as shown in Figure 1. The plates are held together in compression by the post-tensioned bolts or welded plates. The maximum bolt tension or plate stress under barrel toroid bending contributes to the calculation of the deflection / deformation tolerance envelope of the detector.

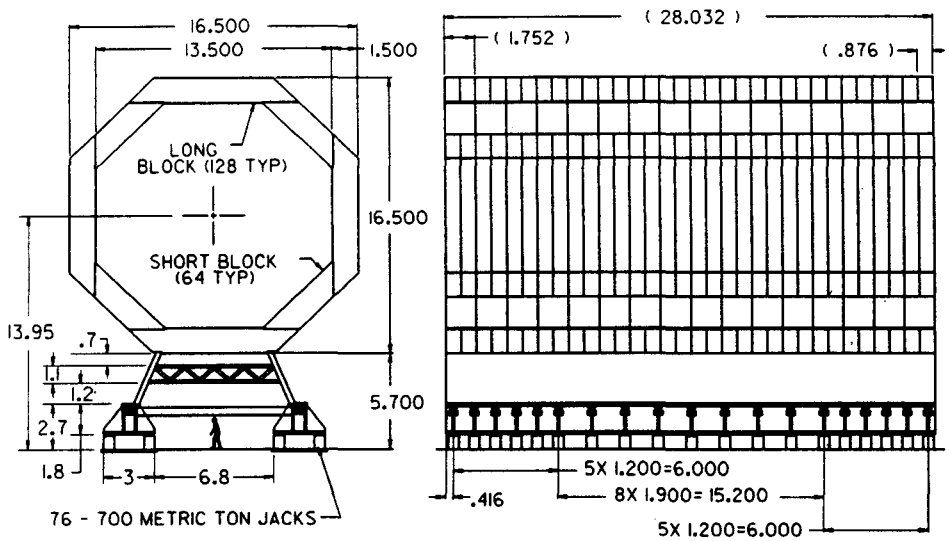

Figure 1.

Structural Support and Alignment

The support system for transferring the weight of the detector to the concrete foundation consists of a transverse space frame connecting the angled vertical support legs shown in Figure 1 and 2. The support legs bear upon two built-up girders that are 28.032 meters long each running the length of the barrel. Refer to Figures 1 in which are depicted a series of 38 transverse plates bolted to the built-up girders for absorption of the transverse tension load component imposed upon the girders by the support legs. Also shown in the referenced Figures are the 76 hydraulic jacks aligned under the girders for transferring the girder reactions to the embedded plates in the concrete foundation floor. The jacks provide the capability of returning the detector from any tolerable deflected condition to its undeflected configuration. The range of jack adjustment contributes to the calculation of the deflection/deformation tolerance envelope of the detector.

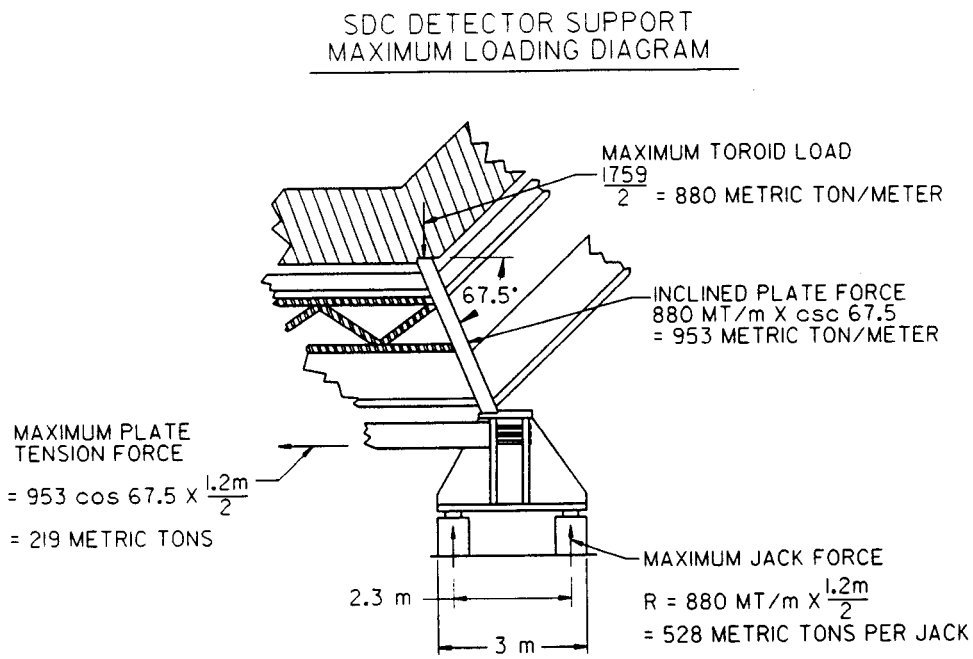

Figure 2.

The Forward Toroid

The forward or end toroid is the end of the magnet, which fits directly into the end of the barrel toroid. Refer to Figure 3 entitled Forward Toroid "SDC - DETECTOR DEFORMATION LIMITS". It consists of metallic plates bolted together in compression by post-tensioned bolts. The approximate weight of the forward toroid with attachments is 3,600 metric tons.

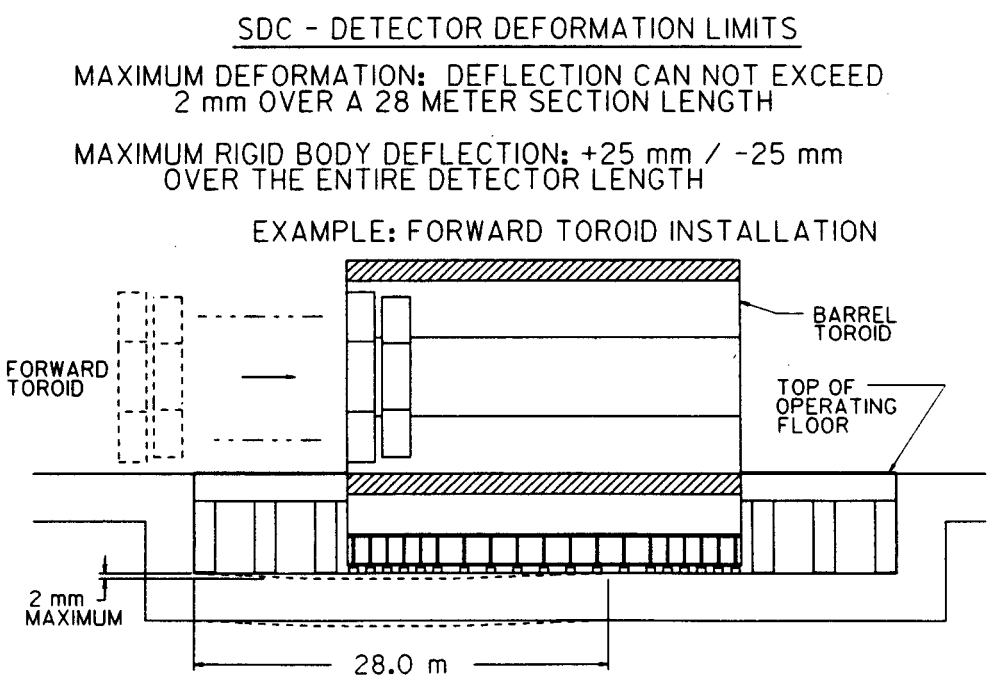

Figure 3.

Refer to Figure 4 entitled Calorimeter "SDC - DETECTOR DEFORMATION LIMITS". The approximate weight of the calorimeter with attachments is 6,000 metric tons. The calorimeter is shown to be installed in one unit, but consideration is being given for splitting the calorimeter into halves of 3,000 metric ton each.

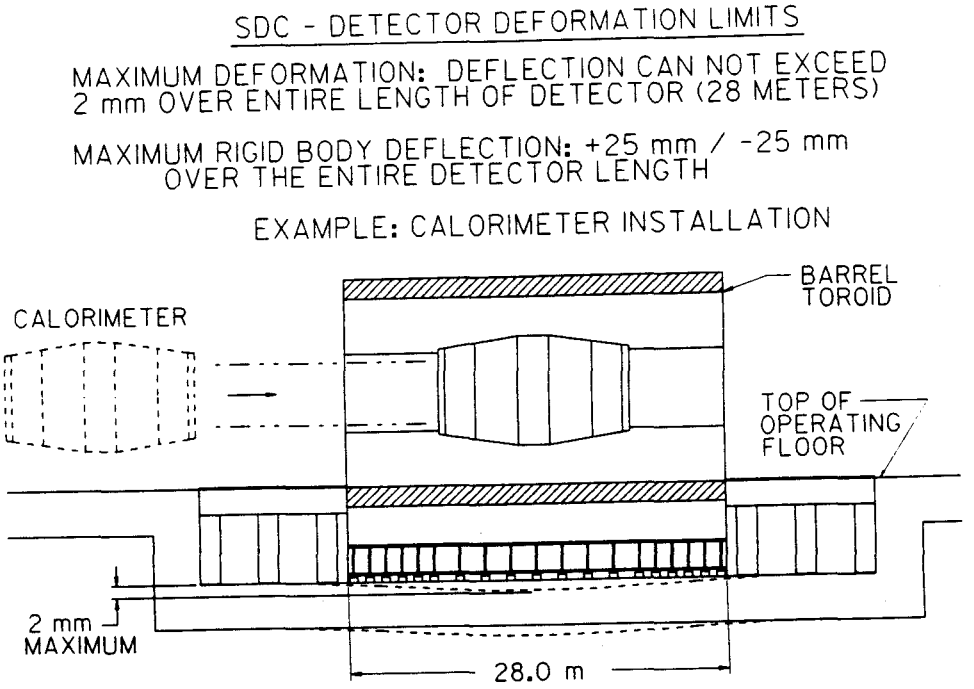

Figure 4.

FOUNDATION LOADING CONDITIONS AS REQUIREMENTS

An indirect part of the user's requirements for the operation of the detector is the concrete foundation's ability to withstand the imposed loads of the detector throughout all phases of its life cycle, while restricting load deformations to fall within the tolerable limits of the detector's support and alignment system. Basic loading combinations that will test the foundation performance occur during the installation, operation, and maintenance phases. A future condition may also result in a unique combination that must be considered. Refer to Figure 5A and 5B entitled "SDC Detector Floor Loads" for the identification of load cases A through F, combinations of which constitute the following loading conditions:[4]

Operating Condition

The operating condition, represented by load case F, results in loads from the barrel toroid in place with the calorimeter in operating location. The operation phase constitutes the steady state condition and will be the governing loading combination for approximately 90% of the life of the detector.

Installation Condition

The installation condition, represented by the worst combination of load cases A through E, results from the assembly and construction of the barrel toroid and the calorimeter upon the support system. It also includes the loadings due to the testing of the support and alignment system and the initial testing of the calorimeter mobility.

Maintenance Condition

During maintenance, the forward toroid and calorimeter may be rolled out from within the barrel, the barrel and calorimeter may undergo some repair, and the support and alignment system may undergo repair, replacement, or realignment of the barrel. The maintenance condition is represented by either (1) the worst combination of load cases A through E or (2) the leveling of the detector (load case F) combined with a failure of a number of jacks. The maximum jack operating load is estimated to be 528 metric tons per jack. (Jack capacity is approximately 700 metric tons each). A single jack failure would increase the adjacent jacks to an approximate load of 634 metric tons (20% increase to surrounding jacks) each for the time duration of the repair. Refer to Figure 2.

Future Condition

The future condition is unknown at the time of the detector design but would be satisfied by applying a load factor of 105% to any or all of load cases A through D and combined as above.

FOUNDATION PERFORMANCE LIMITATION AS REQUIREMENTS

A direct part of the user's requirements with respect to the concrete foundation's ability to uphold the integrity of the detector is the tolerable limits of foundation deflection/deformation, outside of which the detector would cease functioning and incur damage. The loading conditions of the detector upon the concrete foundation will produce stresses within the concrete floor slab and the slab's support structure. The internal stresses in the concrete will cause deformation of the concrete geometry. The concrete sub-structure will deliver its reactive forces to the soil/rock media causing stress-producing deformation in the soil/rock media. The detector experiences the combination of soil, rock, and concrete deformations in two basic types of stress-induced movements. The barrel toroid, along with the forward toroid, the calorimeter and support system, moves as one rigid body in space experiencing global translations and global rotations through all six degrees of freedom relative to any point in space. The second type of movement experienced by the detector is a relative rotation/translation of one node within the detector's spatial coordinate system with respect to other internal nodes. This results in flexure, shear, and torsional deformation of the barrel toroid, inducing significant internal stresses and strains.

Rigid Body Motion of the Barrel Toroid

The rigid body translations and rotations in space experienced by the barrel toroid induce negligible internal stresses or strains in the toroid. The tolerance limits of the rigid body movements permitted by the concrete foundation range from ± 25 mm which lie within the support alignment design. The rigid body movements cause little global alignment difficulties and negligible internal stress-strain factors for the detector.

Flexure, Shear, and Torsion of the Barrel Toroid

Flexure, shear, and torsional deformation of the proposed barrel toroid induce significant internal stresses and strains. The transverse plates that are bolted or welded longitudinally can carry bending, shear and torsional stresses in the plane of the plates provided flexure of the barrel is small. The deflection limitation and flexure strength of the barrel is governed by the size and amount of bolts or welds, which are limited by the magnetic and construction requirements of the barrel toroid.

Refer to Figure 3 where a flexure is shown to be induced in the toroid by slab deflection of a moving forward toroid load. The limit of toroid deflection is shown to be 2 mm over a 28 meter span. Refer to Figure 4 where a beam flexure is shown to be induced in the toroid by slab deflection of a moving calorimeter load. The limit of toroid beam deflection is shown to be 2 mm over the full length of the toroid (28.032 meters).

The flexibility ratio between the toroid and the concrete floor slab is worth consideration. The toroid will encounter induced stresses according to the inverse proportion of the flexibility ratio. If the floor slab were to be designed as a flexible system, the toroid will be forced to carry the majority of the induced load. Conversely, the stiffer the floor slab, the less the induced load will be in the toroid. Therefore, the flexibility of the toroid is recommended to be considered in the design of the concrete floor slab foundation system.

CONCLUSION

The SDC detector is very sensitive to foundation floor performance. The relative stiffness ratio between the detector and the concrete sub-structure dictates that the detector will experience the majority of its own dead load stresses. A detector structural steel failure will occur long before the concrete sub-structure experiences any significant internal stresses. Therefore, the design of the concrete sub-structure must be deformation-controlled rather than stress-controlled. The foundation deformation governs the adequacy of the design and, as such, controls the design requirements given to the Architect Engineer / Construction Manager for detailed design of the foundation structure.

ACKNOWLEDGEMENTS

The authors would like to acknowledge the contributions of the following people: R. Gates, J. Petry and J. Tseng.

REFERENCES

1. J. Bensinger, "SDC Barrel Steel Definition and Specification Proposal," Version 2.6, January 14, 1992.

2. K.K. Leung and J. L. Western, "An Engineering Design Study of Detector Deformation Limits in the SDC - Detector," Paper III-E-3, IISSC, New Orleans, Louisiana, March 4-6, 1992.

3. J. Cherwinka, editor, "SDC Muon Barrel Toroid Conceptual Design Report Using Long and Short Bolted Blocks," SSCL/SDC Note: SDC-91-105, September 25, 1991.

4. J. Tseng and J. Petry, "SDC Detector Foundation Load Distribution Study," SSCL/SDC Report: SDT-000015, January 16, 1992.