SSCL-621

SSCL-621
April 1993
Distribution Category: 400

G. Stupakov
A. Chao

Collective Effects and Beam Decoherence

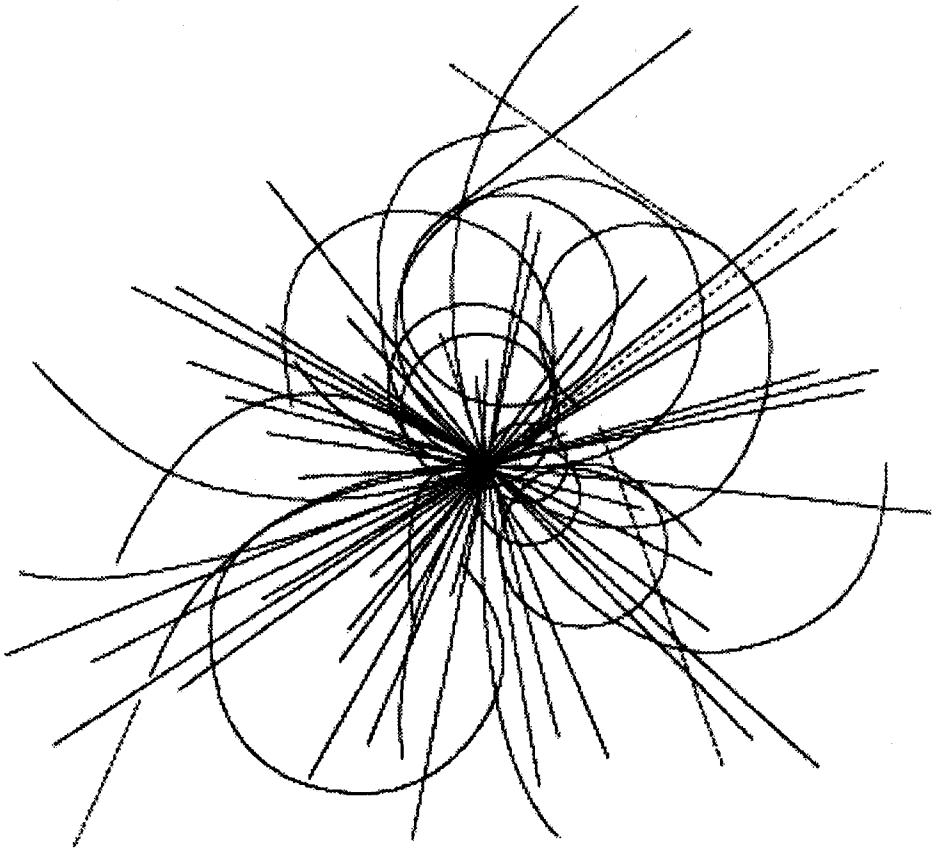

Superconducting Super Collider Laboratory

SSCL-621

Collective Effects and Beam Decoherence

G. Stupakov and A. Chao

Superconducting Super Collider Laboratory*
2550 Beckleymeade Ave.
Dallas, TX 75237

April 1993

*Operated by the Universities Research Association, Inc., for the U.S. Department of Energy under Contract No. DE-AC35-89ER40486.

Collective Effects and Beam Decoherence

G. V. Stupakov and A. W. Chao

Abstract

The effect of collective forces due to an impedance on the decoherence process in an accelerator is studied. A general formalism is developed that allows treatment of different types of impedances. We show that increase of the imaginary impedance causes a slowing down of the decoherence. For the real impedance, our theory demonstrates transition from Landau-damped oscillations to instability.

1.0 INTRODUCTION

When a charged particle beam interacts electromagnetically with its environment it creates a wakefield that acts back on the beam perturbing the particle motion. Typically, the wakefield is invoked for studies of the stability problem. Another physical process where the wake might play an important role is the decoherence of the beam after a kick.[1] Understanding of the decoherence process is needed in such applications as design of the feedback system and dampers for storage rings[2] because the decoherence eventually translates coherent betatron oscillations of the beam into the increment of the beam emittance.

Collective instability and decoherence are intimately related issues. The present paper describes our attempt to relate these issues. We consider one-dimensional transverse oscillations of a charged bunch in the presence of a collective force acting on the beam. The latter is formulated in a general operator form that covers as particular cases many different physical situations. An important feature of the collective force is that it depends on the averaged displacement of the beam. Starting with the equation of motion for a single particle, for a given initial distribution function, we derive an integral equation that governs the time evolution of the averaged offset of the beam. This equation is solved using Laplace transform, and with a proper scaling of the variables, the result takes the form of a definite integral depending on a single (complex) parameter. Numerical computation of the integral predicts that in many cases decoherence slows down with the increase of the wakefield. We also demonstrate that in the presence of wakefields the decoherence can be considered as a transient process leading to Landau damping of the betatron oscillations.

2.0 FORMULATION OF THE PROBLEM

We will consider transverse motion of the beam and will model the additional collective force exerting on the beam by adding a term to the right hand side of the single-particle equation of motion. In general, the magnitude of this force at a time t depends not only on the beam offset at this moment, but also on the history of the beam displacement at previous times. The betatron oscillation of a particle of the beam in this situation can be described by the following equation:

$$\frac{d^2\eta}{dt^2} + \omega^2\eta = \omega_0\hat{L}\bar{\eta}, \tag{1}$$

where $\eta = x/\sqrt{\beta}$ is the particle displacement in the transverse direction normalized by the square root of the beta function, ω is the betatron frequency of the given particle, $\bar{\eta} = \bar{x}/\sqrt{\beta}$ is the normalized displacement of the bunch averaged over the distribution function of the beam, and $\hat{L}$ is a linear operator acting on $\bar{\eta}$. The frequency ω_0 is introduced in Eq. (1) so that the operator $\hat{L}$ has the dimension of the frequency; here ω_0 can be understood as a mean betatron frequency of the beam oscillations. Taking into account that only precedent moments can contribute to the current value of the collective force, we can write down a general expression for this operator as

$$\hat{L}\bar{\eta} = \int_{-\infty}^{t} \Lambda(t-t')\bar{\eta}(t')dt', \tag{2}$$

where $\Lambda(t)$ is the kernel of the integral operator.

One can easily relate the operator $\hat{L}$ with the transverse wake function comparing, for example, the equation of motion in Reference 3 with our Eq. (1). This gives

$$\omega_0 \hat{L}\overline{\eta} = \frac{Ne^2}{m_0\gamma} \sum_{n=1}^{\infty} \overline{\eta}(t - nT) w(nT), \tag{3}$$

where N is the number of particles in the bunch, γ is the relativistic factor, T is the revolution period, and e and m_0 are the particle's charge and rest mass. The kernel of the operator $\hat{L}$ given by Eq. (3) contains delta functions, $\Lambda(t) \propto \sum_{n=1}^{\infty} w(t)\delta(t - nT)$.

Before proceeding further, note that in the simplest case, the operator $\hat{L}$ reduces to multiplication by a constant, $\hat{L}\overline{\eta} = c\overline{\eta}$. In this case, as is well known, Eq. (1) gives a coherent tune shift $\delta\omega_{coh}$ of the betatron frequency of the beam equal to $\delta\omega_{coh} = -c/2$, so that in terms of $\delta\omega_{coh}$, $\hat{L}\overline{\eta} = -2\delta\omega_{coh}\overline{\eta}$.

3.0 FORMAL SOLUTION

A formal solution of Eq. (1) is given by the following expression:

$$\eta(t) = \eta_0 \cos(\omega t) + \frac{\dot{\eta}_0}{\omega} \sin(\omega t) + \frac{\omega_0}{\omega} \int_0^t dt' \hat{L}\overline{\eta}(t') \sin(\omega t - \omega t'), \tag{4}$$

where η_0 and $\dot{\eta}_0$ are initial offset and velocity in the transverse direction of the particle. Let $\psi(\eta_0, \dot{\eta}_0, \omega)$ be a distribution function of the beam over initial values of η_0 and $\dot{\eta}_0$ and the frequency ω. We will assume that it factors out into the product of two functions, $\psi(\eta_0, \dot{\eta}_0, \omega) = f(\eta_0, \dot{\eta}_0)\varrho(\omega)$, normalized so that

$$\int_{-\infty}^{\infty} d\dot{\eta}_0 \int_{-\infty}^{\infty} d\eta_0 \, f(\eta_0, \dot{\eta}_0) = 1,$$

$$\int_0^{\infty} \varrho(\omega) d\omega = 1.$$

The function f gives the probability for a particle to have initially given offset and deflection angle, and ϱ describes the distribution of the betatron frequencies in the beam. These two distribution functions are independent of each other if the tune does not depend on the amplitude of the betatron oscillations, which is true in the case when the tune spread is caused by the energy spread of the beam together with a nonvanishing chromaticity of the ring. For the sake of simplicity assume also that $f(\eta_0, \dot{\eta}_0)$ is such that $\overline{\eta}_0 = 0$ (but $\overline{\dot{\eta}} \neq 0$), which means that we deal with a kicked beam having no initial offset.

The problem consists in solving for the time evolution of the averaged offset of the beam. In accordance with a real situation, we will take into account that particles have a small frequency spread $\Delta\omega$ around ω_0, $\Delta\omega \ll \omega_0$. Averaging Eq. (4),

$$\overline{\eta} = \int_{-\infty}^{\infty} d\omega \varrho(\omega) \int_{-\infty}^{\infty} d\dot{\eta}_0 \int_{-\infty}^{\infty} d\eta_0 \, f(\eta_0, \dot{\eta}_0)\eta,$$

one finds the following equation for $\bar{\eta}(t)$:

$$\bar{\eta}(t) = \frac{\bar{\eta}_0}{\omega_0}\int_0^\infty \frac{\omega_0}{\omega}\sin(\omega t)\varrho(\omega)d\omega + \int_0^t dt'\hat{L}\bar{\eta}(t')\int_0^\infty \frac{\omega_0}{\omega}\sin(\omega t - \omega t')\varrho(\omega)d\omega. \tag{5}$$

At this stage it is convenient to define a *decoherence function*, $K(t)$:

$$K(t) \equiv \int_0^\infty \frac{\omega_0}{\omega}\sin(\omega t)\varrho(\omega)d\omega, \tag{6}$$

so that Eq. (5) takes the form

$$\bar{\eta}(t) = \varepsilon K(t) + \int_0^t dt'\hat{L}\bar{\eta}(t')K(t - t'), \tag{7}$$

where $\varepsilon = \bar{\eta}_0/\omega_0$. As is seen from Eq. (7), the decoherence function gives the dependence of $\bar{\eta}(t)$ in the limit when there is no wake force acting on the beam, $\hat{L} \equiv 0$. In other words, $K(t)$ represents the decoherence process in the case without the collective force.

To solve the integral Eq. (7), we will use Laplace transform and introduce the functions $\sigma(s)$, $k(s)$, and $l(s)$ of the complex variable s as the Laplace transforms of $\bar{\eta}(t)$, $K(t)$, and $\Lambda(t)$, respectively:

$$\sigma(s) = \int_0^\infty \bar{\eta}(t)e^{-st}dt,$$

$$k(s) = \int_0^\infty K(t)e^{-st}dt,$$

$$l(s) = \int_0^\infty \Lambda(t)e^{-st}dt.$$

Applying Laplace transform to Eq. (7) one finds

$$\sigma(s) = \frac{\varepsilon k(s)}{1 - k(s)l(s)}, \tag{8}$$

and performing the inverse transform yields

$$\bar{\eta}(t) = \frac{\varepsilon}{2\pi i}\int_{\sigma - i\infty}^{\sigma + i\infty} \frac{k(s)}{1 - k(s)l(s)}e^{st}ds. \tag{9}$$

The last equation, in principle, gives a formal solution to the problem. In what follows we elaborate Eq. (9) for a particular distribution function $\varrho(\omega)$.

It is worth noting here that the function $l(s)$ is closely related to the impedance associated with the wakefield under consideration. More precisely, using Eq. (3) and a definition of the transverse impedance $Z(\omega)$,

$$Z(\omega) = -icT \int_{-\infty}^{\infty} w(t)e^{i\omega t}dt,$$

one can show that

$$l(s) = \frac{iNe^2}{m_0\gamma cT^2\omega_0} \sum_{n=-\infty}^{\infty} Z(n\Omega + is). \tag{10}$$

4.0 GAUSSIAN DISTRIBUTION FUNCTION

Assume a Gaussian distribution over the frequency,

$$\varrho(\omega) = \frac{1}{\sqrt{2\pi}\Delta\omega}\exp\left[-\frac{(\omega-\omega_0)^2}{2\Delta\omega^2}\right], \quad \Delta\omega \ll \omega_0, \tag{11}$$

where $\Delta\omega$ is the rms frequency spread. Such a distribution function corresponds to a Gaussian distribution over the energies in a ring with a linear chromaticity. Performing integration in Eq. (6), one easily finds the decoherence function

$$K(t) = e^{-(\Delta\omega t)^2/2}\sin(\omega_0 t), \tag{12}$$

which has the following Laplace transform,

$$k(s) = \frac{\pi^{1/2}}{2^{3/2}\Delta\omega}\varkappa\left(\frac{is}{\Delta\omega}\right), \tag{13}$$

where

$$\varkappa(\zeta) = w(\zeta + a) - w(\zeta - a) \tag{14}$$

and

$$w(\zeta) = -ie^{-\zeta^2/2} + \frac{2}{\sqrt{\pi}}e^{-\zeta^2/2}\int_0^{\zeta/\sqrt{2}} e^{-s^2}ds = -ie^{-\zeta^2/2}\mathrm{erfc}\left(-i\zeta/\sqrt{2}\right). \tag{15}$$

In Eq. (14) we introduced the parameter a,

$$a = \frac{\omega_0}{\Delta\omega}, \tag{16}$$

which according to our assumptions is much larger than one, $a \gg 1$. Note that the variable $\zeta = is/\Delta\omega$ in Eqs. (14) and (15) has a meaning of frequency measured in terms of the frequency spread in the beam.

Defining a new time variable,

$$\tau = \Delta\omega t,$$

and the function $\lambda(s)$,

$$\lambda(s) = \pi^{1/2} l(s)/2^{3/2}\Delta\omega,$$

we can express the result in the following form:

$$\varepsilon^{-1}\overline{\eta}(t) = \frac{1}{4\sqrt{2\pi}} \int_{-\infty+i\nu}^{\infty+i\nu} \frac{\varkappa(\zeta)}{1-\varkappa(\zeta)\lambda(\zeta)} e^{-i\zeta\tau} d\zeta, \tag{17}$$

where the integration is carried out along the horizontal line in the upper half-plane of the complex variable ζ ($\nu > 0$) above all possible singularities of the integrand.

Assume first that the integrand does not have singularities in the upper half-plane. In this case, we can shift the integration path toward the real axis (see Figure 1), casting the integral in Eq. (17) into a Fourier integral. The real part of the integrand is a symmetric function of ζ, while its imaginary part changes sign when $\zeta \to -\zeta$. This allows one to perform integration from zero to infinity taking the double real part of the result,

$$\varepsilon^{-1}\overline{\eta}(t) = \frac{1}{2\sqrt{2\pi}} \mathrm{Re} \int_{0}^{\infty} \frac{\varkappa(\zeta)}{1-\varkappa(\zeta)\lambda(\zeta)} e^{-i\zeta\tau} d\zeta. \tag{18}$$

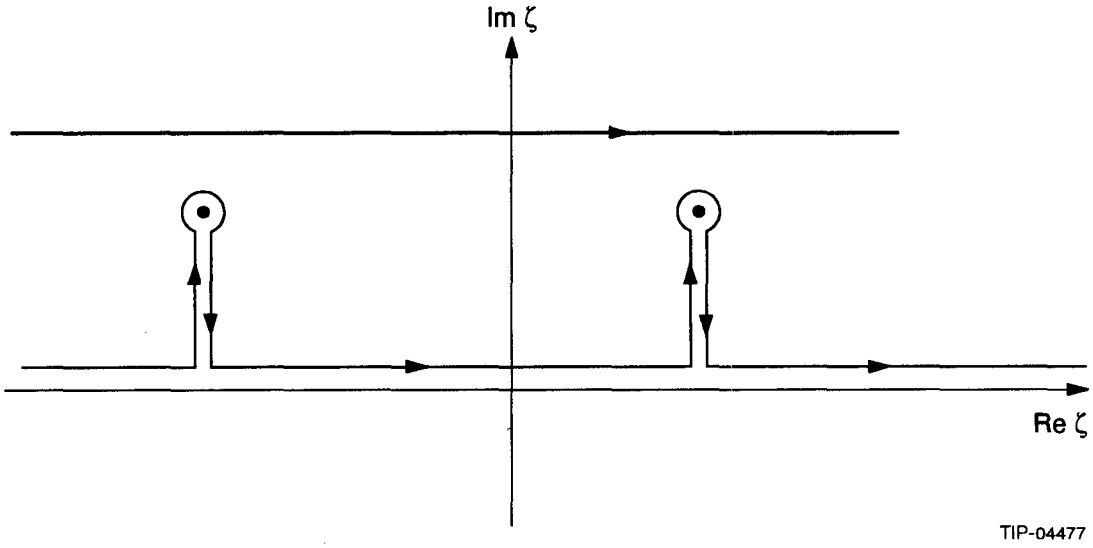

Figure 1. The Paths of Integration in the Complex Plane ζ. Initial integration path in the inverse Laplace transform is shown by the horizontal line in the upper half-plane. In a case when the integrand in Eq. (17) does not have poles in the upper half-plane, it can be simply shifted down toward the real axes. In the opposite case, the integration path has to encompass the poles as shown in the figure, giving rise to the contribution of the residues.

An important feature of the function $\varkappa(\zeta)$ is that it has a sharp peak with the maxima of real and imaginary parts located around $\zeta = a$, the width of this function being of the order of unity. In dimensional units, $\omega = \zeta\Delta\omega$, the maxima are located at the betatron frequency ω_0 with the width being of the order of the frequency spread $\Delta\omega$ in the beam. Let us assume that the width of the function $\lambda(\zeta)$ is much larger than one; this allows us to substitute $\lambda(\zeta)$ in Eq. (18) by its value λ_0 at the point a, $\lambda_0 = \lambda(a)$. Referring to Eq. (10) we note that our assumption means that the characteristic width of the impedance Z is much larger than the frequency spread in the beam $\Delta\omega$; naturally, in this limit only the value of impedance at the betatron frequency (and sideband harmonics) contribute to the problem.

Changing the integration variable in Eq. (18) to $\xi = \zeta - a$, one finds

$$\varepsilon^{-1}\overline{\eta}(t) = -\,\mathrm{Re}\frac{1}{2\sqrt{2\pi}}e^{-ia\tau}\int_{-\infty}^{\infty}\frac{w(\xi)}{1 + w(\xi)\lambda_0}e^{-i\xi\tau}d\xi, \tag{19}$$

where we have extended the integration from minus to plus infinity because $w(\xi)$ rapidly goes to zero for large values of ξ. We emphasize here that Eq. (19) gives a closed form for the time evolution of the averaged displacement $\overline{\eta}(t)$, which depends only on one (complex) parameter λ_0. With the function $w(\xi)$ given by Eq. (15), the integral (19) can be evaluated numerically.

We performed numerical integration and found the modulus of the complex function given by the right hand side of Eq. (19), which we call A. The results for different real values of λ_0 are displayed in Figure 2. Turning to the discussion of this plot, note first that real λ_0 corresponds to a purely imaginary impedance (see Eq. (10)) and can be related to the coherent frequency shift of the beam caused by the wake force. Indeed, for an operator $\hat{L}$ that reduces to a multiplication by a (real) constant c, one can find that $\lambda_0 = \pi^{1/2}c/2^{3/2}\Delta\omega$. Since $c = -\,2\delta\omega_{coh}$ (see Section 2.0), one finds $\delta\omega_{coh} = -\,(2/\pi)^{1/2}\lambda_0\Delta\omega$. The ratio $\delta\omega_{coh}/\Delta\omega$ is indicated in Figure 2 rather than λ_0 itself. As is seen from Figure 2, for $\delta\omega_{coh} = 0$ (no wakefield) we recover a Gaussian decay in agreement with Eq. (12). However, increasing the coherent frequency shift slows down the decoherence process.

As a simple analysis shows, the result of the integration in Eq. (19) does not depend on the sign of λ_0, so that the curves in Figure 2 are also valid for $\delta\omega_{coh} \rightarrow -\,\delta\omega_{coh}$.

In the limit $|\lambda_0| \gg 1$, the following asymptotic formula can be derived from Eq. (19):

$$\varepsilon^{-1}\overline{\eta}(t) = \sin\left(\tau\left[a - (2/\pi)^{1/2}\lambda_0\right]\right)\exp\left(-\,(2/\pi)^{1/2}\tau\lambda_0^2 e^{-\lambda_0^2/\pi}\right). \tag{20}$$

It tells us that instead of Gaussian decay according to Eq. (12) without a collective force, large coherent tune shift produces an exponential fall of $\overline{\eta}$. Such behavior is anticipated from the theory of Landau damping. The dimensional damping rate is given by the exponent in Eq. (20):

$$\gamma = \omega_0\sqrt{\frac{\pi}{2}}\left(\frac{\delta\omega_{coh}}{\Delta\omega}\right)^2 e^{-\frac{1}{2}\left(\frac{\delta\omega_{coh}}{\Delta\omega}\right)^2}. \tag{21}$$

In a more general case of complex λ_0, an initial kick does not necessarily decohere. The reason is that for an arbitrary impedance one can encounter an instability that, in a linear theory, exhibits itself as unlimited growth of an initial perturbation. To illustrate this point, we performed numerical integration for a set of purely imaginary λ_0, $\lambda_0 = il$, where l is real. This case corresponds to a real impedance Z. As calculations show, in this case one has to start from Eq. (17), because for $l > 1$ the integrand has two poles in the upper half-plane of the complex variable ζ. Having moved the integration path onto the real axis, we have to add the contribution from the residues of the poles (see Figure 1). The two poles give complex conjugate

contributions, so that one can double the real part of one of the poles. The presence of the poles in the upper half-plane implies instability, with the growth rate given by the real part of the pole coordinates. The results of numerical calculations for this case are shown in Figure 3. Note that since l is a measure of impedance in terms of the frequency spread of the beam $\Delta\omega$, the absence of instability at $l < 1$ means that the instability disappears when the beam has a sufficiently large tune spread. This is a manifestation of the instability suppression by the effect of Landau damping.[4]

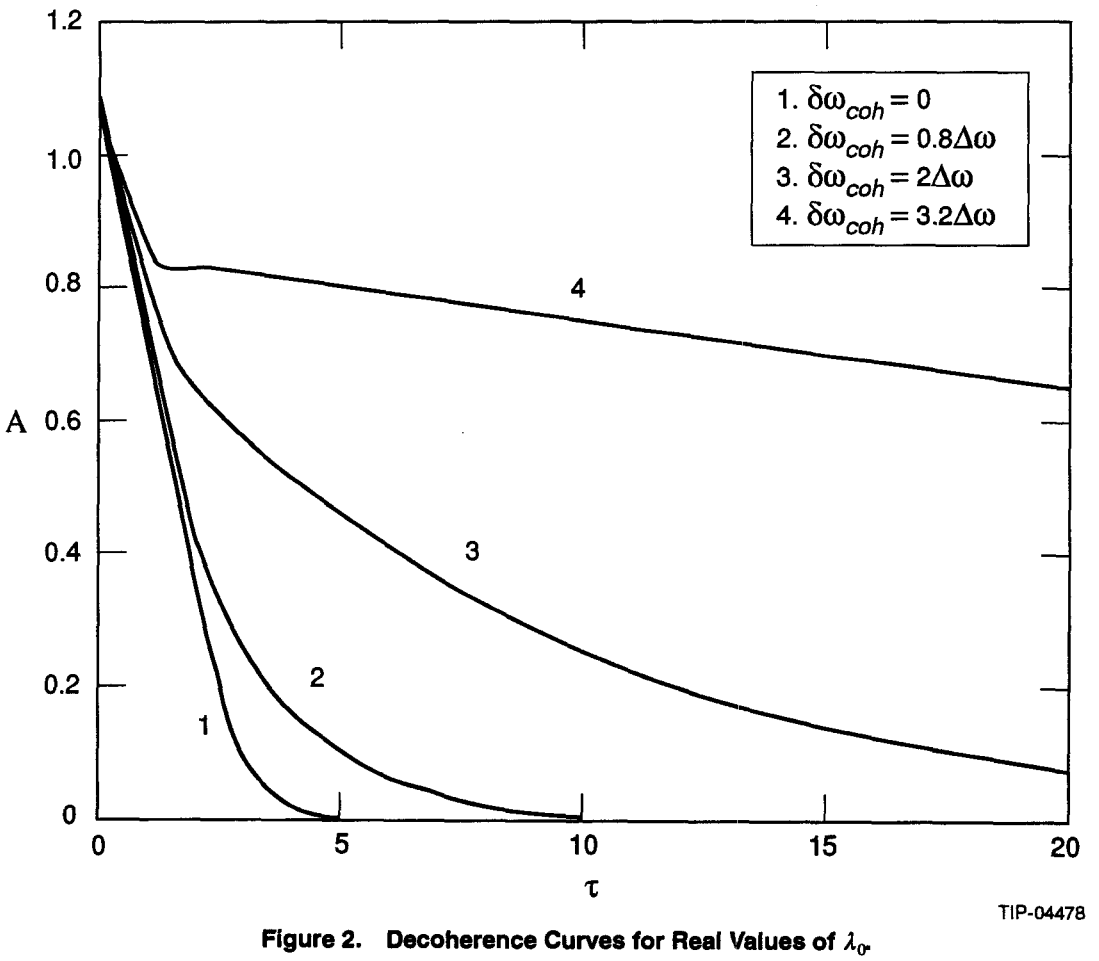

Figure 2. Decoherence Curves for Real Values of λ_0.

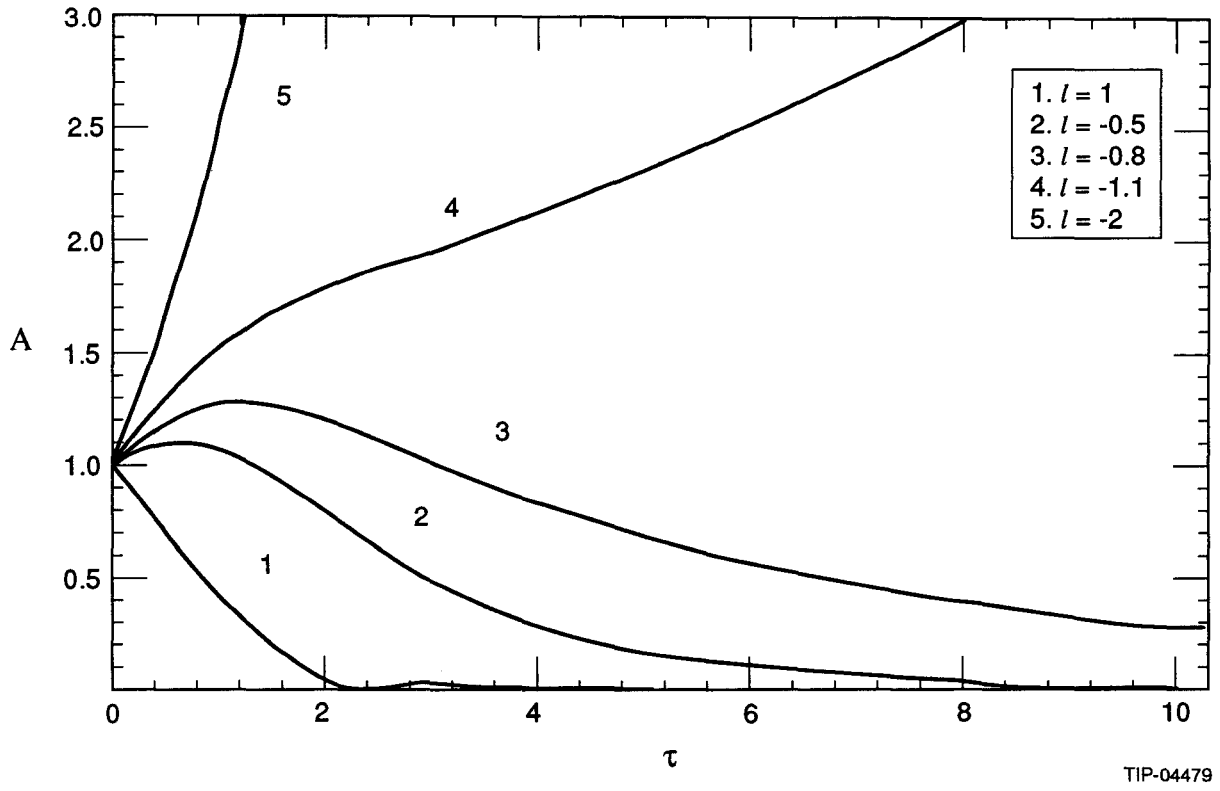

Figure 3. Decoherence Curves for Imaginary Values of λ_0.

5.0 SUMMARY

We have developed a simple theory of decoherence in the presence of a wakefield acting on a bunch of charged particles. Having used an assumption of a broad-band impedance, we found that the decoherence is determined by the value of the impedance at the betatron frequency (and its sidebands). For purely imaginary Z, (which gives rise to the coherent frequency shift of the beam), the decoherence slows down with the increase of $\delta\omega_{coh}$. This feature seems to be in qualitative agreement with simulation and experimental observation of the space-charge effects.

For real Z, the theory recovers both stable and unstable situations. In the former case, the initial kick decoheres rapidly. In the latter case, we observe a growth of the beam oscillation amplitude over time after an initial kick.

REFERENCES

1. R. E. Meller, A. W. Chao, J. M. Peterson, S. G. Peggs, and M. Furman, *Decoherence of Kicked Beams*, SSC-N-360, 1987.
2. V. Lebedev, V. Parkomchuk, V. Shiltsev, and G. Stupakov, *Emittance Growth Due to Noise and its Suppression with the Feedback System in Large Hadron Colliders*, SSCL-Preprint-188, March 1993.
3. A. W. Chao, *Coherent Instabilities of a Relativistic Bunches Beam*, Preprint SLAC-PUB-2946, Stanford, 1982.
4. E. Keil and W. Schnell, CERN Report ISR-TH-RF/69-48, 1969.