SSCL-595

SSCL-595

Superconducting Super Collider Laboratory

Data Management and Processing Plan

Department of Applied Geodesy

August 1992

SSCL-595

Data Management and Processing Plan

Department of Applied Geodesy

Superconducting Super Collider Laboratory[8]
2550 Beckleymeade Ave.
Dallas, TX 75237

August 1992

*Operated by the Universities Research Association, Inc., for the U.S. Department of Energy under Contract No. DE–AC35–89ER4486.

CONTENTS

1.0 PURPOSE 1
2.0 SCOPE 1
3.0 ASSUMPTIONS 1
4.0 REQUIREMENTS 1
4.1 A Functional, Automated Data Management System 1
4.1.1 Relational Database Management System 1
4.1.2 Database Interface 2
4.1.3 Software Package Interfaces 3
4.1.4 Application Software 3
4.1.5 Document Management System 4
4.1.6 Bar Code System 5
4.2 A Mature Automated Data Management System 5
4.2.1 Graphical User Interface 5
4.2.2 Database Interface 6
4.2.3 Software Package Interfaces 7
4.2.4 Application Software 7
5.0 RESPONSIBILITIES 7
6.0 IMPLEMENTATION 8
6.1 Phase I Implementation 8
6.2 Phase II Implementation 8
6.3 Phase III Implementation 10
7.0 DAG RESOURCES 10
7.1 Personnel 10
7.2 Relational Database Management System 10
8.0 Costs 10
APPENDIX 11
GLOSSARY 15

FIGURES

6.0-1. Alignment Plan Document Tree 9
A-1. Distance Measurement Entity-Relationship Diagram 12
A-2. Weight Measurement Entity-Relationship Diagram 13
A-3 Point Coordinate Entity-Relationship Diagram 14

1.0 PURPOSE

This plan outlines Data Management and Data Processing requirements of the Department of Applied Geodesy (DAG) and presents the plan to meet these requirements (These requirements are derived from the functional needs of the Department to meet the SSCL alignment tolerances and schedules). In addition, this document presents a schedule for the implementation of this plan. This document is an integral part of the Alignment Plan of the SSCL.

2.0 SCOPE

This plan details a data management and data processing system comprising: a relational database management system; a document management system; application software; and a 3D interactive graphical user interface.

3.0 ASSUMPTIONS

- Computer hardware and software required by this plan will be available when required
- Resources will be available (budget, manpower, *etc.*) as required

4.0 REQUIREMENTS

The DAG requirements for data management and data processing are detailed as follows.

4.1 A Functional, Automated Data Management System

A data management system, created around a relational database, must be available, in a rudimentary, functional form, prior to April 1993. This foundation system is to be used for subsequent phase implementations until the mature information handling system is completed.

4.1.1 Relational Database Management System

The logical and physical models of the relational database must be fully defined. It will provide storage for all graphical and numerical data to be generated and assimilated by DAG. This data is currently identified as follows:

- Numeric Database for the storage of:
  - DAG Geodetic Survey observations
  - DAG Geotechnical observations
  - DAG Calibration Results
  - DAG numerical results from computations (essentially coordinates, tilts and error data)
  - A-E/CM Geodetic Survey observations
  - A-E/CM Geotechnical observations
  - A-E/CM Calibration Results
  - A-E/CM numerical results from computations (essentially coordinates and error data)

- Graphical Database for the storage of:
  - DAG Graphical results from computations (essentially error ellipsoid plots)
  - DAG Site Survey plots
  - DAG report diagrams
  - Simplified design models for experiment and lattice components
  - Digital photographs

Examples of data structures for coordinates and distance observations are given in Appendix A. Design values, and epochs of estimated parameters and their associated observations will be maintained in the database. It is currently anticipated that quantities of data to be stored prior to commissioning of the SSCL will include:

- Quantity **TBD** DAG Geodetic Survey Observations
- Quantity **TBD** DAG Coordinates with associated error data

This database is to be accessed by means of a forms based interface, providing the ability to extract data (with selection fields: date, station name, field crew name, instrument, area of work, and data type) to a scrollable window where additional data may be added or deleted. Data displayed in this window may then be appended to a new or existing file in a pre-specified format.

Data will be accessed and shared at two locations: it is anticipated that the main office space of the DAG will be in the West Campus, with the Detector Alignment Group holding office space in the experimental facilities of the East Campus. Field crews will hold temporary office space in trailers at the location of access shafts to tunnels where survey work is being carried out. Prior to the availability of permanent office space the Department will be located at Central Facility, and in trailers at the West Campus, with the possibility of trailers at the East Campus, and the Detector Alignment Group holding office space at Stoneridge. DAG Desktop Computers (Macintosh, PC, Intergraph Workstation) not located in trailers should be directly linked to the database machine, and have continuous access to data relevant to their group. DAG Desktop Computers located in trailers should at least have access via modem to the database machine.

All DAG field computers (Laptop: Macintosh, PC) and data loggers (Leica-DOS, Paravant-DOS) are to have access to the data management system, via modem, for the upload and download of data.

4.1.2 External Data Requirements

Data required by DAG from other SSCL groups is identified as follows:

- ASD
  - Magnet Pedigrees: Fiducial Coordinates and Magnetic Field in LMCS
  - Magnet/Accelerator Component Designs and Digital Models
  - Support Stand/Adjustment Mechanism Designs and Digital Models
- CCD
  - RTK Survey Data
  - A-E/CM Survey Data
  - GIS Maps
  - Theoretical and "as-built" Drawings and Digital Models of Facilities

- DATABASE **TBD**

  Lattice Coordinates

4.1.3 Software Package Interfaces

A simple, generic, forms based user interface is to be established for the transfer of data between the database, and commercial software packages to be acquired by DAG. These are identified as follows:

- COGO

  A software package for the complete treatment of engineering and topographic surveys
- GPS Data Processing Software

  A software package for the processing and analysis of GPS field measurements
- GEOLAB

  A least squares adjustment software package, equipped to handle GPS observations

4.1.4 Application Software

Application software is to be produced from algorithms generated by DAG Engineers, or from code obtained from other sources and adapted for DAG use. All such software will be fully integrated into the data management and data processing system, and documented in accordance with SSCL policy.

Software which already exists and is to be adapted for DAG use is shown **bold** in the following lists.

Software identified, and the areas of application are as follows:

- Field Data Capture Software[1]

  Optical Tooling, **Theodolite**, **Total Station**, Laser Tracker, **Levelling**, **Geodetic Levelling**, **EDM (standard)**, **Mekometer**, Tape measurements, **Gyro-Theodolite**, **GPS**, Optical Calibration, Calibration Bench (interferometer), Vertical Transfer (x-, y-coordinates), Vertical Transfer (H-coordinate), Astronomical Azimuths, phi/lambda Determinations.
- Upload/Download of Field Data & Data Capture Software

  Optical Tooling, Theodolite, Total Station, Laser Tracker, Levelling, Geodetic Levelling, EDM (standard), Mekometer, Tape measurements, Gyro-Theodolite, GPS, Optical Calibration, Calibration Bench (interferometer), Astronomical Azimuths, phi/lambda Determinations.

---

[1]All field data capture software is to be capable of accepting data input manually. Software for data capture from electronic instruments (Theodolite, Total Station, Laser Tracker, Level, Geodetic Level, EDM, Mekometer, GPS, Calibration Bench Interferometer) is also to permit the direct transfer of observations from the instrument. Different models of an instrument may necessitate different versions of data capture software to accommodate any change in the data transfer protocols.

- Pre-processing of Field Data

  Instrument Corrections: **Theodolite, Total Station**, Laser Tracker, **Levelling, Geodetic Levelling, EDM (standard), Mekometer, Tape measurements, Gyro-Theodolite, GPS**, Vertical Transfer (x-, y-coordinates), Vertical Transfer (H-coordinate), **Astronomical Azimuths, phi/lambda Determinations.**

  Meteorological Corrections: **Total Station, Laser Tracker, Geodetic Levelling, EDM (standard), Mekometer**, Vertical Transfer (H-coordinate), **Astronomical Azimuths, phi/lambda Determinations.**

  Geodetic Corrections: **Theodolite, Total Station, Geodetic Levelling, EDM (standard), Mekometer, Gyro-Theodolite, GPS, Astronomical Azimuths, phi/lambda Determinations.**

- Calculation of Calibration Parameters

  Total Station, Levelling, Geodetic Levelling, EDM (standard), Mekometer, Gyro-Theodolite, Vertical Transfer (H-coordinate).

- **Calculation of Approximate Coordinates**
- Least Squares Coordinate Determinations

  Bundles Adjustment, **Full Adjustment**

- Coordinate Transformations

  Lattice Software, Helmert 2D/3D

- Results Analysis

  Including rudimentary graphical views

- Deformation analysis
- Results Presentation

4.1.5 Document Management System

An electronic master copy of documents generated and assimilated by DAG are to be maintained in a document management system, and a forms based user interface established to this database. The documents to be stored in this system are identified as follows:

- DAG Alignment Plan
- Technical Reference Documents
- InterOffice Memoranda
- Schedules and Work Requests
- Work Progress & Completion Reports

  Accelerator Alignment, Detector Alignment, Facility Engineering

- Coordinate Verification Reports

  Lattice, A-E/CM Contracts

- QA/QC Reports

  Magnet Pedigrees, A-E/CM "As-Built" Surveys, A-E/CM Survey Results, Detector Sub-Systems

4.1.6 Bar Code System

A bar code system is to be used to enhance the implementation of a unique naming system for all Department instrumentation and point locations stored in the database. This system will provide field survey crews an automated link to spatial coordinates, naming schemes and the data attributes, and permit them the rapid retrieval of other data pertaining to facility elements. It will be used to read the bar code identifier of survey instrumentation, survey locations, accelerator components, detector components, for field data capture, and inventory purposes. This information will be transmitted, using radio frequency, to the field computer. All software used for data capture must accept this data from the bar code readers.

4.2 A Mature Automated Data Management System

The data management and data processing system must reach a mature state, and be available for use prior to April 1994.

4.2.1 Graphical User Interface

Access to the database of the mature system is to be through a 3D Graphical User Interface. This interactive interface is to permit the definition of input data for DAG application software, by means of both tabular and graphical representation. Other necessary features of this interface are as follows:

Tabular representation of:

- Observations, classified by type, zone and instrumentation
- Point ID's and Coordinates, classified by type and zone
- Program Input
  - Subset of Observations, classified by type, zone and instrumentation
  - Subset of Point ID's and Coordinates, classified by type and zone
- Program Output
  - Point ID's and coordinates
  - Blunder detection results
  - Statistical error data
  - Displacement Vectors

... with:

- Ability to define input data in a "forms" type interface
- Access to related tables in the data base, *eg.,* instrument calibration data
- Ability to extract and examine further subsets of data
- Shading of data removed from a computation
- Highlighting of erroneous or poorly determined results
- Interactive "real-time" data manipulation of data in tables, with corresponding effect in graphical representation

Graphical representation of:

- Geographical Information System (GIS) 3D/2D Model as "background" for DAG work
  - Including zoom, pan, wire frame, walk through, perspective view, *etc.* capability
  - Permitting the addition of temporary objects to the model
- "Overlay" of any or all (as appropriate) of:
  - Observation lines (classified by type into separate layers)
  - Point Names and coordinates
  - Displacement Vectors
  - Statistical Error data (error ellipsoids/ellipses, pedal curves)
  - Fitting of calibrated (or theoretical) component model to determined coordinates

... with:

- Ability to define input data by selection of regions within the 3D/2D model
- Shading of data removed from a computation
- Highlighting of erroneous or poorly determined results
- Interactive "real-time" data manipulation of data in graphic models with corresponding effect in tabular representation

In both representations, an intelligent interface with capabilities of:

- Automatically removing data directly related to other interactively removed data
- Extracting and presenting data from other databases
- Fortran code compatibility

4.2.2 External Data Requirements

Data required by DAG from other SSCL groups is identified as follows:

- MSD

  Magnet Pedigrees: Fiducial Coordinates and Magnetic Field in LMCS

  Magnet/Accelerator Component Designs and Digital Models
- LTS

  Digital Models of Technical Systems
- PRD

  Detector Designs and Digital Models

  Equipped Experimental Hall Designs and Digital Models

  Equipped Surface Facility Designs and Digital Models

  Digital Models of Installation Process
- Collider Components

  Actual Magnet ID for Specific Lattice Slot Location

In instances where this data (and that in Section 4.1.2) exists in a database, a generic forms based user interface is to be established for the delineation and retrieval of that data.

4.2.3 Software Package Interfaces

A simple, generic, forms based user interface is to be established for the transfer of data between the database and commercial software packages to be acquired by DAG. These are identified as follows:

- PANDA

  A software package for the analysis and interpretation of Geodetic Networks
- INTERGRAPH

4.2.4 Application Software

Additional application software is to be produced from algorithms generated by DAG Engineers, or from code obtained from other sources and adapted for DAG use. All such software will be fully integrated into the data management system, and documented in accordance with SSCL policy.

Software which already exists and is to be adapted for DAG use is shown **bold** in the following lists.

Software currently identified, and the areas of application are as follows:

- Field Data Capture Software

  Distinvar Measurements, Nylon Offsets, Two Color Theodolite, Dual Laser EDM, Geotechnical Observations, Mechanical Measurements, Hydrostatic Levelling.
- Upload/Download of Field Data & Data Capture Software

  Distinvar Measurements, Nylon Offsets, Two Color Theodolite, Dual Laser EDM, Geotechnical Observations, Mechanical Measurements, Hydrostatic Levelling.
- Pre-processing of Field Data

  Instrument Corrections: **Distinvar Measurements**, **Nylon Offsets**, Two Color Theodolite, **Dual Laser EDM**, Geotechnical Observations, Mechanical Measurements, Hydrostatic Levelling.

  Meteorological Corrections: **Dual Laser EDM.**

  Geodetic Corrections: Two Color Theodolite, **Dual Laser EDM,** Hydrostatic Levelling.
- Calculation of Calibration Parameters

  Distinvar Measurements, Nylon Offsets, Dual Laser EDM, Geotechnical Observations, Hydrostatic Levelling.
- Measurement Campaign Analysis
- Calibration Bench Control Software

5.0 RESPONSIBILITIES

The responsibilities for the timely implementation of the data management and processing system are as follows:

Information Services Organization (IS)

- IS will develop milestone schedules with at least 1 milestone per month

- IS will host a Technical Coordination Meeting once per month.
  Minutes of the meeting will be recorded and distributed by IS
  Action Items from the meeting will be recorded.
  Status of action items will be discussed at each meeting

Department of Applied Geodesy

- DAG will make available one member of it's staff to liaise with the IS project team, and all other staff members will devote time to ensure the project team gain adequate knowledge of the Department's activities, and requirements for the Data Management and Processing System.

6.0 IMPLEMENTATION

This plan is one of several parts of the Alignment Plan for the Laboratory, see Figure 6.0-I.

The data management and processing system will be implemented in three phases over a period of 20 months.

The final stages at the completion of each phase will involve hands on use of the system by Department staff, with introductory training from the project team. It is anticipated that several iterations, 'fine tuning' the system will be required.

IS will provide a resource loaded schedule/plan for the implementation, *ie.* cost and number of personnel by task.

6.1 Phase I Implementation

Development by: January '93 Tested & Operational by: March '93

Phase I implementation will take place between July 1992 and January 1993, leaving two months for the 'fine tuning' of the system and permitting Department staff to become acquainted with the system. During these last two months data already gathered by the Department will be loaded into the database.

This phase of the implementation will meet all requirements given in section 4.1 of this document, and will comprise the following tasks:

- Needs Analysis/Project Design (for Phase I)
- Database Design/Creation
- Phase I Implementation/Coding
- Phase I Implementation/Testing

6.2 Phase II Implementation

Developed, Tested & Operational by: November '93

Phase II implementation will take place between April 1993 and November 1993, with the final month set aside for additional 'fine tuning' and training. During this time the foundation system developed in Phase I is to remain fully functional and available for Department use.

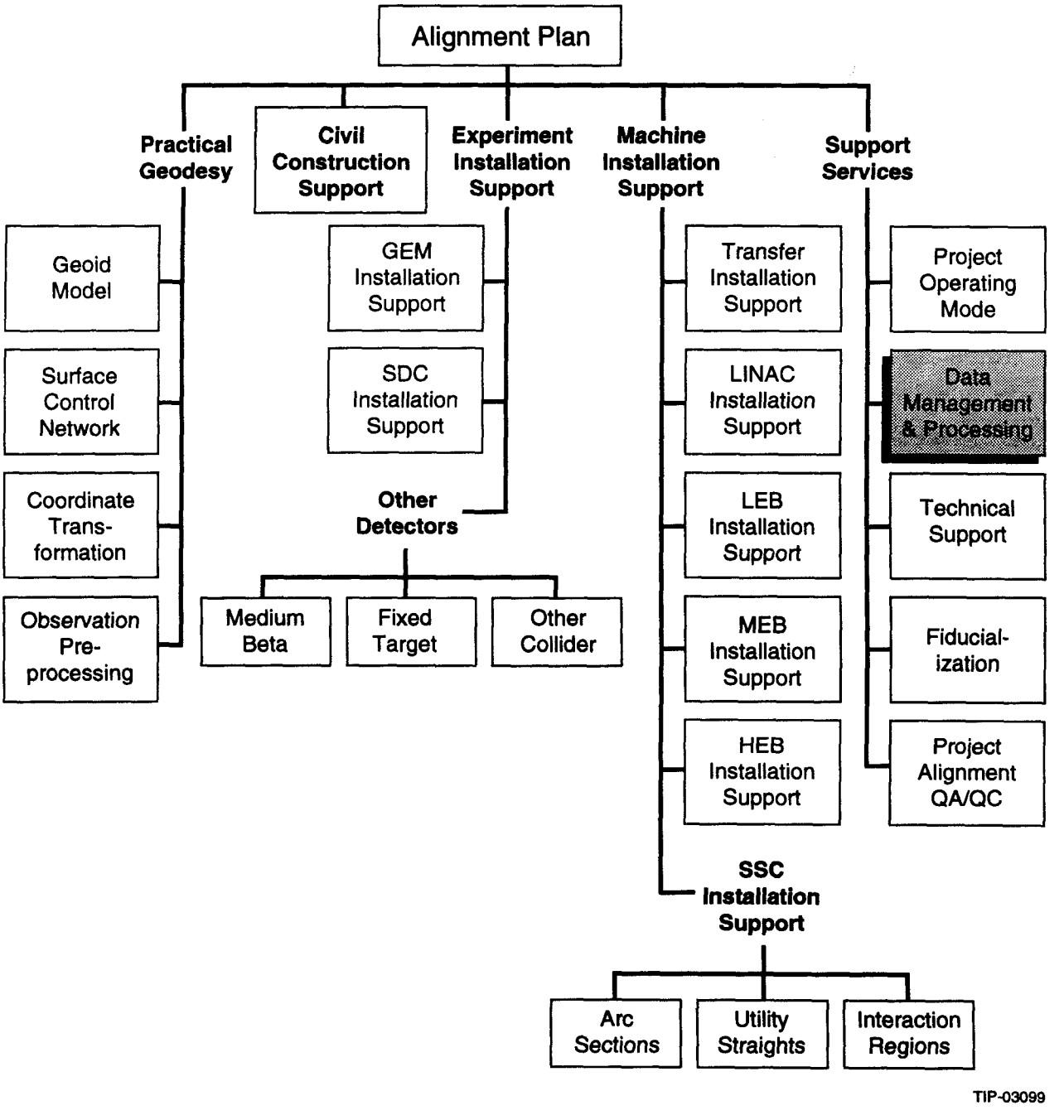

Figure 6.0-1. Alignment Plan Document Tree.

This Phase of the implementation will meet all requirements given in Section 4.2 of this document, except the Graphical User Interface which will remain 2D at this stage. It will comprise the following tasks:

- Project Design (for Phase II)
- Database Updates
- Phase II Implementation/Coding
- Phase II Implementation/Testing

6.3 Phase III Implementation

Developed, Tested & Operational by: April '94

Phase III implementation will take place between December 1993 and April 1994, with the final month set aside for additional 'fine tuning' and training. During this time the foundation system developed in Phases I & II is to remain fully functional and available for Department use.

This Phase of the implementation will add the functionality of a 3D Graphical User Interface to the data management and processing system. It will comprise the following tasks

- Project Design (for Phase III)
- Database Updates
- Phase III Implementation/Coding
- Phase III Implementation/Testing

7.0 DAG RESOURCES

Resources to be acquired by the Department for the implementation of the data management and processing system are detailed below.

7.1 Personnel

The Department will have one FTE Programmer/Analyst starting in FY 1993, who will remain for the duration of the project construction. An additional Programmer/Analyst will be contracted by the department during FY 1993 and FY 1994. These will be fully involved in the development of the data management and processing system and general software maintenance in the department.

7.2 Relational Database Management System

A computer will be purchased for the Relational Database (Specification **TBD**), and a Relational Database Management System will be purchased to run on this machine (System **TBD**).

8.0 COSTS

TABLE 8.0 COST ESTIMATES.

UNIT	COST/$
DATABASE	
RDBMS (Including 7 yr. Maintenance Contract)	**TBD**
Hardware Platform (Including 7 yr. Maintenance Contract)	**TBD**

APPENDIX A

EXAMPLE DATA STRUCTURES

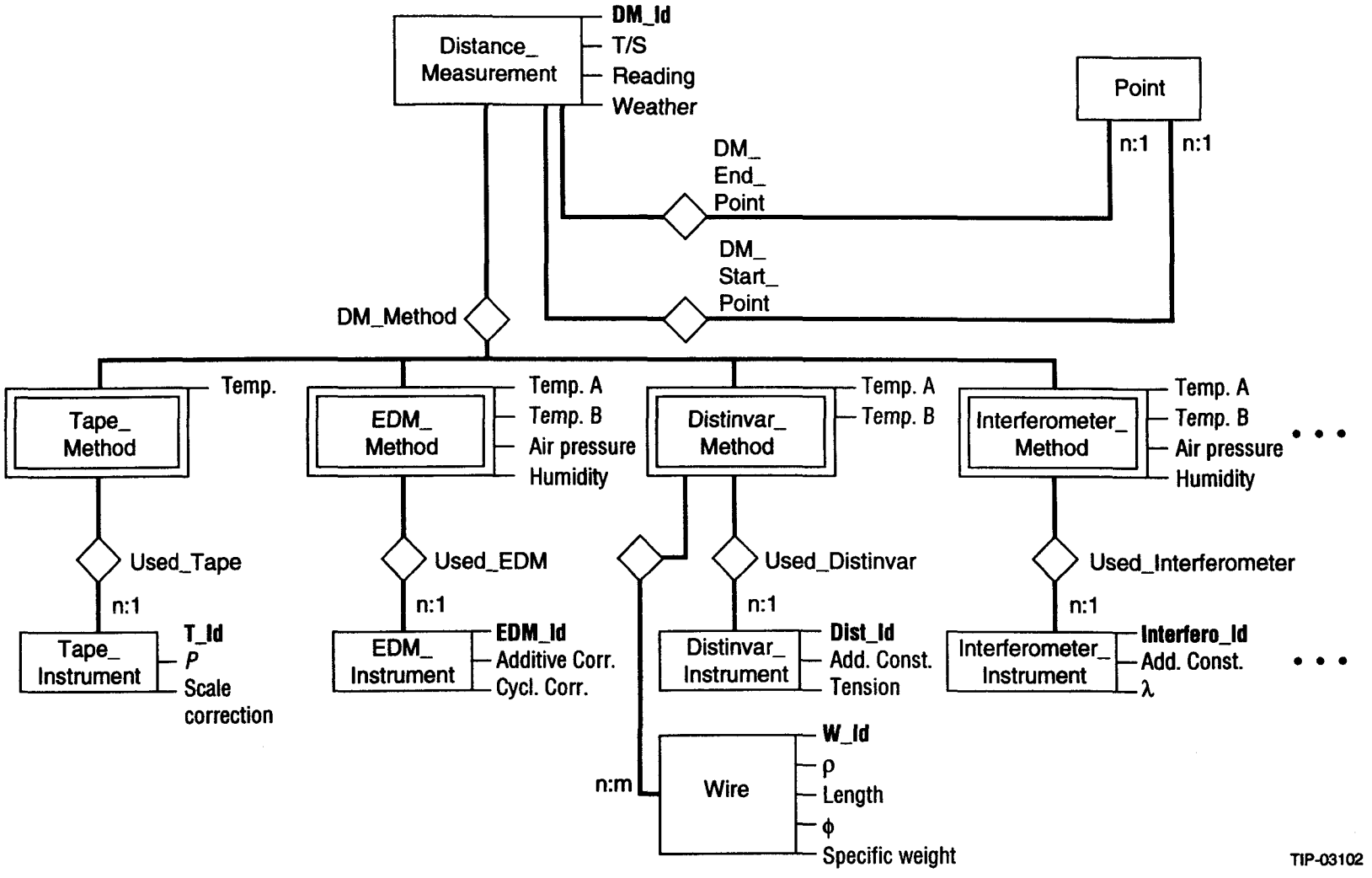

Figure A-1. Distance Measurement Entity-Relationship Diagram.